Verifying that the back-end configuration matches the intended configuration

ONTAP FlexArray

NetApp
March 29, 2022

This PDF was generated from https://docs.netapp.com/us-en/ontap-flexarray/install/reference_reasons_for_no_luns_in_the_array_lun_group.html on March 29, 2022.
Always check docs.netapp.com for the latest.

Table of Contents

Verifying that the back-end configuration matches the intended configuration . . . 1
Reasons for no LUNs in the array LUN group . . . 2
Reasons for fewer array LUN groups than expected . . . 4
Reasons for more array LUN groups than expected . . . 5
Reasons for more paths to an array LUN than expected . . . 7
Reasons for the incorrect number of LUNs in array LUN groups . . . 8
Reasons storage arrays are missing from command output . . . 9

Verifying that the back-end configuration matches the intended configuration

After resolving the back-end configuration errors detected by `storage errors show`, you must check whether the existing back-end configuration matches the configuration you intended, and fix issues arising out of any mismatch.

Steps

1. Enter the following command: `storage array config show`

   The `storage array config show` output groups information about LUN groups, LUN counts, and paths by storage array, as the following example for an HA pair shows:

```
mysystem1::> storage array config show
             LUN   LUN
Node         Group Count  Array Name      Array Target Port   Initiator
------------ ----- ----- ---------------  ------------------  ---------
mysystem1a    0    10     DGC_RAID5_1      5005076303030124       1a
                                           5005076303088124       1b
                                           5005076303130124       1c
                                           5005076303188124       1d
mysystem1b    0    10     DGC_RAID5_1      5005076303030124       1a
                                           5005076303088124       1b
                                           5005076303130124       1c
                                           5005076303188124       1d
8 entries were displayed.
```

2. Check the `storage array config show` output for each problem statement in the following table, and refer to the appropriate information for solution.

If you find this problem…	See this information…
Empty LUN groups	Reasons for no LUNs in the array LUN group
Missing expected storage arrays	Reasons you might not see all storage arrays you expected
More array LUN groups than expected	Reasons for more array LUN groups than expected
Fewer array LUN groups than expected	Reasons for fewer array LUN groups than expected
Array LUN groups do not show the number of LUNs expected	Reasons for the incorrect number of LUNs in array LUN groups
Fewer paths than expected	Fewer than two paths to an array LUN

If you find this problem…	See this information…
More paths than expected	Reasons for more paths to an array LUN than expected

Reasons for no LUNs in the array LUN group

When validating the back-end configuration, you should check the `storage array config show` output to determine whether LUNs are shown in the LUN groups. When the `storage array config show` output shows no LUNs in an array LUN group, ONTAP can see the target port on the fabric but the target port is not presenting array LUNs to ONTAP.

There are a variety of reasons why a target port might not present array LUNs to ONTAP (an *open target port*). The reasons for an open target port can differ between different storage arrays. In addition, the ways to handle the open target port issues differ with storage arrays. For all storage arrays, troubleshooting the cause of an open target port should include checking the storage array configuration, including the host group configuration.

For example, the cause could be an *empty host group*, which presents itself to ONTAP as an open target port. With an empty host group, the host group defines the FC initiator and target ports, but it does not list any array LUNs (that is, the host group is empty).

> The operation of the ONTAP systems is not impacted by an empty host group.

The following illustration represents an open port target port situation and an empty host group situation. (A stand-alone ONTAP system is used in the illustration for simplicity.)

The open target port is caused by missing LUN IDs in the host group definition for storage controller 1A. In the host group definition for storage controller 1A, the FC initiator 0b is zoned into the target port and there is a host group defined for FC initiator port 0b, but there are no LUN IDs in the host group. As the illustration shows, the host group definition for storage controller 2A includes both initiators and LUNs.

The empty host group is caused by array LUNs not getting listed in the host group definition for storage controllers 1B and 2B. The FC initiators 0a and 0d are zoned into the target ports but no LUNs are shown.

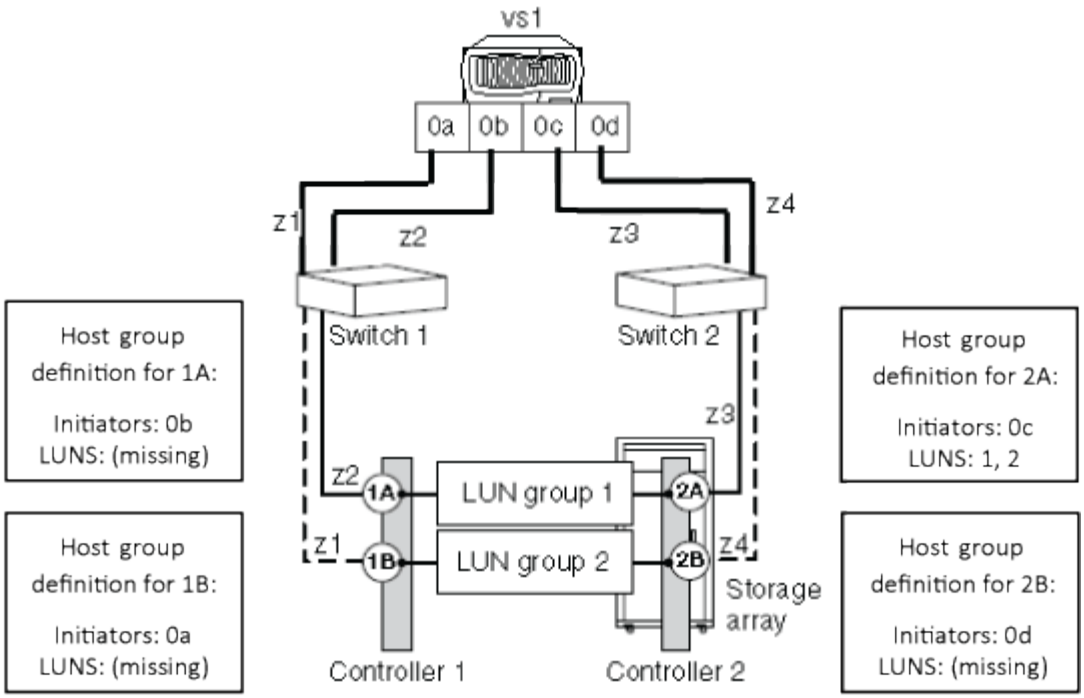

The following example shows the `storage array config show` output for the illustrated situations where the ONTAP system is zoned to the storage array but there are no LUNs in the host group definitions for the storage controller 1A, resulting in an open target port. The controllers 1B and 2B do not have LUNs in their respective host group definitions, resulting in an empty host group.

In the output for the illustrated situations, the FC initiators 0a, 0b, and 0d show no LUNs in the LUN count field. For the FC initiator 0c, two LUNs are shown in LUN group1.

```
cluster-1::> storage array config show
          LUN   LUN
Node      Group Count  Array Name       Array Target Port   Initiator
--------- ----- -----  ------------     ------------------- ---------
vs1
           0     2     EMC_SYMMETRIX_1  50060480000001b0       0c

           1     0     EMC_SYMMETRIX_1  50060480000001a0       0b

           2     0     EMC_SYMMETRIX_1  50060480000001b1       0a

                 0     EMC_SYMMETRIX_1  50060480000001a1       0d

4 entries were displayed.
```

From the output you can determine that the problem is not due to missing FC initiators in the host group. If the FC initiators were missing from the host group, ONTAP would not be able to see the LUN groups having no LUNs.

Reasons for fewer array LUN groups than expected

When validating the back-end configuration, you need to check the `storage array config show` output to determine whether the number of array LUN groups in the output is what you intended.

Explanation

The most likely cause for fewer LUN groups than expected is that the LDEV-to-LUN mapping is the same for both FC initiator port pairs on the ONTAP system. If the LDEV-to-LUN mapping is the same for both FC initiator port pairs, the `storage array config show` output shows one less LUN group than expected.

The following `storage array config show` output shows only one array LUN group due to both FC initiator port pairs being mapped to the same target port pair:

```
mysystem1::> storage array config show

         LUN   LUN
Node     Group Count Array Name  Array Target Ports      Switch Port
Initiator
------   ----- ----- ---------- -------------------      -----------
---------

mysystem1  0     2   DGC_RAID5_1  20:1A:00:a0:b8:0f:ee:04  vnbr200es25:5
0a
                                  20:2A:00:a0:b8:0f:ee:04  vnci9124s53:6
0c
                                  20:1A:00:a0:b8:0f:ee:04  vnbr200es25:5
0b
                                  20:2A:00:a0:b8:0f:ee:04  vnci9124s53:6
0d
```

By looking at the Array Target Ports column, you can see the same target port more than once within the LUN group, and each occurrence has a different initiator.

- Initiators 0a and 0b both have access to storage array port 1A.
- Initiators 0c and 0d both have access to storage array port 2A.

Resolving the issue

ONTAP does not flag this as an error because an ONTAP system can operate when the LDEV-to-LUN mapping is the same for both FC initiator port pairs. However, multiple FC initiators to the same target port is not supported. You should fix the mapping so that your ONTAP system follows a supported configuration, and so that you have the number of LUN groups that you intended.

If you want to fix this issue, do the following:

1. On the storage array, fix the mapping so that the FC initiator port pair mapping is no longer the same for

both FC initiator port pairs on the ONTAP system.

2. On the ONTAP system, run `storage array config show` again and confirm that the number of LUN groups that you expected are shown and that FC initiator port pairs are not accessing the same target ports.

Reasons for more array LUN groups than expected

When validating your configuration, you should check the `storage array config show` output to ensure that the number of LUN groups is what you intended. The most common reason for extra array LUN groups is that the LDEV is spanning target port pairs.

Explanation

Common reasons why you would see more LUN groups than expected are as follows:

- An LDEV is not mapped to a redundant target port pair.

  The most common cause of an extra LUN group is that the LDEV is spanning path pairs. An LDEV is said to be *spanning path pairs* if matching LUN IDs for the LDEV are not presented to a redundant target port pair on the storage array.

> On many storage arrays, it is not possible to present an LDEV to target ports that are not redundant if you follow the conventional process for creating and mapping LDEVs.

- ONTAP is trying to balance the load over the target ports during migration of array LUNs from one LUN group to another.

  In this case, the LDEV spanning path pairs is a transitional state.

- Too many connections are set up.

ONTAP can run with a single array LUN group or multiple array LUN groups. Therefore, ONTAP does not consider any number of LUN groups to be a misconfiguration. However, multiple LUN groups are not supported for all storage arrays in all ONTAP releases. During configuration planning, you should check the information in the Interoperability Matrix to verify whether multiple array LUN groups are supported for the storage arrays used in your ONTAP configuration.

Problem scenario

Assume that there are two existing LUN groups, LUN group 0 and LUN group 1. LUN group 0 has two array LUNs and LUN group 1 has three array LUNs. The administrator created a new LDEV Z, intending to add LUN 3 to LUN group 0. The administrator mapped LDEV Z as LUN 3 on two storage array ports. However, the ports to which LUN 3 are mapped, storage array ports 1A and 2B, are not a redundant target port pair, as the following illustration shows.

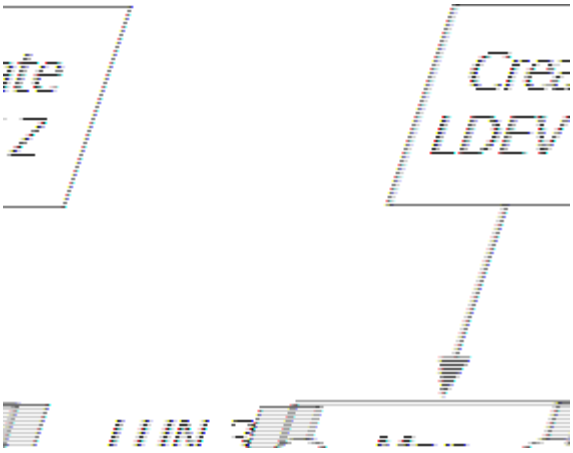

The result of this error is that a third, unintended LUN group is created (Group 2), as the following example shows:

```
mysystem1::> storage array config show

          LUN   LUN
Node      Group Count  Array Name   Array Target Ports      Switch Port
Initiator
-------   ----- ------ -----------  -------------------     -----------
---------

mysystem1  0     3     DGC_RAID5_1  20:1A:00:a0:b8:0f:ee:04  vnbr20es25:5
0a
                                    20:2A:00:a0:b8:0f:ee:04  vnci9124s53:6
0c
           1     3     DGC_RAID5_1  20:1B:00:a0:b8:0f:ee:04  vnbr20es25:7
0b
                                    20:2B:00:a0:b8:0f:ee:04  vnci9124s53:8
0d
           2     1     DGC_RAID5_1  20:1A:00:a0:b8:0f:ee:04  vnbr20es25:5
0a
                                    20:2B:00:a0:b8:0f:ee:04  vnci9124s53:8
0d
```

You can infer from the information in the Array Target Ports column for Groups 0 and 1 that the paths to the array target ports are redundant. Group 0 goes to target ports 1A and 2A, a target port pair. Group 1 goes to 1B and 2B, a different target port pair.

However, the information in the Array Target Ports column for Group 2 suggests that the paths are not redundant. One path goes to target port 1A and the other goes to target port 2B. This is not a redundant target port pair; the array LUN is spanning LUN groups. The array LUN should have been mapped to either 1A and 2A or 1B and 2B.

Because the ONTAP system can run with an LDEV spanning path pairs, the message instructing you to run `storage errors show` does not appear after you run the `storage array config show` command. However, this is not a best practice configuration.

Resolving the issue

1. Wait for one minute, then run `storage array config show` again to see whether the extra LUN group is still shown in the `storage array config show` output.
   - If the extra LUN group is no longer in the output, you can conclude that the issue was transitional.
   - If the extra LUN group still appears in the output, the storage array administrator must remap the LDEV, as documented in the next steps.

     You need to maintain redundancy while fixing this problem. This procedure instructs you to map the LDEV to the correct target port *before* removing the mapping to the incorrect target port. Redundancy is maintained in this case because you are increasing the number of paths to three, temporarily, instead of decreasing the number of paths to one while you are fixing the problem.
2. Decide which of the inconsistent target ports should be remapped.
3. On the storage array, map the LDEV to the new (correct) target port.
4. In ONTAP, run `storage array config show` to confirm that three paths are shown.
5. Remove the incorrect mapping.
6. Wait for one minute while ONTAP discovers the LUN.
7. In ONTAP, run `storage array config show` again to make sure that the extra LUN group is gone.

Related information

NetApp Interoperability Matrix Tool

Reasons for more paths to an array LUN than expected

The primary reasons for an unexpected additional path to an array LUN are zoning issues and too many cables. Three paths to an array LUN is not best practice, but you are not required to fix this issue.

Example of storage array config show output

The FC initiator port pair on the ONTAP system is 0a and 0c. The following example shows an extra path, 0b, in the `storage array config show` output:

```
mysystem1::> storage array config show
             LUN   LUN
Node         Group Count   Array Name       Array Target Port   Initiator
----------   ----- -----  ----------------  ------------------  ----------
mysystem1a    1     3     HITACHI_DF600F_1  50060e80004291c0    0a
                                            50060e80004291c1    0b
                                                                0c

3 entries were displayed.
```

If an initiator in the `storage array config show` output is not preceded by an array target port, the initiator is connecting to the same array target port as the initiator above it.

Explanation

Three paths within a LUN group indicates that there is an extra path. For ONTAP configurations, the best practice is two or four paths.

Reasons there could be more paths than expected include the following:

- More cables were connected than are needed.
- A zoning configuration error caused an extra path.

Resolving the issue

Having an extra path is not a best practice, but it is not incorrect from the system perspective. You do not have to fix this issue. If you want to fix the issue to align with your intended configuration, complete the following steps:

1. Check your cabling and the zoning configuration for the cause, and then fix the issue that is causing the extra path.
2. After the issue is fixed, run `storage array config show` again to confirm that the extra path is gone.

Reasons for the incorrect number of LUNs in array LUN groups

When validating your configuration, you should check the `storage array config show` output to ensure that the number of LUNs in each LUN group is what you intended. The most likely cause for the incorrect number of LUNs in a LUN group is that the array LUN is not mapped to an ONTAP system.

Example of storage array config show output

The number of array LUNs in each LUN group appears in the `storage array config show` output, as the following example shows:

```
mysystem1::> storage array config show

                LUN     LUN
Node            Group   Count Array Name     Array Target Port  Initiator
------          ------ ----- -------------- -------------------- ----------
mysystem1         0      50   DGC_RAID5_1     201A00a0b80fee04     0a
                                              202A00a0b80fee04     0c
```

Explanation

The most likely reasons that an array LUN you expected to be in a LUN group is missing are as follows:

- The array LUN is not mapped to the ONTAP system.
- A mapping error is made that resulted in the array LUN being in the wrong LUN group.

  For example, the host group configuration might be incorrect.

- The storage array is still in the process of initializing and making the array LUNs available (transitional state).
- The ONTAP LUN scanner has not yet discovered the LUNs (transitional state).

Resolving the issue

1. If the array LUN has not been mapped to the ONTAP system, the storage array administrator has to map it.

   The process for mapping array LUNs to hosts varies among storage arrays.

2. If the array LUN has been mapped to the ONTAP system, check zoning and the host group configuration.
3. After the issue is fixed, run `storage array config show` again to confirm that the issue is fixed.

Reasons storage arrays are missing from command output

A storage array that is not connected to the ONTAP system does not appear in the `storage array config show` output. Problems with cabling, zoning, and host group configuration can prevent a connection between the two devices.

Resolving the issue

1. Check cabling, host group configuration, and zoning as follows:
   - Check that cables are connected.
   - Check that the WWPNs for the FC initiators on the ONTAP systems are in the host group.
   - Check that both the storage array and the FC initiator are in the same zone.
2. After the problem is fixed, run `storage array config show` in ONTAP to confirm that the issue was fixed.

Copyright Information

Copyright © 2022 NetApp, Inc. All rights reserved. Printed in the U.S. No part of this document covered by copyright may be reproduced in any form or by any means-graphic, electronic, or mechanical, including photocopying, recording, taping, or storage in an electronic retrieval system- without prior written permission of the copyright owner.

Software derived from copyrighted NetApp material is subject to the following license and disclaimer:

THIS SOFTWARE IS PROVIDED BY NETAPP “AS IS” AND WITHOUT ANY EXPRESS OR IMPLIED WARRANTIES, INCLUDING, BUT NOT LIMITED TO, THE IMPLIED WARRANTIES OF MERCHANTABILITY AND FITNESS FOR A PARTICULAR PURPOSE, WHICH ARE HEREBY DISCLAIMED. IN NO EVENT SHALL NETAPP BE LIABLE FOR ANY DIRECT, INDIRECT, INCIDENTAL, SPECIAL, EXEMPLARY, OR CONSEQUENTIAL DAMAGES (INCLUDING, BUT NOT LIMITED TO, PROCUREMENT OF SUBSTITUTE GOODS OR SERVICES; LOSS OF USE, DATA, OR PROFITS; OR BUSINESS INTERRUPTION) HOWEVER CAUSED AND ON ANY THEORY OF LIABILITY, WHETHER IN CONTRACT, STRICT LIABILITY, OR TORT (INCLUDING NEGLIGENCE OR OTHERWISE) ARISING IN ANY WAY OUT OF THE USE OF THIS SOFTWARE, EVEN IF ADVISED OF THE POSSIBILITY OF SUCH DAMAGE.

NetApp reserves the right to change any products described herein at any time, and without notice. NetApp assumes no responsibility or liability arising from the use of products described herein, except as expressly agreed to in writing by NetApp. The use or purchase of this product does not convey a license under any patent rights, trademark rights, or any other intellectual property rights of NetApp.

The product described in this manual may be protected by one or more U.S. patents, foreign patents, or pending applications.

RESTRICTED RIGHTS LEGEND: Use, duplication, or disclosure by the government is subject to restrictions as set forth in subparagraph (c)(1)(ii) of the Rights in Technical Data and Computer Software clause at DFARS 252.277-7103 (October 1988) and FAR 52-227-19 (June 1987).

Trademark Information

NETAPP, the NETAPP logo, and the marks listed at http://www.netapp.com/TM are trademarks of NetApp, Inc. Other company and product names may be trademarks of their respective owners.