Supported direct-attached configurations with E-Series storage arrays

ONTAP FlexArray

netapp-chikkusu
July 27, 2021

This PDF was generated from https://docs.netapp.com/us-en/ontap-flexarray/implement-e-series/reference_supported_direct_attached_configurations_for_e_series_storage_arrays.html on October 26, 2021. Always check docs.netapp.com for the latest.

Table of Contents

Supported direct-attached configurations with E-Series storage arrays 1
Stand-alone basic configuration 1
Four-port array LUN group 2
Eight-port array LUN group 3

Supported direct-attached configurations with E-Series storage arrays

You can connect ONTAP systems in direct-attached configurations with E-Series storage arrays. You must verify redundancy in connections between the ONTAP systems and the storage arrays to avoid the possibility of a single point of failure. FlexArray Stretch MetroCluster supports direct-attached configurations with E-Series storage arrays. For more information see, Interoperability Matrix and *Stretch MetroCluster Installation and Configuration Guide*

The Interoperability Matrix contains information about the specific E-Series array models that are supported in direct-attached configurations with ONTAP system.

ONTAP supports the following direct-attached configurations with E-Series storage arrays:

Stand-alone basic configuration

In a stand-alone basic configuration, two FC initiator ports from the ONTAP system access the ports of a two-port array LUN group.

The following illustration shows a direct-attached configuration where the ONTAP FC initiator ports 0a and 0h access the target ports of a two-port array LUN group:

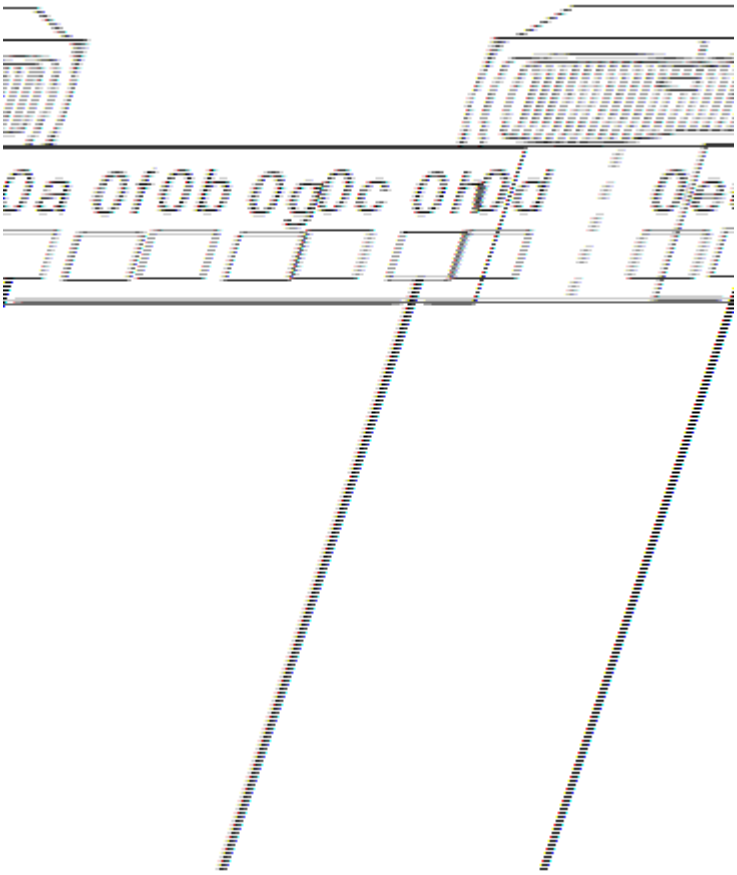

Four-port array LUN group

Two FC initiator ports from each ONTAP system in an HA pair access different storage array ports in a four-port array LUN group for redundancy in connections.

The following illustration shows a direct-attached configuration where the ONTAP FC initiator ports access the target ports of a four-port array LUN group.

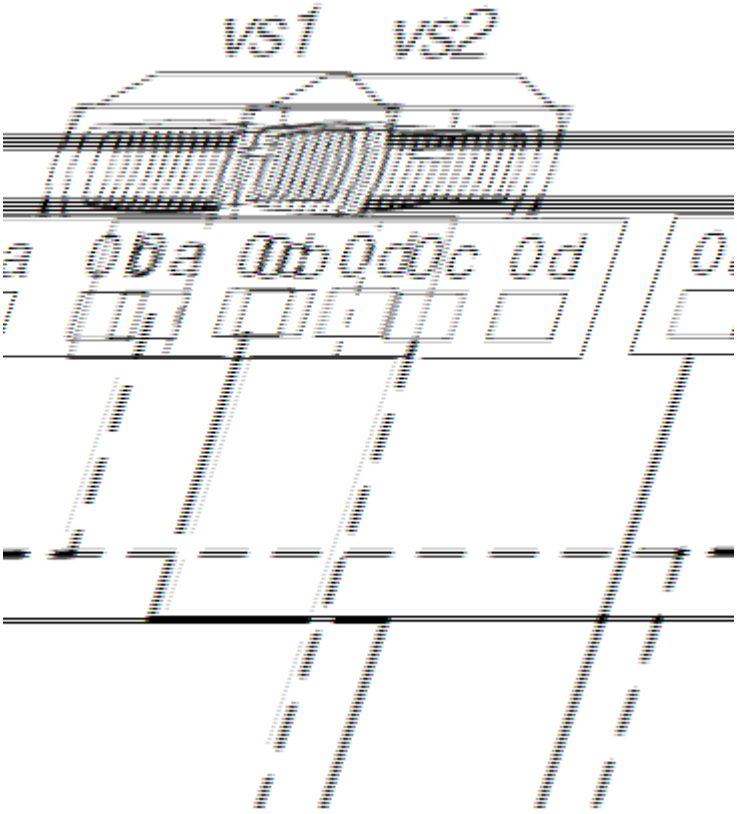

You can also connect four FC initiator ports from each ONTAP system in the HA pair to two different four-port array LUN groups such that each FC initiator port in a port pair accesses the alternate LUN group.

The following illustration shows a direct-attached configuration where the ONTAP FC initiator ports access the target ports of two four-port array LUN groups:

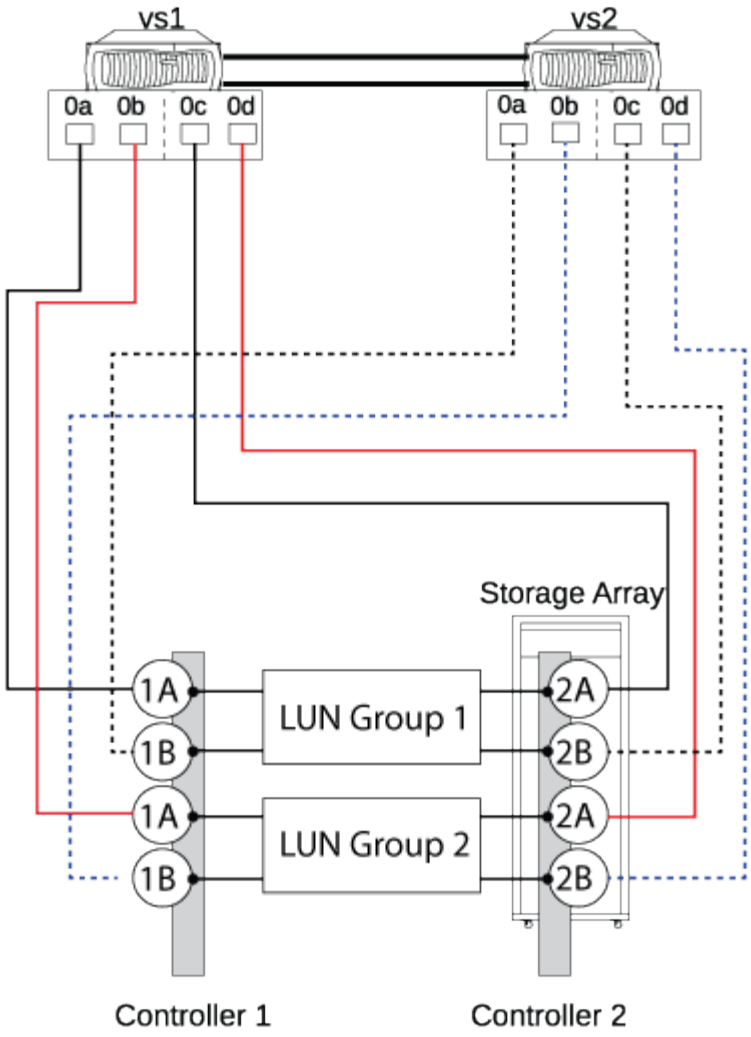

Eight-port array LUN group

Four FC initiator ports from each ONTAP system in an HA pair access different storage array ports in an eight-port array LUN group for redundancy in connections.

The following illustration shows a direct-attached configuration where the ONTAP FC initiator ports access the target ports of an eight-port array LUN group:

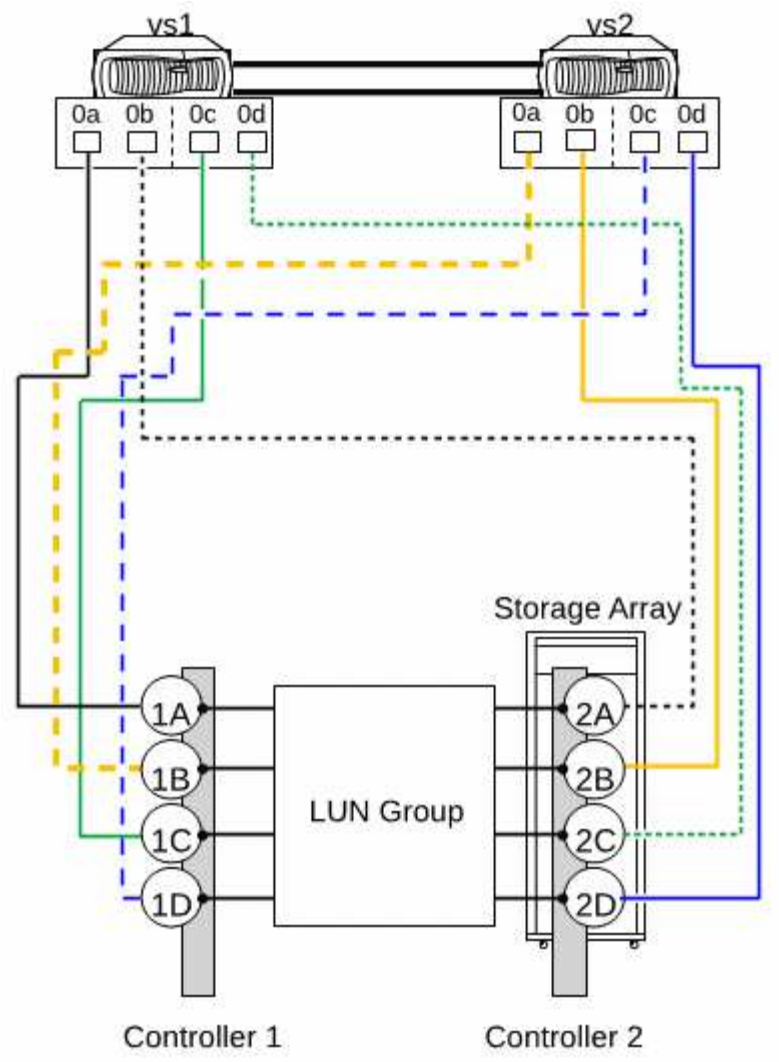

Related information

NetApp Interoperability Matrix Tool

Stretch MetroCluster installation and configuration

Copyright Information

Copyright © 2021 NetApp, Inc. All rights reserved. Printed in the U.S. No part of this document covered by copyright may be reproduced in any form or by any means-graphic, electronic, or mechanical, including photocopying, recording, taping, or storage in an electronic retrieval system- without prior written permission of the copyright owner.

Software derived from copyrighted NetApp material is subject to the following license and disclaimer:

THIS SOFTWARE IS PROVIDED BY NETAPP “AS IS” AND WITHOUT ANY EXPRESS OR IMPLIED WARRANTIES, INCLUDING, BUT NOT LIMITED TO, THE IMPLIED WARRANTIES OF MERCHANTABILITY AND FITNESS FOR A PARTICULAR PURPOSE, WHICH ARE HEREBY DISCLAIMED. IN NO EVENT SHALL NETAPP BE LIABLE FOR ANY DIRECT, INDIRECT, INCIDENTAL, SPECIAL, EXEMPLARY, OR CONSEQUENTIAL DAMAGES (INCLUDING, BUT NOT LIMITED TO, PROCUREMENT OF SUBSTITUTE GOODS OR SERVICES; LOSS OF USE, DATA, OR PROFITS; OR BUSINESS INTERRUPTION) HOWEVER CAUSED AND ON ANY THEORY OF LIABILITY, WHETHER IN CONTRACT, STRICT LIABILITY, OR TORT (INCLUDING NEGLIGENCE OR OTHERWISE) ARISING IN ANY WAY OUT OF THE USE OF THIS SOFTWARE, EVEN IF ADVISED OF THE POSSIBILITY OF SUCH DAMAGE.

NetApp reserves the right to change any products described herein at any time, and without notice. NetApp assumes no responsibility or liability arising from the use of products described herein, except as expressly agreed to in writing by NetApp. The use or purchase of this product does not convey a license under any patent rights, trademark rights, or any other intellectual property rights of NetApp.

The product described in this manual may be protected by one or more U.S. patents, foreign patents, or pending applications.

RESTRICTED RIGHTS LEGEND: Use, duplication, or disclosure by the government is subject to restrictions as set forth in subparagraph (c)(1)(ii) of the Rights in Technical Data and Computer Software clause at DFARS 252.277-7103 (October 1988) and FAR 52-227-19 (June 1987).

Trademark Information

NETAPP, the NETAPP logo, and the marks listed at http://www.netapp.com/TM are trademarks of NetApp, Inc. Other company and product names may be trademarks of their respective owners.