Supported fabric-attached configurations for E-Series storage arrays

ONTAP FlexArray

NetApp
October 26, 2021

This PDF was generated from https://docs.netapp.com/us-en/ontap-flexarray/implement-e-series/concept_stand_alone_basic_configuration.html on October 26, 2021. Always check docs.netapp.com for the latest.

Table of Contents

Supported fabric-attached configurations for E-Series storage arrays . . . 1
Stand-alone basic configuration . . . 1
Stand-alone system with two 2-port array LUN groups . . . 1
Single 4-port array LUN group configuration . . . 2
Two 4-port array LUN group configuration . . . 3
Eight-port array LUN group configuration . . . 4
Attaching FC initiator port to multiple targets ports . . . 6
Sharing a target port with two FC initiator ports . . . 7

Supported fabric-attached configurations for E-Series storage arrays

You can connect only certain E-Series storage arrays in fabric-attached configurations with ONTAP systems

The Interoperability Matrix contains additional information about specific array models.

Related information

NetApp Interoperability Matrix Tool

Stand-alone basic configuration

The stand-alone basic configuration of an ONTAP system that uses array LUNs is a simple, fabric-attached configuration with a single FC initiator port pair accessing a single LUN group.

This configuration is supported for use with all storage arrays listed in the Interoperability Matrix as supported for the release of ONTAP running on your system.

The following illustration shows this configuration:

Related information

NetApp Interoperability Matrix Tool

Stand-alone system with two 2-port array LUN groups

In a stand-alone ONTAP system that is in a fabric-attached simple configuration, each FC initiator port pair present on the ONTAP system accesses a separate array LUN group.

This configuration is supported for use with all storage arrays listed in the Interoperability Matrix as supported for the release of ONTAP running on your system.

The following illustration shows fabric-attached simple configuration:

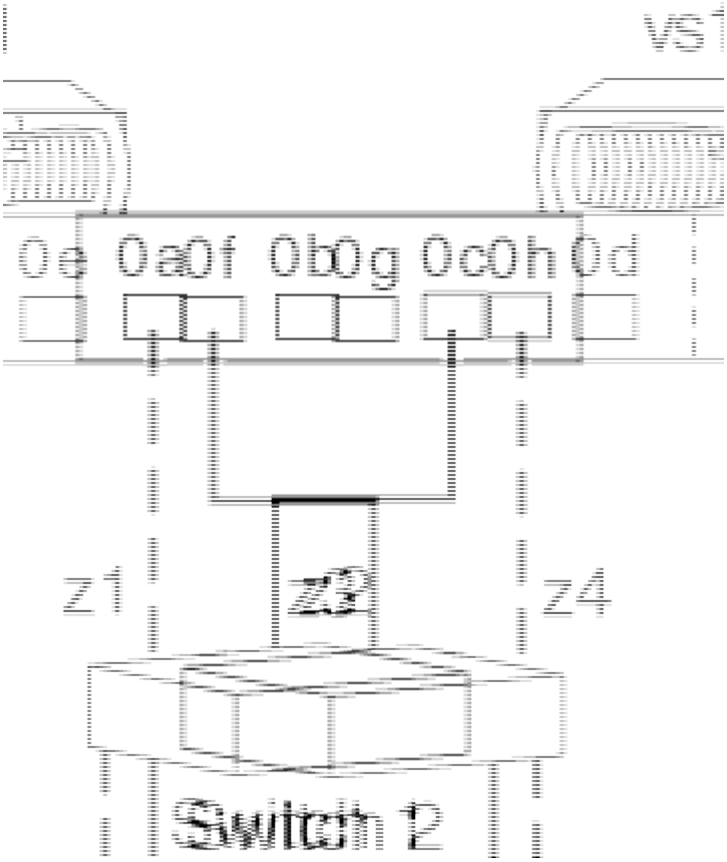

Related information

NetApp Interoperability Matrix Tool

Single 4-port array LUN group configuration

This configuration contains a single, 4-port LUN group with each target port accessed by a single ONTAP FC initiator port from the HA pair. Due to zoning, only two paths are allowed to a specific array LUN from each of the ONTAP system.

This configuration is supported for use with all storage arrays listed in the Interoperability Matrix as supported for the release of ONTAP running on your system.

The following illustration shows this configuration:

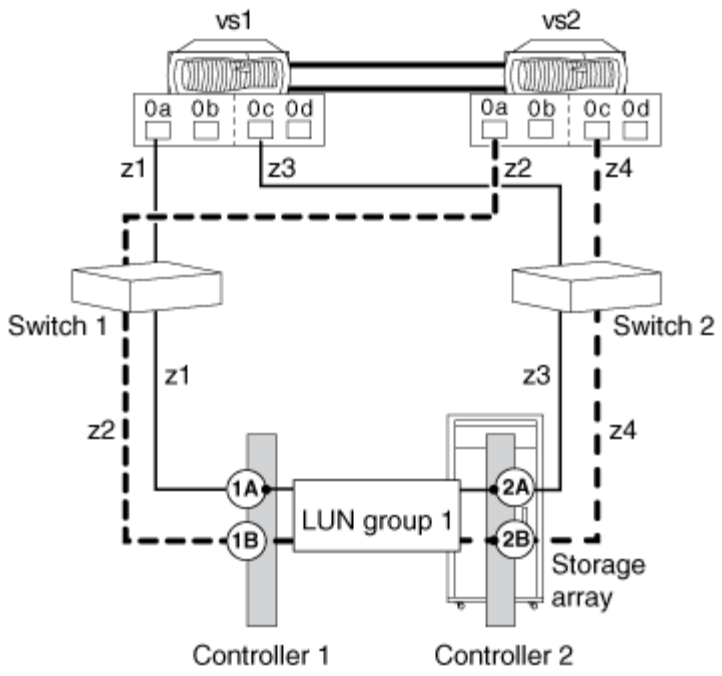

Related information

NetApp Interoperability Matrix Tool

Two 4-port array LUN group configuration

In this configuration, each ONTAP FC initiator port pair accesses a separate array LUN group. The zoning is a single ONTAP FC initiator to a single array target port.

This configuration is supported for use with all storage arrays listed in the Interoperability Matrix as supported for the release of ONTAP running on your system.

The following illustration shows a block diagram of this configuration:

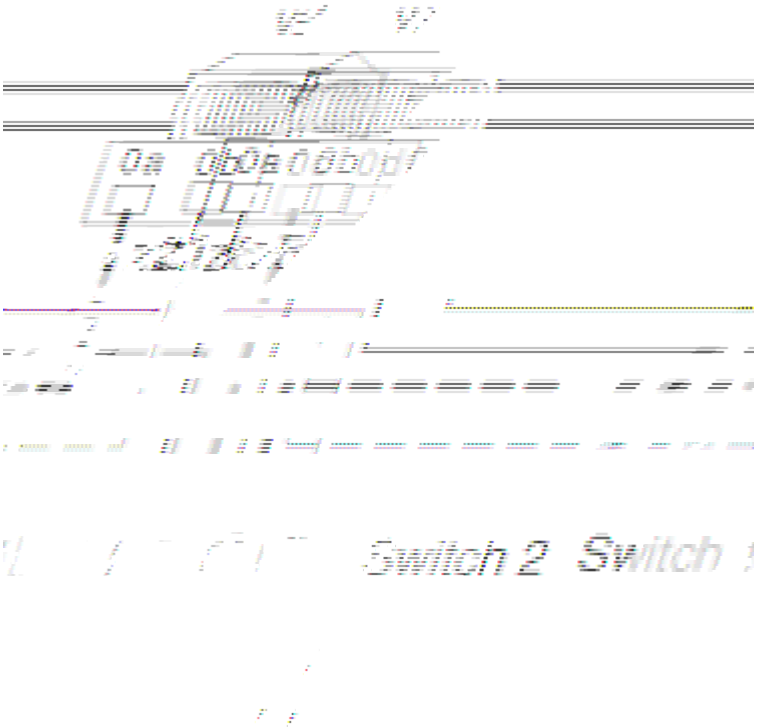

Related information

NetApp Interoperability Matrix Tool

Eight-port array LUN group configuration

An eight-port LUN group configuration is supported on clustered V-Series systems and on ONTAP systems that can use array LUNs.

This configuration is supported for use with all storage arrays listed in the Interoperability Matrix as supported for the release of ONTAP running on your system.

There are two ways of deploying this configuration: crossed and uncrossed back-end connections.

Crossed back-end connections

In this configuration with the back-end connections crossed, the FC connections from the same storage array controller go to both fabric switches (redundant).

In this illustration of crossed back-end connections, note how the nodes are attached to the switches and to the storage array. Vs1 uses switch 1 when attaching to the storage array Controller 1 port 1A and Controller 2 port 2C, and uses switch 2 when attaching to storage array Controller 2 ports 2A and Controller 1 port 1C. This optimizes the use of switch ports and array ports, which reduces the impact of a switch or storage array controller failure.

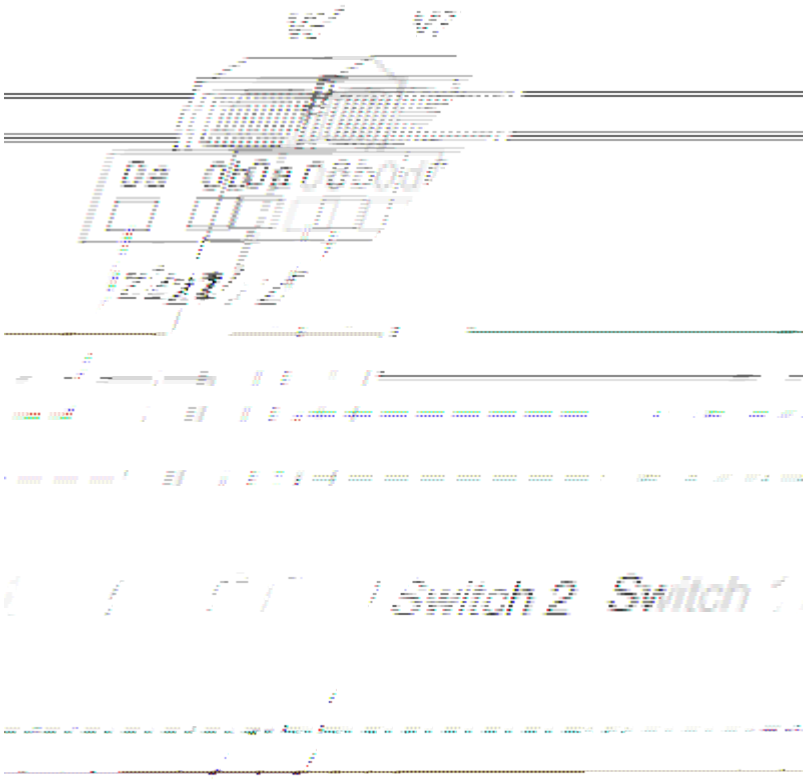

Back-end connections are not crossed

In this configuration in which the back-end connections are not crossed, the FC connections from the same storage array controller go to only one fabric switch.

The following illustration shows this configuration when the back-end connections are not crossed.

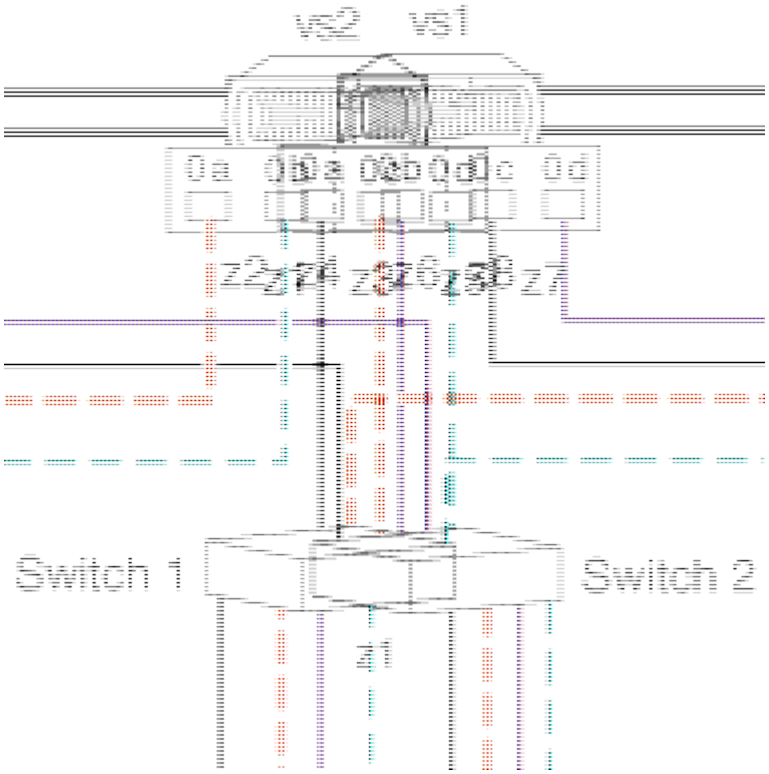

Related information

NetApp Interoperability Matrix Tool

Attaching FC initiator port to multiple targets ports

You can connect an FC initiator port on an ONTAP system to multiple target ports on separate storage arrays within the same family. This configuration is supported with MetroCluster configurations in ONTAP.

ONTAP supports sharing an FC initiator port with multiple target ports in both HA pairs and in stand-alone systems. This configuration is supported for use with all storage arrays listed in the Interoperability Matrix as supported for the release of ONTAP running on your system.

> For details about sharing an FC initiator port with multiple target ports and zoning, see the information in the *FlexArray Virtualization Installation Requirements and Reference*

Single ONTAP FC initiator port connecting to target ports on separate storage arrays

The following example shows an HA pair in which a single ONTAP FC initiator port connects to multiple target ports on different storage arrays:

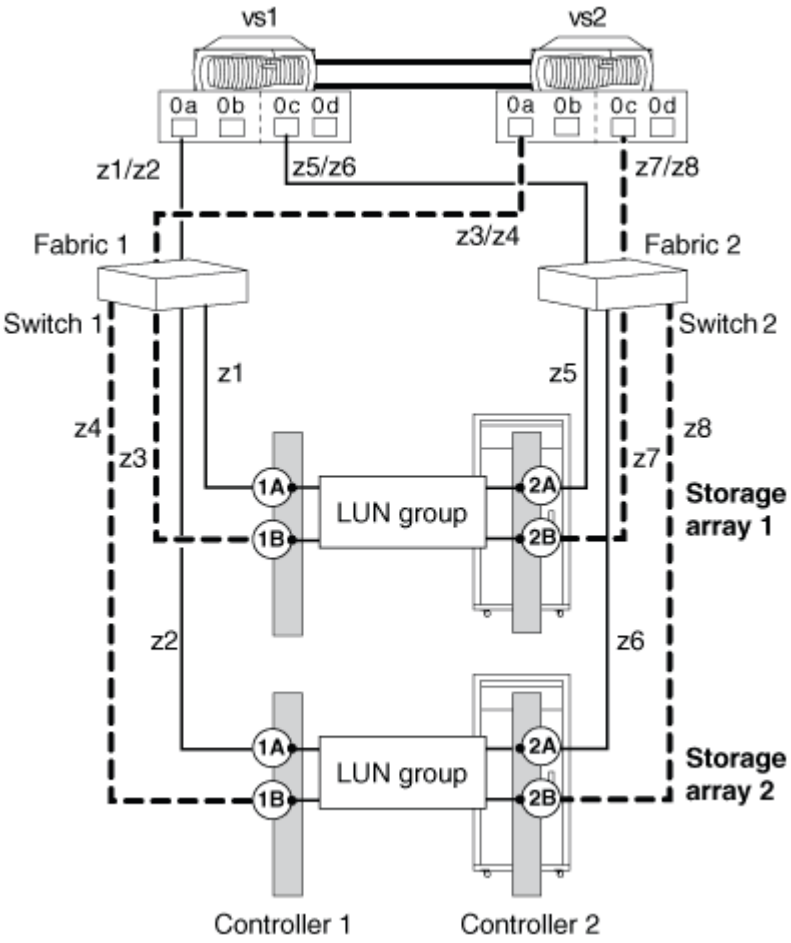

Related information

NetApp Interoperability Matrix Tool

FlexArray virtualization installation requirements and reference

Fabric-attached MetroCluster installation and configuration

Sharing a target port with two FC initiator ports

A maximum of two ONTAP FC initiator ports across nodes can be attached to a single target port on the storage array. This configuration is supported with MetroCluster configurations in ONTAP.

This configuration is supported for use with all storage arrays listed in the Interoperability Matrix as supported for the release of ONTAP running on your system.

The following illustration shows a shared target port configuration with an HA pair. Sharing a target port with two FC initiator ports is supported with both stand-alone systems and HA pairs.

> For details about sharing an FC initiator port with multiple target ports and zoning, see the *FlexArray Virtualization Installation Requirements and Reference*

Shared target port attached to FC initiator ports

The following example shows an HA pair in which a single target port connects to two FC initiator ports:

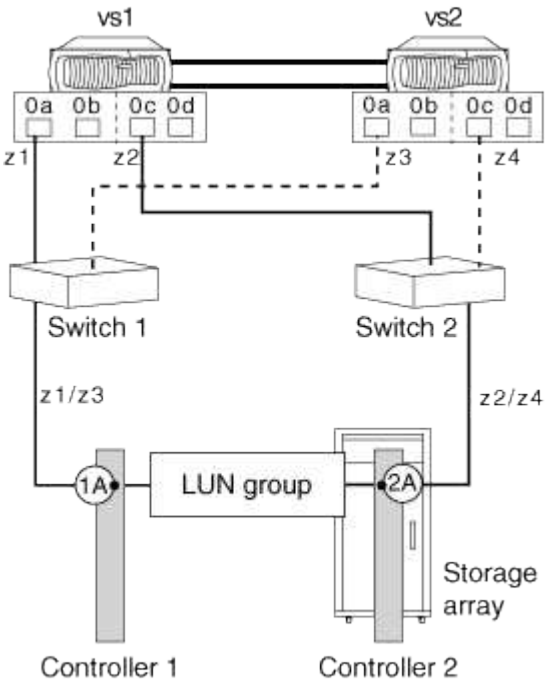

The initiator ports 0a of controllers vs1 and vs2 are connected to the storage array port 1A and ports 0c of the controllers are connected to the storage array port 2A.

Related information

NetApp Interoperability Matrix Tool

Copyright Information

Copyright © 2021 NetApp, Inc. All rights reserved. Printed in the U.S. No part of this document covered by copyright may be reproduced in any form or by any means-graphic, electronic, or mechanical, including photocopying, recording, taping, or storage in an electronic retrieval system- without prior written permission of the copyright owner.

Software derived from copyrighted NetApp material is subject to the following license and disclaimer:

THIS SOFTWARE IS PROVIDED BY NETAPP “AS IS” AND WITHOUT ANY EXPRESS OR IMPLIED WARRANTIES, INCLUDING, BUT NOT LIMITED TO, THE IMPLIED WARRANTIES OF MERCHANTABILITY AND FITNESS FOR A PARTICULAR PURPOSE, WHICH ARE HEREBY DISCLAIMED. IN NO EVENT SHALL NETAPP BE LIABLE FOR ANY DIRECT, INDIRECT, INCIDENTAL, SPECIAL, EXEMPLARY, OR CONSEQUENTIAL DAMAGES (INCLUDING, BUT NOT LIMITED TO, PROCUREMENT OF SUBSTITUTE GOODS OR SERVICES; LOSS OF USE, DATA, OR PROFITS; OR BUSINESS INTERRUPTION) HOWEVER CAUSED AND ON ANY THEORY OF LIABILITY, WHETHER IN CONTRACT, STRICT LIABILITY, OR TORT (INCLUDING NEGLIGENCE OR OTHERWISE) ARISING IN ANY WAY OUT OF THE USE OF THIS SOFTWARE, EVEN IF ADVISED OF THE POSSIBILITY OF SUCH DAMAGE.

NetApp reserves the right to change any products described herein at any time, and without notice. NetApp assumes no responsibility or liability arising from the use of products described herein, except as expressly agreed to in writing by NetApp. The use or purchase of this product does not convey a license under any patent rights, trademark rights, or any other intellectual property rights of NetApp.

The product described in this manual may be protected by one or more U.S. patents, foreign patents, or pending applications.

RESTRICTED RIGHTS LEGEND: Use, duplication, or disclosure by the government is subject to restrictions as set forth in subparagraph (c)(1)(ii) of the Rights in Technical Data and Computer Software clause at DFARS 252.277-7103 (October 1988) and FAR 52-227-19 (June 1987).

Trademark Information

NETAPP, the NETAPP logo, and the marks listed at http://www.netapp.com/TM are trademarks of NetApp, Inc. Other company and product names may be trademarks of their respective owners.