Planning a port-to-port connectivity scheme

ONTAP FlexArray

NetApp
February 17, 2022

This PDF was generated from https://docs.netapp.com/us-en/ontap-flexarray/install/concept_requirements_for_v_series_fc_initiator_port_usage.html on February 17, 2022.
Always check docs.netapp.com for the latest.

Table of Contents

Planning a port-to-port connectivity scheme . . . 1
Requirements for using FC initiator ports . . . 1
How FC initiator ports are labeled . . . 1
Configuring FC ports as initiators . . . 2
Rules for sharing an FC initiator port with multiple target ports . . . 3
Example configuration: shared FC initiator ports . . . 4
Rules for sharing a target port with multiple FC initiator ports . . . 8
Example configuration: shared target ports . . . 8
Checking the number of array LUNs visible on an FC initiator port . . . 9
Requirements for connecting to storage arrays . . . 10
Guidelines for connecting a V-Series system to native disk shelves . . . 11
FC initiator ports required for connection to native disks . . . 12
Example of non-optimized usage of a storage array target port . . . 12

Planning a port-to-port connectivity scheme

Planning connectivity between the FC initiator ports on ONTAP systems and storage array ports includes determining how to achieve redundancy and meeting requirements for the number of paths to an array LUN.

Requirements for using FC initiator ports

If you want to use FC initiator ports in an ONTAP configuration with array LUNs, you must follow specific requirements for port pair redundancy, port settings for HBAs, connecting to target ports, array LUN limits, and connecting to different storage and devices.

For this feature…	The requirements are…
Port pair redundancy	You must use redundant FC initiator port pairs while connecting an ONTAP system to array LUNs.
Port setting for HBAs	You must set all the HBAs used to access disks or array LUNs as *initiator* ports.
Connecting to storage array target ports	You can connect the same FC initiator port to multiple target ports on the storage array. You can connect a maximum of two FC initiator ports to a single target port.
Array LUN limits	There are limits on how many array LUNs can be visible over an FC initiator port. These limits vary with ONTAP releases.
Connecting to different storage and devices	You must use a separate FC initiator port to connect the ONTAP system to each of the following: • Disk shelves • Array LUNs • Tape devices If the ONTAP system does not have enough internal ports for your requirement, you must order an additional HBA.

How FC initiator ports are labeled

All FC initiator ports on ONTAP systems are identified by a number and a letter. Labeling differs depending on whether the ports are on the motherboard or cards in expansion slots.

- Port numbering on the motherboard

  Ports are numbered 0a, 0b, 0c, 0d…

- Port numbering on expansion cards

  Ports are numbered according to the slot in which the expansion card is installed. A card in slot 3 yields ports 3A and 3B.

  The FC initiator ports are labeled 1 and 2. However, the software refers to them as A and B. You see these labels in the user interface and system messages displayed on the console.

Configuring FC ports as initiators

You can configure individual FC ports as initiators on ONTAP systems. The initiator mode enables the ports to connect to storage arrays.

Steps

1. **Optional:** If the adapter port already has LIFs configured, delete all the LIFs by using the `network interface delete` command.

   If the LIF is in a port set, you must remove the LIF from port set before you can delete the LIF.

   The following example shows how you can delete LIFs on an SVM vs3: `network interface delete -vserver vs3 -lif lif2,lif0`

2. Take the port offline by using the `network fcp adapter modify` command.

   The following example shows how you can take the port 0c offline for the node sysnode: `network fcp adapter modify -node sysnode1 -adapter 0c -state down`

3. Use the `system hardware unified-connect modify` command to change the offline port from target to initiator.

   The following example shows how you can change the port type for 0c from target to initiator: `system node hardware unified-connect modify -node sysnode1 -adapter 0c -type initiator`

4. Reboot the node hosting the adapter you changed.
5. Use the `system hardware unified-connect show` command to verify that the FC ports are configured correctly for your configuration.

   The following example shows the change in port type for 0c:

   ```
   system node hardware unified-connect show -node sysnode1
   ```

```
                        Current  Current    Pending  Pending
Node          Adapter   Mode     Type       Mode     Type       Status
------------  -------   -------  ---------  -------  ---------
-----------
sysnode1      0a        fc       target     -        -          online
sysnode1      0b        fc       target     -        -          online
sysnode1      0c        fc       initiator  -        -          offline
sysnode1      0d        fc       target     -        -          online
```

6. Use the `storage enable adapter` command to bring the offline port back online.

   The following example shows how you can make the port 0c online: `node run -node sysnode1 -command storage enable adapter -e 0c`

Rules for sharing an FC initiator port with multiple target ports

You can connect an FC initiator port on an ONTAP system to a maximum of four target ports on *separate* storage arrays. Sharing an FC initiator port with multiple targets is useful when you want to minimize the number of FC initiator ports used.

You can also connect an FC initiator port to a maximum of four target ports on the *same* storage array if the array can present different sets of logical devices to the FC initiator based on the target port being accessed.

There are limits on how many array LUNs can be visible over an FC initiator port. These limits vary according to release.

Rules when the FC initiator port is connected to multiple target ports on *separate* storage arrays

The rules for this configuration are as follows:

- All storage arrays must be from the same vendor model family.

  Storage arrays in the same family share the same performance and failover characteristics. For example, members of the same family all perform active-active failover, or they all perform active-passive failover. More than one factor might be used to determine storage array families. For example, storage arrays with different architectures would be in different families even though other characteristics might be the same.

- Connecting a single FC initiator port to multiple target ports is supported for MetroCluster configurations.
- A single FC initiator port can connect to a maximum of four target ports on multiple storage arrays.
- You must have each FC initiator-target port pair in a separate zone (1:1), even if the same FC initiator port is accessing multiple target ports.

Rules when the FC initiator port is connected to multiple targets ports on the *same* storage array

This configuration can be used only with storage arrays whose LUN masking, presentation, or host group capability allows for different LUN group presentations to the same FC initiator based on the target port being accessed.

Some storage arrays can present different sets of logical devices to an FC initiator based on the target port being accessed. These types of storage arrays allow the same FC initiator to be in multiple host groups. On storage arrays with this capability, it is possible for each FC initiator port to access multiple array target ports on the same storage array, with each target port presenting a different LUN group to the FC initiator. See your storage array documentation to determine whether your storage array allows the same FC initiator to be in multiple host groups.

The following are the rules for this configuration:

- A single FC initiator port can connect to up to four target ports on a storage array.
- Connecting a single FC initiator port to multiple target ports is supported for MetroCluster configurations.
- You must have each FC initiator-target port pair in a separate zone (1:1), even if the same FC initiator is accessing multiple target ports.

Related information

FlexArray virtualization implementation for third-party storage

FlexArray virtualization implementation for NetApp E-Series storage

Fabric-attached MetroCluster installation and configuration

Example configuration: shared FC initiator ports

One FC initiator port on an ONTAP system can be connected to up to four target ports on separate storage arrays or, for some storage arrays, to four target ports on the same storage arrays.

The best practice zoning recommendation is to have each FC initiator-target port pair in a separate zone (1:1), even if the same FC initiator is talking to multiple target ports.

Shared FC initiator port attached to multiple targets ports on *separate* storage arrays

The following illustration shows connections and zoning for sharing an FC initiator port with target ports on *different* storage arrays.

The solid lines in the following illustration show the connections from the FC initiator ports on system vs1 and the dashed lines show the connections from the FC initiator ports on system vs2.

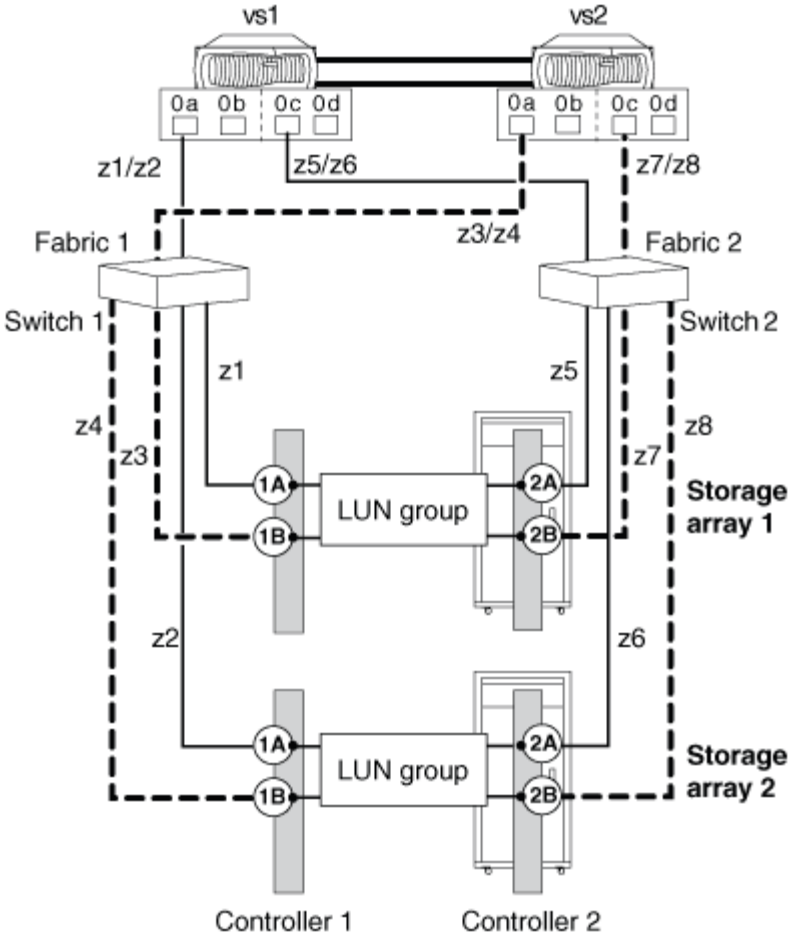

The following table shows the 1:1 zoning definitions for the example of one FC initiator port sharing multiple target ports on different storage arrays.

Zone	ONTAP system and FC initiator port	Storage array
Switch 1		
z1	vs1:0a	Storage array 1: Controller 1 Port 1A
z2	vs1:0a	Storage array 2: Controller 1 Port 1A
z3	vs2:0a	Storage array 1: Controller 1 Port 1B
z4	vs2:0a	Storage array 2: Controller 1 Port 1B
Switch 2		

Zone	ONTAP system and FC initiator port	Storage array
z5	vs1:0c	Storage array 1: Controller 2 Port 2A
z6	vs1:0c	Storage array 2: Controller 2 Port 2A
z7	vs2:0c	Storage array 1: Controller 2 Port 2B
z8	vs2:0c	Storage array 2: Controller 2 Port 2B

Shared FC initiator port attached to multiple targets ports on the *same* storage array

This configuration can be used only with storage arrays whose LUN masking, presentation, or host group capability allows for different LUN group presentations to the same FC initiator based on the target port being accessed.

Some storage arrays can present different sets of logical devices to an FC initiator based on the target port being accessed. These types of storage arrays allow the same FC initiator to be in multiple host groups. On storage arrays with this capability, it is possible for each FC initiator to access multiple array target ports on the same storage array, with each target port presenting a different LUN group to the FC initiator. Check your storage array documentation to determine whether your storage array allows the same FC initiator to be in multiple host groups.

The following illustration shows connections and zoning for sharing an FC initiator port with multiple target ports on the *same* storage array. In this example, zoning definitions are configured as 1:1, that is, one FC initiator to one target port.

The solid lines in the following illustration show the connections from the FC initiator ports on system vs1 and the dashed lines show the connections from the FC initiator ports on system vs2. Two LUN groups are required for this configuration.

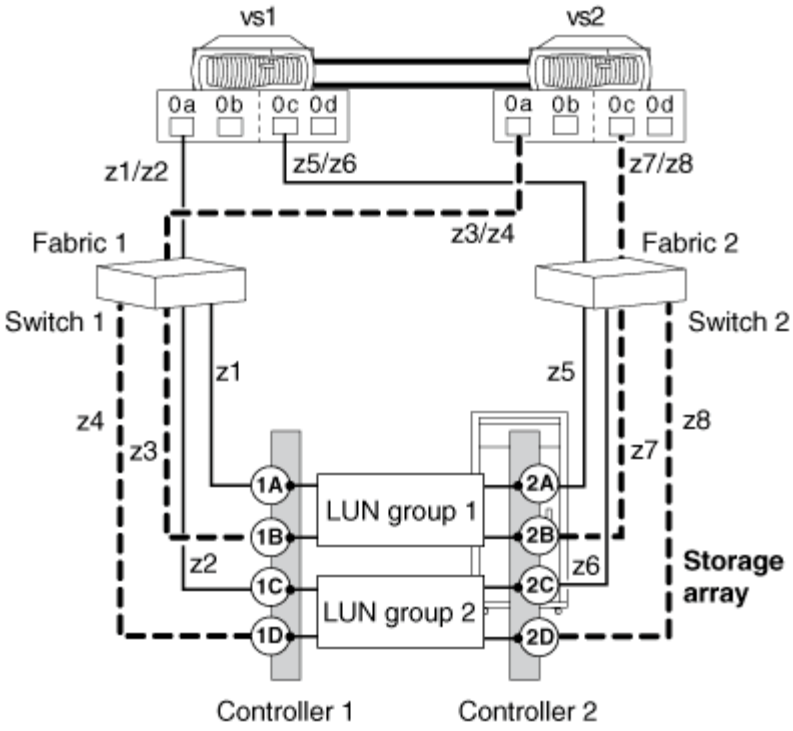

The following table shows the 1:1 zoning definitions for the example of one FC initiator port sharing multiple target ports on the same storage array.

Zone	ONTAP system and FC initiator port	Storage array and port
Switch 1		
z1	vs1:0a	Controller 1 Port 1A
z2	vs1:0a	Controller 1 Port 1C
z3	vs2:0a	Controller 1 Port 1B
z4	vs2:0a	Controller 1 Port 1D
Switch 2		
z5	vs1:0c	Controller 2 Port 2A
z6	vs1:0c	Controller 2 Port 2C
z7	vs2:0c	Controller 2 Port 2B
z8	vs2:0c	Controller 2 Port 2D

Rules for sharing a target port with multiple FC initiator ports

Connecting a maximum of two ONTAP FC initiator ports to a single target port on the storage array is supported. Each target port is zoned into two FC initiator ports, one from each cluster node. Sharing a target port connected to ONTAP systems with any other host is not supported.

Sharing a target port with multiple initiators helps in optimizing the use of storage array ports for connectivity with ONTAP systems.

The rules for this configuration are as follows:

- When the ONTAP systems are in an HA pair, each node can share at the most one FC initiator port with the same target port.
- All storage arrays must be from the same vendor and model family.
- Connecting a single target port to multiple FC initiator ports is supported for MetroCluster configurations.
- The best practice for zoning is to have each FC initiator-target port pair in a separate zone (1:1).

Related information

Fabric-attached MetroCluster installation and configuration

Example configuration: shared target ports

A maximum of two ONTAP FC initiator ports can be connected to a single target port on the storage array.

The best practice for zoning is to have each FC initiator-target port pair in a separate zone (1:1).

Shared target port attached to multiple initiator ports

The following illustration shows connections and zoning for sharing a target port with multiple FC initiator ports on different ONTAP systems.

The solid lines in the following illustration show the connections from the FC initiator ports on system vs1 and the dashed lines show the connections from the FC initiator ports on system vs2.

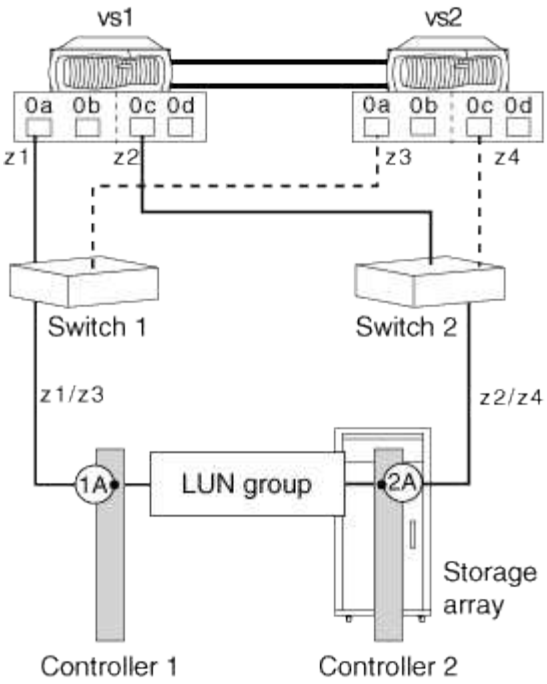

The following table shows the 1:1 zoning definitions for the example of one target port sharing two FC initiator ports from controllers in an HA pair:

Zone	ONTAP system and FC initiator port	Storage array
Switch 1		
z1	vs1:0a	Controller 1: Port 1A
z3	vs2:0a	
Switch 2		
z2	vs1:0c	Controller 2: Port 2A
z4	vs2:0c	

Checking the number of array LUNs visible on an FC initiator port

You can check the number of visible array LUNs on an FC initiator port. The supported number of array LUNs that can be visible on an FC initiator port varies for different ONTAP releases.

Steps

1. Check the visible number on the FC initiator port: `storage array config show -initiator initiator_number`

```
storage array config show -initiator 0a
```

2. If there is more than one array LUN group for a node, add the number of array LUNs for all the LUN groups for that node to determine the combined total of array LUNs visible to that node's specified FC initiator.

   The following example shows the output for FC initiator 0a for all nodes. To determine the number of array LUNs visible over a specific FC initiator for a *particular* node, you must look at the entries for that node from all the target ports shown for that node. For example, to find the number of array LUNs seen over vgv3070f51-01:0a, you would add the LUN count of 24 for LUN group 1 (HP) to the LUN count of 1 for LUN group 2 (DGC_RAID5_1), for a total of 25 array LUNs visible over vgv3070f51-01:0a.

   You would follow the same process to determine the number of array LUNs visible over vgv3070f51-02:0a for LUN group 0 and LUN group 2, which is also 25.

```
vgv3070f51::> storage array config show -initiator 0a
             LUN   LUN
Node         Group Count    Array Name     Array Target Port Initiator
------------ ----- -----    -----------  ------------------  -------
vgv3070f51-01    1    24             HP    50014380025d1508     0a
                 2     1    DGC_RAID5_1    200600a0b819e16f     0a
vgv3070f51-02    0    24             HP    50014380025d1508     0a
                 2     1    DGC_RAID5_1    200600a0b819e16f     0a
```

Requirements for connecting to storage arrays

When planning how to connect your ONTAP system to a storage array, your port-to-port connectivity plan must address redundancy, pathing, and other guidelines.

The requirements to set up connections are as follows:

- Each connection in a redundant port pair on the storage array must be attached to a different FC initiator port on the ONTAP system.
- The ports used on the FC switches must be redundant.
- Connectivity must be set up to avoid a SPOF.

  Be sure that the ports on the storage array that you select to access a given LUN are from different components, so as to avoid a single point of failure, for example, from alternate controllers, clusters, or enclosures. The reason is that you do not want all access to an array LUN to be lost if one component fails.

- The number of paths cannot exceed the number of paths supported for your ONTAP release.
- If you want to set up a configuration where an FC initiator port is shared with multiple target ports or a target port is shared with multiple FC initiator ports, you must follow the appropriate rules.
- If your storage array supports fewer LUNs per host group per port than the number of LUNs that the ONTAP systems is using, then you need to add additional cables between the ONTAP system and the storage array.

Guidelines for connecting a V-Series system to native disk shelves

When planning how to connect your V-Series system to native disk shelves, your port-to-port connectivity plan should address redundancy and other guidelines.

Number of FC initiator ports needed for disks

The number of FC initiator ports required to connect a V-Series system to a disk shelf depends on whether your V-Series system is a stand-alone system or in an HA pair

Configuration	Number of FC initiator ports
Stand-alone system	• If you are using one loop: one FC initiator port. • If you are connecting two loops: two FC initiator ports, one for each loop.
In an HA pair	• If you are using Multipath Storage, two FC initiator ports for each loop. • If you are not using Multipath Storage, one FC initiator port for each controller for each loop in the configuration.

Connections between a V-Series system and disks

You follow the same processes to cable a V-Series system to a native disk shelf as you would to cable a FAS system to a native disk shelf. When creating your port-to-port connectivity scheme, this guide and the ONTAP and hardware guides in the following table provide information about setup and management of disks and disk shelves.

For information about…	See…
Disk support, including supported disk speeds, and disk capacity	NetApp Support
Installing a V-Series system in a rack or system cabinet	On new systems, this task is typically performed by the factory. If you need instructions, see the guide for your cabinet.
Connecting a disk shelf to a stand-alone V-Series system	The Installation and Setup Instructions for your platform. • Installation and Setup Instructions 32xx Systems • Installation and Setup Instructions 62xx Systems
Connecting an HA pair to a disk shelf	High-availability configuration

For information about…	See…
Adding a disk shelf	The appropriate guide for your disk shelf type.
Moving a disk shelf	The appropriate guide for your disk shelf type.
Disk management	Disk and aggregate management

FC initiator ports required for connection to native disks

You must connect a V-Series system to native disk shelves through the FC initiator ports. The number of initiator ports required for the connection depends on whether the V-Series system is a stand-alone system or in an HA pair.

The following table lists the required number of FC initiator ports for connecting a V-Series system to native disk shelves, depending on the system configuration:

Configuration	Number of FC initiator ports
Stand-alone system	• If you are using one loop, one FC initiator port • If you are connecting two loops, two FC initiator ports: one for each loop
HA pair	• If you are using multipath storage, two FC initiator ports for each loop • If you are not using multipath storage, one FC initiator port per controller for each loop in the configuration

Example of non-optimized usage of a storage array target port

When the number of I/O requests queued on a given storage array target port exceeds the number of requests that the port can handle, it results in non-optimized usage of the target port.

You can detect such non-optimized usage of a given target port in the output display of the `storage array show` command.

Output example displaying errors on detecting non-optimized usage of a target port

The following example shows the error returned by the `storage array show` command on detecting non-optimized usage of a given target port:

```
vgv3070f50ab::> storage array show -name HP_HSV450_2

                Name: HP_HSV450_2
              Prefix:
              Vendor: HP
               Model: HSV450
             options:
       Serial Number: 50014380025d1500
 Optimization Policy: iALUA
            Affinity: AAA


Errors:
Warning: HP_HSV450_2 Detected non optimized usage of a target port. WWPN:
2703750270235, average service time: 215ms, average latency: 30ms
```

Copyright Information

Copyright © 2022 NetApp, Inc. All rights reserved. Printed in the U.S. No part of this document covered by copyright may be reproduced in any form or by any means-graphic, electronic, or mechanical, including photocopying, recording, taping, or storage in an electronic retrieval system- without prior written permission of the copyright owner.

Software derived from copyrighted NetApp material is subject to the following license and disclaimer:

THIS SOFTWARE IS PROVIDED BY NETAPP “AS IS” AND WITHOUT ANY EXPRESS OR IMPLIED WARRANTIES, INCLUDING, BUT NOT LIMITED TO, THE IMPLIED WARRANTIES OF MERCHANTABILITY AND FITNESS FOR A PARTICULAR PURPOSE, WHICH ARE HEREBY DISCLAIMED. IN NO EVENT SHALL NETAPP BE LIABLE FOR ANY DIRECT, INDIRECT, INCIDENTAL, SPECIAL, EXEMPLARY, OR CONSEQUENTIAL DAMAGES (INCLUDING, BUT NOT LIMITED TO, PROCUREMENT OF SUBSTITUTE GOODS OR SERVICES; LOSS OF USE, DATA, OR PROFITS; OR BUSINESS INTERRUPTION) HOWEVER CAUSED AND ON ANY THEORY OF LIABILITY, WHETHER IN CONTRACT, STRICT LIABILITY, OR TORT (INCLUDING NEGLIGENCE OR OTHERWISE) ARISING IN ANY WAY OUT OF THE USE OF THIS SOFTWARE, EVEN IF ADVISED OF THE POSSIBILITY OF SUCH DAMAGE.

NetApp reserves the right to change any products described herein at any time, and without notice. NetApp assumes no responsibility or liability arising from the use of products described herein, except as expressly agreed to in writing by NetApp. The use or purchase of this product does not convey a license under any patent rights, trademark rights, or any other intellectual property rights of NetApp.

The product described in this manual may be protected by one or more U.S. patents, foreign patents, or pending applications.

RESTRICTED RIGHTS LEGEND: Use, duplication, or disclosure by the government is subject to restrictions as set forth in subparagraph (c)(1)(ii) of the Rights in Technical Data and Computer Software clause at DFARS 252.277-7103 (October 1988) and FAR 52-227-19 (June 1987).

Trademark Information

NETAPP, the NETAPP logo, and the marks listed at http://www.netapp.com/TM are trademarks of NetApp, Inc. Other company and product names may be trademarks of their respective owners.