# 以擴充MetroCluster 的等位組態與陣列LUN進行連線

ONTAP MetroCluster

NetApp
May 05, 2022

This PDF was generated from https://docs.netapp.com/zh-tw/ontap-metrocluster/install-stretch/concept_stretch_mcc_configuration_with_array_luns.html on May 05, 2022. Always check docs.netapp.com for the latest.

# 目錄

以擴充MetroCluster 的等位組態與陣列LUN進行連線 . . . . . 1
以擴充MetroCluster 的等位組態與陣列LUN進行連線 . . . . . 1
以陣列LUN為MetroCluster 例的延伸功能性樣例 . . . . . 1
雙節點Stretch MetroCluster 的實體組態範例、包括磁碟和陣列LUN . . . . . 2
E系列儲存陣列的彈性MetroCluster 支援範例 . . . . . 4

# 以擴充MetroCluster 的等位組態與陣列LUN進行連線

## 以擴充MetroCluster 的等位組態與陣列LUN進行連線

在延伸MetroCluster 的部分組態中、使用陣列LUN時、您必須跨控制器連接FC-VI連接埠。控制器與E系列儲存陣列之間支援直接連線。對於所有其他LUN組態陣列、您必須在組態中使用FC交換器。

您也可以同時使用MetroCluster 磁碟和陣列LUN來設定延伸的等位配置。在此類組態中、您必須使用FC對SAS橋接器或SAS光纖纜線、將控制器連接至磁碟。

## 以陣列LUN為MetroCluster 例的延伸功能性樣例

在MetroCluster 使用陣列LUN的延伸式功能區組態中、您必須連接FC-VI連接埠、以便在控制器之間直接連線。此外、您必須將每個控制器HBA連接埠纜線連接至對應FC交換器上的交換器連接埠。除了MetroCluster E系列陣列LUN（可直接連接）之外、連接至陣列LUN的纜線與連接至光纖的功能相同。

下圖顯示以延伸MetroCluster 的概念配置、在控制器A和B之間連接的FC-VI連接埠：

FAS9000儲存系統控制器模組各使用四個FC-VI連接埠。

對於E系列陣列LUN的組態、您可以直接附加E系列LUN。

"直接附加支援MetroCluster NetApp E系列陣列的Stretch Eetch組態"

除了連接FC-VI連接埠之外、本程序的其餘步驟是使用MetroCluster 陣列LUN設定一個不使用E系列陣列LUN的靜態組態。這需要FC交換器、其使用方式與在光纖網路附加組態中使用陣列LUN相同。

"Fabric附加MetroCluster 的安裝與組態"

# 雙節點Stretch MetroCluster 的實體組態範例、包括磁碟和陣列LUN

若要使用MetroCluster 原生磁碟和陣列LUN來設定延伸式的等位配置、您必須使用FC到SAS橋接器或SAS光纖纜線、將ONTAP 非執行系統連接至磁碟櫃。此外、FC交換器也必須用於將陣列LUN連接ONTAP 至整個系統。

至少需要八個HBA連接埠、ONTAP 才能讓整個系統同時連線至原生磁碟和陣列LUN。

以下範例顯示MetroCluster 雙節點Stretch等組態搭配磁碟和陣列LUN、其中HBA連接埠0A到0d用於與陣列LUN連線。HBA連接埠1a到1d用於與原生磁碟連線。

下圖顯示雙節點的Stretch MetroCluster Setch組態、使用ONTAP SAS光纖纜線將原生磁碟連接至作業系統：

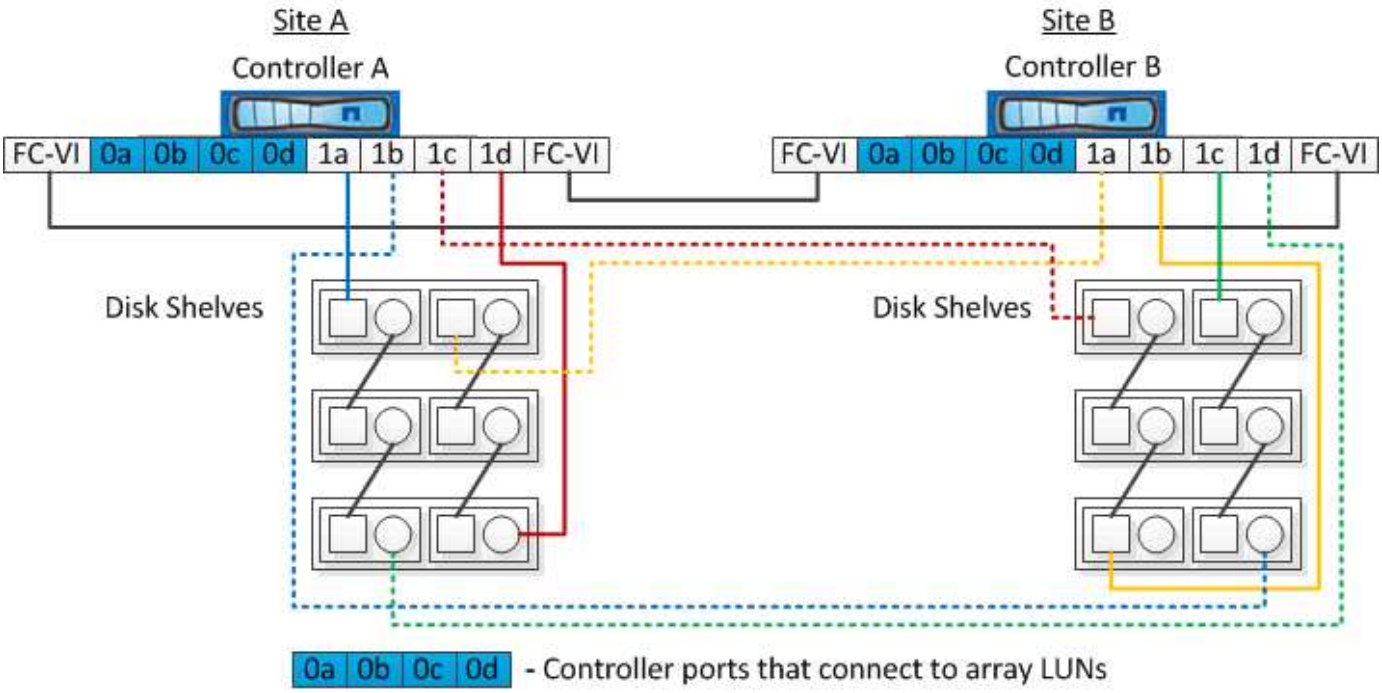


下圖顯示雙節點的Stretch MetroCluster Setch組態、其中原生磁碟是ONTAP 使用FC到SAS橋接器連接到該系統：

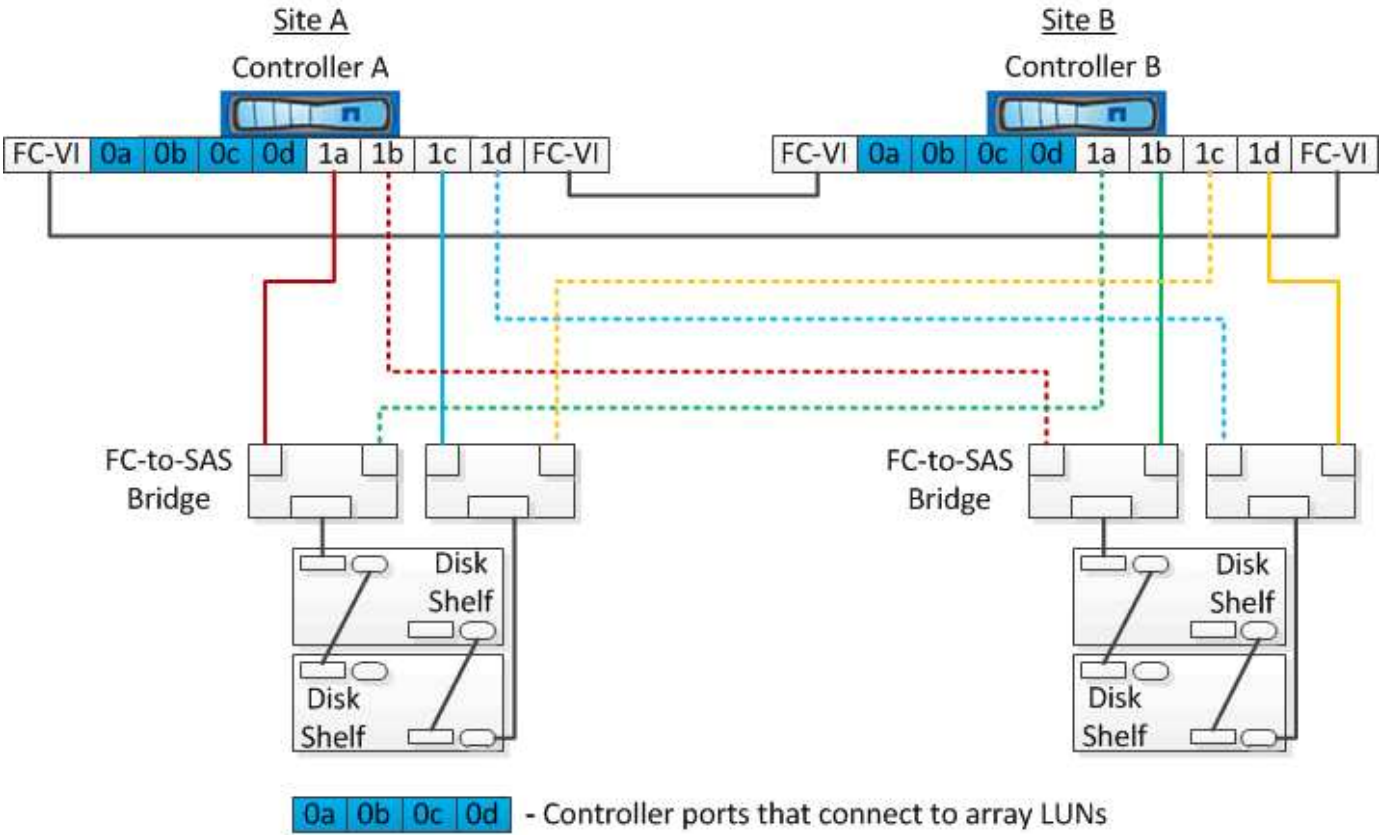


下圖顯示MetroCluster 雙節點Stretch功能組態搭配陣列LUN連線：

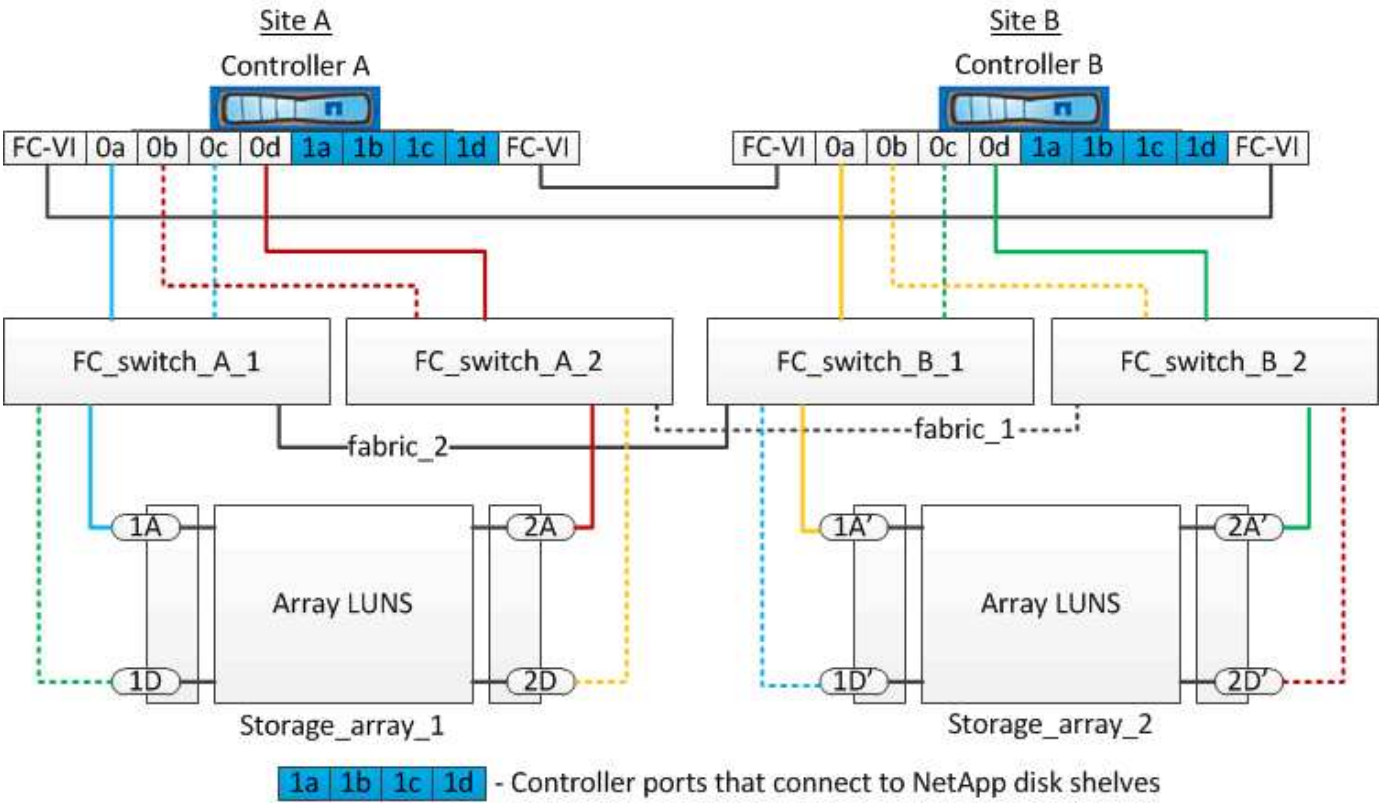


> 如有需要、您也可以使用相同的FC交換器、將原生磁碟和陣列LUN連接MetroCluster 至採用此功能組態的控制器。

"Fabric附加MetroCluster 的安裝與組態"

# E系列儲存陣列的彈性MetroCluster 支援範例

在E系列儲存陣列LUN的延伸MetroCluster 功能支援中、您可以直接連接儲存控制器和儲存陣列。與其他陣列LUN不同、不需要FC交換器。

。 "直接附加支援MetroCluster NetApp E系列陣列的Stretch Eetch組態" 知識庫文章提供E系列陣列LUN的組態範例。

**Copyright Information**

Copyright © 2022 NetApp, Inc. All rights reserved. Printed in the U.S. No part of this document covered by copyright may be reproduced in any form or by any means-graphic, electronic, or mechanical, including photocopying, recording, taping, or storage in an electronic retrieval system- without prior written permission of the copyright owner.

Software derived from copyrighted NetApp material is subject to the following license and disclaimer:

THIS SOFTWARE IS PROVIDED BY NETAPP “AS IS” AND WITHOUT ANY EXPRESS OR IMPLIED WARRANTIES, INCLUDING, BUT NOT LIMITED TO, THE IMPLIED WARRANTIES OF MERCHANTABILITY AND FITNESS FOR A PARTICULAR PURPOSE, WHICH ARE HEREBY DISCLAIMED. IN NO EVENT SHALL NETAPP BE LIABLE FOR ANY DIRECT, INDIRECT, INCIDENTAL, SPECIAL, EXEMPLARY, OR CONSEQUENTIAL DAMAGES (INCLUDING, BUT NOT LIMITED TO, PROCUREMENT OF SUBSTITUTE GOODS OR SERVICES; LOSS OF USE, DATA, OR PROFITS; OR BUSINESS INTERRUPTION) HOWEVER CAUSED AND ON ANY THEORY OF LIABILITY, WHETHER IN CONTRACT, STRICT LIABILITY, OR TORT (INCLUDING NEGLIGENCE OR OTHERWISE) ARISING IN ANY WAY OUT OF THE USE OF THIS SOFTWARE, EVEN IF ADVISED OF THE POSSIBILITY OF SUCH DAMAGE.

NetApp reserves the right to change any products described herein at any time, and without notice. NetApp assumes no responsibility or liability arising from the use of products described herein, except as expressly agreed to in writing by NetApp. The use or purchase of this product does not convey a license under any patent rights, trademark rights, or any other intellectual property rights of NetApp.

The product described in this manual may be protected by one or more U.S. patents, foreign patents, or pending applications.

RESTRICTED RIGHTS LEGEND: Use, duplication, or disclosure by the government is subject to restrictions as set forth in subparagraph (c)(1)(ii) of the Rights in Technical Data and Computer Software clause at DFARS 252.277-7103 (October 1988) and FAR 52-227-19 (June 1987).

**Trademark Information**

NETAPP, the NETAPP logo, and the marks listed at http://www.netapp.com/TM are trademarks of NetApp, Inc. Other company and product names may be trademarks of their respective owners.