如何使用第3層廣域網路

ONTAP MetroCluster

NetApp
May 03, 2022

This PDF was generated from https://docs.netapp.com/zh-tw/ontap-metrocluster/install-ip/task_modify_ip_netmask_gateway_properties.html on May 03, 2022. Always check docs.netapp.com for the latest.

目錄

第3層廣域網路的考量 1
IP路由網路需求 2
修改MetroCluster 位址、網路遮罩和閘道、使其位於一個靜態IP中 2

第3層廣域網路的考量

從功能支援的9.9開始ONTAP 、MetroCluster 即可透過IP路由（第3層）後端連線來實作支援的IP組態。

後端交換器可直接連線至路由IP網路、或直接連線至路由器（如下列簡化範例所示）、或透過其他介入式交換器連線。MetroCluster

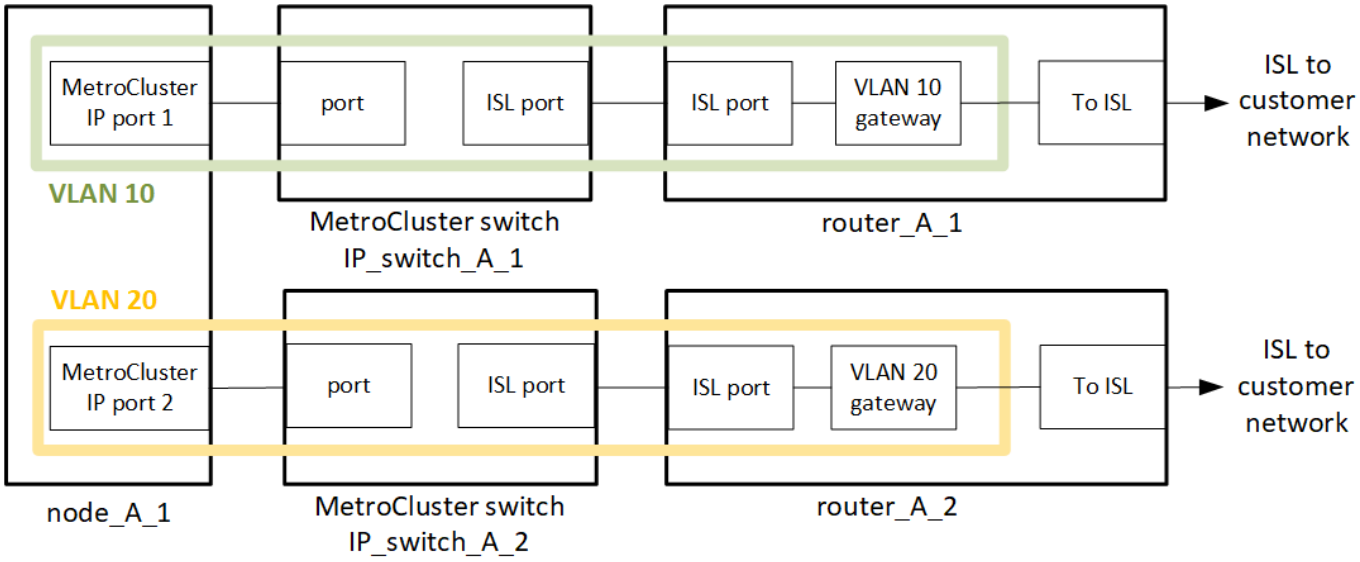

NetApp僅支援NetApp驗證的交換器。這些交換器均由NetApp測試與銷售。它們會列在中 "NetApp互通性對照表工具IMT （不含）" 和 "IP交換器佈線"。

如所述、將此環境設定為標準的靜態IP組態、並以纜線連接MetroCluster MetroCluster "設定MetroCluster 靜態硬體元件"。執行安裝和佈線程序時、您必須執行第3層組態的特定步驟：

- 這個交換器可直接連接到路由器或一或多個介入交換器。MetroClusterVLAN必須延伸至閘道裝置。
- 您可以使用「-gateway]參數、以MetroCluster IP閘道位址來設定靜態IP（MCC-IP）介面位址。

設定路由器和閘道IP位址時、請確保符合下列需求：

- 在每個節點上、兩個介面不能具有相同的閘道IP位址。
- 每個站台上HA配對上的對應介面必須具有相同的閘道IP位址。
- 節點及其DR和輔助合作夥伴上的對應介面不能具有相同的閘道IP位址。
- 節點及其DR和輔助合作夥伴上的對應介面必須具有相同的VLAN ID。

這個功能VLAN必須從邊緣的交換器延伸到閘道路由器、才能使路由器的資訊流量到達閘道（請參閱上圖）MetroCluster MetroCluster MetroCluster 。每個站台的「不支援VLAN」VLAN ID MetroCluster 必須相同。不過、子網路可能會有所不同。

您可以使用RcfFileGenerator.工具所建立的RCF檔案。在RCF節點與MetroCluster 閘道路由器之間的網路必須提供與RCF檔案中設定相同的VLAN ID。

IP路由網路需求

IP路由網路必須符合下列需求：

- "基本功能ISL需求MetroCluster"
- "共享第2層網路的ISL需求"
- "中繼交換器上的必要設定"
- 不支援MetroCluster 動態路由傳送給不支援的資訊流量。
- 僅MetroCluster 支援四節點的不支援組態（每個站台有兩個節點）。
- 每MetroCluster 個站台都需要兩個子網路、每個網路都需要一個子網路。
- 不支援自動IP指派。

修改MetroCluster 位址、網路遮罩和閘道、使其位於一個靜態IP中

從ONTAP 《E59.10.1》開始、您可以變更MetroCluster 下列的EIP介面屬性：IP位址和遮罩、以及閘道。您可以使用任何參數組合來更新。

例如、如果偵測到重複的IP位址、或是因為路由器組態變更而需要變更第3層網路的閘道、您可能需要更新這些內容。

一次只能變更一個介面。在更新其他介面並重新建立連線之前、該介面會造成流量中斷。

使用「MetroCluster 靜態組態設定介面modify」命令來變更MetroCluster 任何的任何靜態IP介面屬性。

> 這些命令會變更特定連接埠之特定節點的組態。若要還原完整的網路連線能力、其他連接埠也需要類似的命令。同樣地、網路交換器也需要更新其組態。例如、如果閘道已更新、則理想情況下會在HA配對的兩個節點上變更閘道、因為它們相同。此外、連接至這些節點的交換器也需要更新其閘道。

使用「MetroCluster 畫面組態設定介面show」、「MetroCluster 畫面連線」檢查和「MetroCluster 畫面顯示」命令、確認所有連線功能都能在所有介面上運作。

修改IP位址、網路遮罩和閘道

1. 更新單一節點和介面的IP位址、網路遮罩和閘道：MetroCluster 「修改組態設定介面」

下列命令顯示如何更新IP位址、網路遮罩和閘道：

```
cluster_A::* metrocluster configuration-settings interface modify -cluster
-name cluster_A -home-node node_A_1 -home-port e0a-10 -address
192.168.12.101 -gateway 192.168.12.1 -netmask 255.255.254.0
(metrocluster configuration-settings interface modify)

Warning: This operation will disconnect and reconnect iSCSI and RDMA
connections used for DR protection through port “e0a-10”. Partner nodes
may need modifications for port “e0a-10” in order to completely establish
network connectivity.
Do you want to continue?" yes

[Job 28] Setting up iSCSI target configuration. (pass2:iscsi13:0:-1:0):
xpt_action_default: CCB type 0xe XPT_DEV_ADVINFO not supported
[Job 28] Establishing iSCSI initiator connections.
(pass6:iscsi14:0:-1:0): xpt_action_default: CCB type 0xe XPT_DEV_ADVINFO
not supported
(pass8:iscsi15:0:-1:0): xpt_action_default: CCB type 0xe XPT_DEV_ADVINFO
not supported
(pass9:iscsi16:0:-1:0): xpt_action_default: CCB type 0xe XPT_DEV_ADVINFO
not supported
[Job 28] Job succeeded: Interface Modify is successful.

cluster_A::*> metrocluster configuration-settings interface modify
-cluster-name cluster_A -home-node node_A_2 -home-port e0a-10 -address
192.168.12.201 -gateway 192.168.12.1 -netmask 255.255.254.0
(metrocluster configuration-settings interface modify)
Warning: This operation will disconnect and reconnect iSCSI and RDMA
connections used for DR protection through port “e0a-10”. Partner nodes
may need modifications for port “e0a-10” in order to completely establish
network connectivity.
Do you want to continue?" yes
[Job 28] Job succeeded: Interface Modify is successful
```

1. 確認所有連線功能都適用於所有介面：MetroCluster 「介紹組態設定介面」

下列命令說明如何驗證所有連線功能是否適用於所有介面：

```
cluster_A::*> metrocluster configuration-settings interface show
(metrocluster configuration-settings interface show)
DR              Config
Group Cluster Node    Network Address Netmask         Gateway
State
----- ------- ------- --------------- --------------- ---------------
---------
1     cluster_A node_A_2
                 Home Port: e0a-10
                      192.168.12.201  255.255.254.0   192.168.12.1
completed
                 Home Port: e0b-20
                      192.168.20.200  255.255.255.0   192.168.20.1
completed
                node_A_1
                 Home Port: e0a-10
                      192.168.12.101  255.255.254.0   192.168.12.1
completed
                 Home Port: e0b-20
                      192.168.20.101  255.255.255.0   192.168.20.1
completed
      cluster_B node_B_1
                 Home Port: e0a-10
                      192.168.11.151  255.255.255.0   192.168.11.1
completed
                 Home Port: e0b-20
                      192.168.21.150  255.255.255.0   192.168.21.1
completed
                node_B_2
                 Home Port: e0a-10
                      192.168.11.250  255.255.255.0   192.168.11.1
completed
                 Home Port: e0b-20
                      192.168.21.250  255.255.255.0   192.168.21.1
completed
8 entries were displayed.
```

1. [[step3]確認所有連線都正常運作：MetroCluster 「顯示組態設定連線」

下列命令顯示如何驗證所有連線是否正常運作：

```
cluster_A::*> metrocluster configuration-settings connection show
  (metrocluster configuration-settings connection show)
DR                    Source          Destination
Group Cluster Node    Network Address Network Address Partner Type Config
State
----- ------- ------- --------------- --------------- ------------
------------
1     cluster_A node_A_2
                 Home Port: e0a-10
                      192.168.10.200  192.168.10.101  HA Partner
completed
                 Home Port: e0a-10
                      192.168.10.200  192.168.11.250  DR Partner
completed
                 Home Port: e0a-10
                      192.168.10.200  192.168.11.151  DR Auxiliary
completed
                 Home Port: e0b-20
                      192.168.20.200  192.168.20.100  HA Partner
completed
                 Home Port: e0b-20
                      192.168.20.200  192.168.21.250  DR Partner
completed
                 Home Port: e0b-20
                      192.168.20.200  192.168.21.150  DR Auxiliary
completed
                node_A_1
                 Home Port: e0a-10
                      192.168.10.101  192.168.10.200  HA Partner
completed
                 Home Port: e0a-10
                      192.168.10.101  192.168.11.151  DR Partner
completed
                 Home Port: e0a-10
                      192.168.10.101  192.168.11.250  DR Auxiliary
completed
                 Home Port: e0b-20
                      192.168.20.100  192.168.20.200  HA Partner
completed
                 Home Port: e0b-20
                      192.168.20.100  192.168.21.150  DR Partner
completed
                 Home Port: e0b-20
                      192.168.20.100  192.168.21.250  DR Auxiliary
completed
```

Copyright Information

Copyright © 2022 NetApp, Inc. All rights reserved. Printed in the U.S. No part of this document covered by copyright may be reproduced in any form or by any means-graphic, electronic, or mechanical, including photocopying, recording, taping, or storage in an electronic retrieval system- without prior written permission of the copyright owner.

Software derived from copyrighted NetApp material is subject to the following license and disclaimer:

THIS SOFTWARE IS PROVIDED BY NETAPP “AS IS” AND WITHOUT ANY EXPRESS OR IMPLIED WARRANTIES, INCLUDING, BUT NOT LIMITED TO, THE IMPLIED WARRANTIES OF MERCHANTABILITY AND FITNESS FOR A PARTICULAR PURPOSE, WHICH ARE HEREBY DISCLAIMED. IN NO EVENT SHALL NETAPP BE LIABLE FOR ANY DIRECT, INDIRECT, INCIDENTAL, SPECIAL, EXEMPLARY, OR CONSEQUENTIAL DAMAGES (INCLUDING, BUT NOT LIMITED TO, PROCUREMENT OF SUBSTITUTE GOODS OR SERVICES; LOSS OF USE, DATA, OR PROFITS; OR BUSINESS INTERRUPTION) HOWEVER CAUSED AND ON ANY THEORY OF LIABILITY, WHETHER IN CONTRACT, STRICT LIABILITY, OR TORT (INCLUDING NEGLIGENCE OR OTHERWISE) ARISING IN ANY WAY OUT OF THE USE OF THIS SOFTWARE, EVEN IF ADVISED OF THE POSSIBILITY OF SUCH DAMAGE.

NetApp reserves the right to change any products described herein at any time, and without notice. NetApp assumes no responsibility or liability arising from the use of products described herein, except as expressly agreed to in writing by NetApp. The use or purchase of this product does not convey a license under any patent rights, trademark rights, or any other intellectual property rights of NetApp.

The product described in this manual may be protected by one or more U.S. patents, foreign patents, or pending applications.

RESTRICTED RIGHTS LEGEND: Use, duplication, or disclosure by the government is subject to restrictions as set forth in subparagraph (c)(1)(ii) of the Rights in Technical Data and Computer Software clause at DFARS 252.277-7103 (October 1988) and FAR 52-227-19 (June 1987).

Trademark Information

NETAPP, the NETAPP logo, and the marks listed at http://www.netapp.com/TM are trademarks of NetApp, Inc. Other company and product names may be trademarks of their respective owners.