Cable a two-node bridge-attached stretch MetroCluster configuration

ONTAP MetroCluster

NetApp
March 22, 2024

This PDF was generated from https://docs.netapp.com/us-en/ontap-metrocluster/install-stretch/task_configure_the_mcc_hardware_components_2_node_stretch_atto.html on March 22, 2024.
Always check docs.netapp.com for the latest.

Table of Contents

Cable a two-node bridge-attached stretch MetroCluster configuration . . . 1
Cabling a two-node bridge-attached stretch MetroCluster configuration . . . 1
Parts of a two-node bridge-attached stretch MetroCluster configuration . . . 1
Required MetroCluster hardware components and naming conventions for two-node bridge-attached stretch configurations . . . 2
Information gathering worksheet for FC-to-SAS bridges . . . 4
Install and cable MetroCluster components . . . 6
Installing FC-to-SAS bridges and SAS disk shelves . . . 8

Cable a two-node bridge-attached stretch MetroCluster configuration

Cabling a two-node bridge-attached stretch MetroCluster configuration

The MetroCluster components must be physically installed, cabled, and configured at both geographic sites. The steps are slightly different for a system with native disk shelves as opposed to a system with array LUNs.

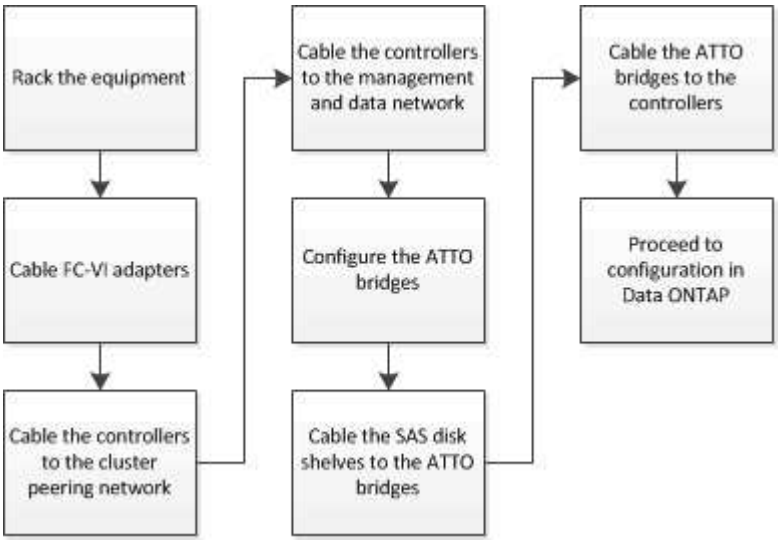

Parts of a two-node bridge-attached stretch MetroCluster configuration

As you plan your MetroCluster configuration, you should understand the parts of the configuration and how they work together.

The MetroCluster configuration includes the following key hardware elements:

- Storage controllers

  The storage controllers are not connected directly to the storage but connected to FC-to-SAS bridges. The storage controllers are connected to each other by FC cables between each controller's FC-VI adapters.

  Each storage controller is configured as a DR partner to a storage controller on the partner site.

- FC-to-SAS bridges

  The FC-to-SAS bridges connect the SAS storage stacks to the FC initiator ports on the controllers, providing bridging between the two protocols.

- Cluster peering network

  The cluster peering network provides connectivity for mirroring of the storage virtual machine (SVM)

configuration. The configuration of all SVMs on one cluster is mirrored to the partner cluster.

The following illustration shows a simplified view of the MetroCluster configuration. For some connections, a single line represents multiple, redundant connections between the components. Data and management network connections are not shown.

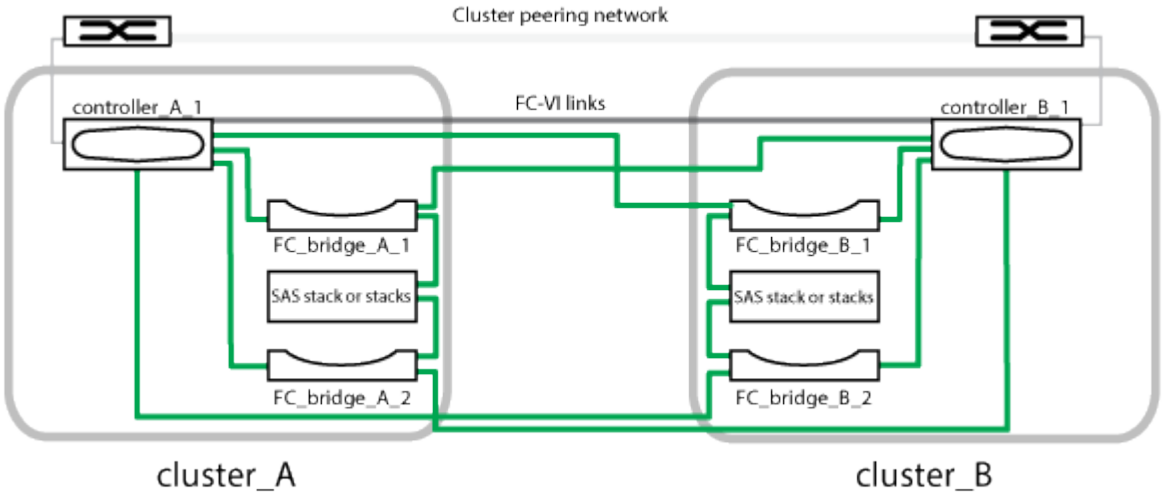

- The configuration consists of two single-node clusters.
- Each site has one or more stacks of SAS storage.

> SAS shelves in MetroCluster configurations are not supported with ACP cabling.

Additional storage stacks are supported, but only one is shown at each site.

Required MetroCluster hardware components and naming conventions for two-node bridge-attached stretch configurations

When planning your MetroCluster configuration, you must understand the required and supported hardware and software components. For convenience and clarity, you should also understand the naming conventions used for components in examples throughout the documentation. For example, one site is referred to as Site A and the other site is referred to as Site B.

Supported software and hardware

The hardware and software must be supported for the MetroCluster FC configuration.

NetApp Hardware Universe

When using AFF systems, all controller modules in the MetroCluster configuration must be configured as AFF systems.

Hardware redundancy in the MetroCluster configuration

Because of the hardware redundancy in the MetroCluster configuration, there are two of each component at each site. The sites are arbitrarily assigned the letters A and B and the individual components are arbitrarily assigned the numbers 1 and 2.

Requirement for two single-node ONTAP clusters

The bridge-attached stretch MetroCluster configuration requires two single-node ONTAP clusters.

Naming must be unique within the MetroCluster configuration.

Example names:

- Site A: cluster_A
- Site B: cluster_B

Requirement for two storage controller modules

The bridge-attached stretch MetroCluster configuration requires two storage controller modules.

The controllers must meet the following requirements:

- Naming must be unique within the MetroCluster configuration.
- All controller modules in the MetroCluster configuration must be running the same version of ONTAP.
- All controller modules in a DR group must be of the same model.
- All controller modules in a DR group must use the same FC-VI configuration.

  Some controller modules support two options for FC-VI connectivity:

  - Onboard FC-VI ports
  - An FC-VI card in slot 1

    A mix of one controller module using onboard FC-VI ports and another using an add-on FC-VI card is not supported. For example, if one node uses onboard FC-VI configuration, then all other nodes in the DR group must use onboard FC-VI configuration as well.

Example names:

- Site A: controller_A_1
- Site B: controller_B_1

Requirement for FC-to-SAS bridges

The bridge-attached stretch MetroCluster configuration requires two or more FC-to-SAS bridges at each site.

These bridges connect the SAS disk shelves to the controller modules.

> FibreBridge 6500N bridges are not supported in configurations running ONTAP 9.8 and later.

- FibreBridge 7600N and 7500N bridges support up to four SAS stacks.

- FibreBridge 6500N bridges support only one SAS stack.
- Each stack can use different models of IOM, but all shelves within a stack must use the same model.

  The supported IOM models depend on the ONTAP version you are running.

- Naming must be unique within the MetroCluster configuration.

The suggested names used as examples in this procedure identify the controller module that the bridge connects to and the port.

Example names:

- Site A:
  - bridge_A_1_*port-number*
  - bridge_A_2_*port-number*
- Site B:
  - bridge_B_1_*port-number*
  - bridge_B_2_*port-number*

Requirement for at least four SAS shelves (recommended)

The bridge-attached stretch MetroCluster configuration requires at least two SAS shelves. However, two shelves are recommended at each site to allow disk ownership on a per-shelf basis, for a total of four SAS shelves.

A minimum of one shelf at each site is supported.

Example names:

- Site A:
  - shelf_A_1_1
  - shelf_A_1_2
- Site B:
  - shelf_B_1_1
  - shelf_B_1_2

Mixing IOM12 and IOM 6 modules in a stack

Your version of ONTAP must support shelf mixing. Refer to the Interoperability Matrix Tool (IMT) to see if your version of ONTAP supports shelf mixing. NetApp Interoperability

For further details on shelf mixing, see: Hot-adding shelves with IOM12 modules to a stack of shelves with IOM6 modules

Information gathering worksheet for FC-to-SAS bridges

Before beginning to configure the MetroCluster sites, you should gather required configuration information.

Site A, FC-to-SAS bridge 1 (FC_bridge_A_1a)

Each SAS stack requires at least two FC-to-SAS bridges.

Each bridge connects to Controller_A_1_*port-number* and Controller_B_1_*port-number*.

Site A	Your value
Bridge_A_1a IP address	
Bridge_A_1a Username	
Bridge_A_1a Password	

Site A, FC-to-SAS bridge 2 (FC_bridge_A_1b)

Each SAS stack requires at least two FC-to-SAS bridges.

Each bridge connects to Controller_A_1_*port-number* and Controller_B_1_*port-number*.

Site A	Your value
Bridge_A_1b IP address	
Bridge_A_1b Username	
Bridge_A_1b Password	

Site B, FC-to-SAS bridge 1 (FC_bridge_B_1a)

Each SAS stack requires at least two FC-to-SAS bridges.

Each bridge connects to Controller_A_1_`*port-number*` and Controller_B_1_`*port-number*`.

Site B	Your value
Bridge_B_1a IP address	
Bridge_B_1a Username	
Bridge_B_1a Password	

Site B, FC-to-SAS bridge 2 (FC_bridge_B_1b)

Each SAS stack requires at least two FC-to-SAS bridges.

Each bridge connects to Controller_A_1_`*port-number*` and Controller_B_1_`*port-number*`.

Site B	Your value
Bridge_B_1b IP address	
Bridge_B_1b Username	
Bridge_B_1b Password	

Install and cable MetroCluster components

Racking the hardware components

If you have not received the equipment already installed in cabinets, you must rack the components.

This task must be performed on both MetroCluster sites.

Steps

1. Plan out the positioning of the MetroCluster components.

   The rack space depends on the platform model of the storage controllers, switch types, and the number of disk shelf stacks in your configuration.

2. Properly ground yourself.
3. Install the storage controllers in the rack or cabinet.

   ONTAP Hardware Systems Documentation

4. Install the disk shelves, power them on, and set the shelf IDs.
   - You must power-cycle each disk shelf.
   - Shelf IDs must be unique for each SAS disk shelf within each MetroCluster DR group (including both sites).
5. Install each FC-to-SAS bridge:
   a. Secure the “L” brackets on the front of the bridge to the front of the rack (flush-mount) with the four screws.

      The openings in the bridge “L” brackets are compliant with rack standard ETA-310-X for 19-inch (482.6 mm) racks.

      For more information and an illustration of the installation, see the *ATTO FibreBridge Installation and Operation Manual for your bridge model*.

   b. Connect each bridge to a power source that provides a proper ground.
   c. Power on each bridge.

      For maximum resiliency, bridges that are attached to the same stack of disk shelves must be connected to different power sources.

The bridge Ready LED might take up to 30 seconds to illuminate, indicating that the bridge has completed its power-on self test sequence.

Cabling the controllers to each other

Each controller's FC-VI adapters must be cabled directly to its partner.

Steps

1. Cable the FC-VI ports.

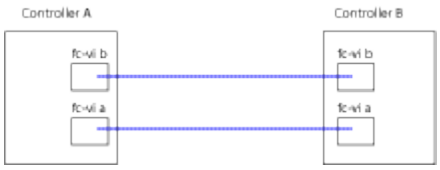

The above illustration is a typical representation of the required cabling. The specific FC-VI ports vary by controller module.

- AFF A300 and FAS8200 controller modules can be ordered with one of two options for FC-VI connectivity:
  - Onboard ports 0e and 0f configured in FC-VI mode.
  - Ports 1a and 1b on an FC-VI card in slot 1.
- AFF A700 and FAS9000 storage systems controller modules use four FC-VI ports each.

Cabling the cluster peering connections

You must cable the controller module ports used for cluster peering so that they have connectivity with the cluster on their partner site.

This task must be performed on each controller module in the MetroCluster configuration.

At least two ports on each controller module should be used for cluster peering.

The recommended minimum bandwidth for the ports and network connectivity is 1 GbE.

Steps

1. Identify and cable at least two ports for cluster peering and verify they have network connectivity with the partner cluster.

   Cluster peering can be done on dedicated ports or on data ports. Using dedicated ports provides a higher throughput for the cluster peering traffic.

   Cluster and SVM peering express configuration

Cabling the management and data connections

You must cable the management and data ports on each storage controller to the site networks.

This task must be repeated for each new controller at both MetroCluster sites.

You can connect the controller and cluster switch management ports to existing switches in your network. In addition you can connect controller to new dedicated network switches such as NetApp CN1601 cluster management switches.

Steps

1. Cable the controller's management and data ports to the management and data networks at the local site.

   ONTAP Hardware Systems Documentation

Installing FC-to-SAS bridges and SAS disk shelves

You install and cable ATTO FibreBridge bridges and SAS disk shelves when adding new storage to the configuration.

For systems received from the factory, the FC-to-SAS bridges are preconfigured and do not require additional configuration.

This procedure assumes that you are using the recommended bridge management interfaces: the ATTO ExpressNAV GUI and ATTO QuickNAV utility.

Use the ATTO ExpressNAV GUI to configure and manage a bridge, and to update the bridge firmware. You use the ATTO QuickNAV utility to configure the bridge Ethernet management 1 port.

You can use other management interfaces instead, if needed, such as a serial port or Telnet to configure and manage a bridge and to configure the Ethernet management 1 port, and FTP to update the bridge firmware.

This procedure uses the following workflow:

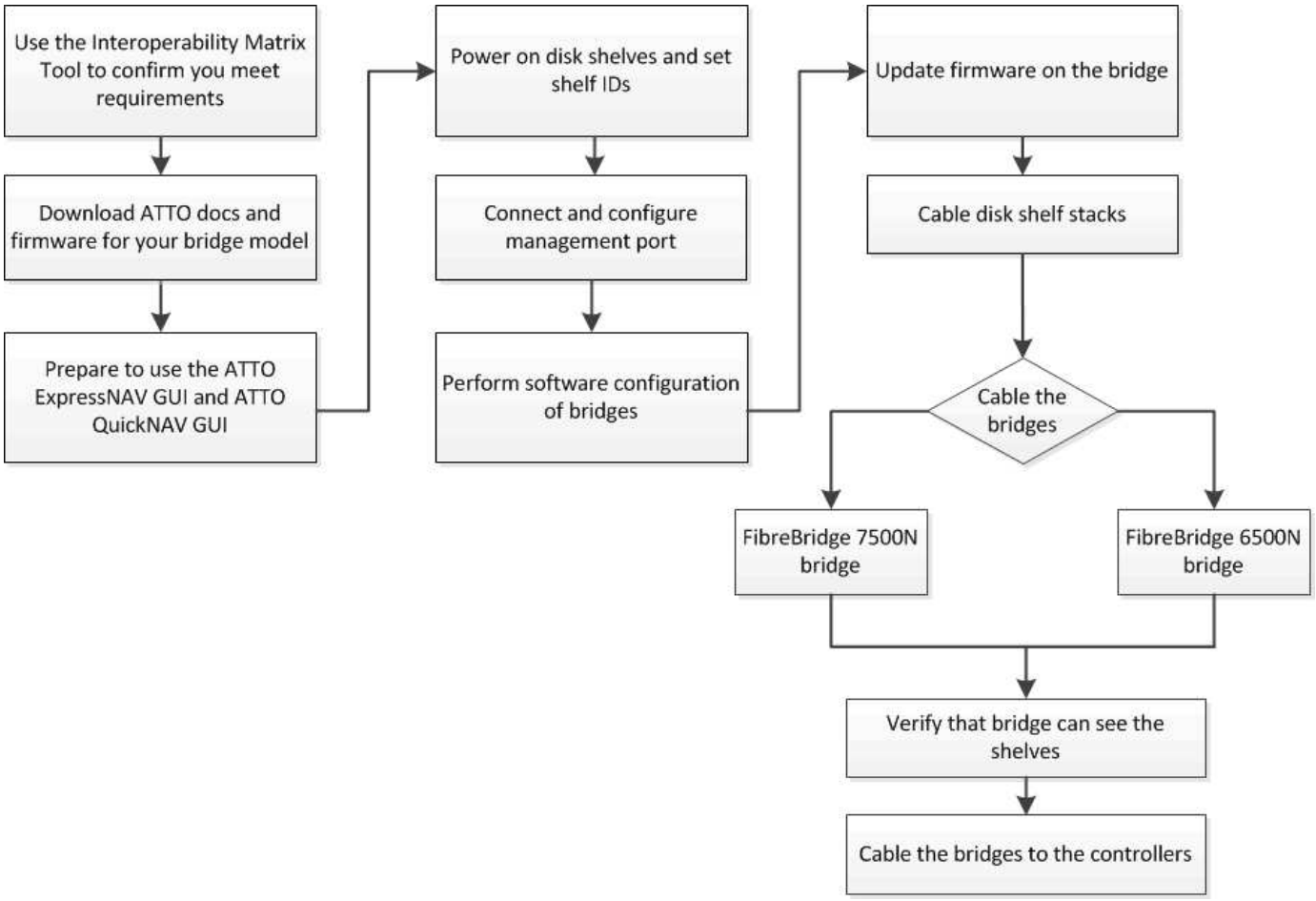
Use the Interoperability Matrix Tool to confirm you meet requirements
Download ATTO docs and firmware for your bridge model
Prepare to use the ATTO ExpressNAV GUI and ATTO QuickNAV GUI
Power on disk shelves and set shelf IDs
Connect and configure management port
Perform software configuration of bridges
Update firmware on the bridge
Cable disk shelf stacks
Cable the bridges
FibreBridge 7500N bridge
FibreBridge 6500N bridge
Verify that bridge can see the shelves
Cable the bridges to the controllers

Copyright information

Copyright © 2024 NetApp, Inc. All Rights Reserved. Printed in the U.S. No part of this document covered by copyright may be reproduced in any form or by any means—graphic, electronic, or mechanical, including photocopying, recording, taping, or storage in an electronic retrieval system—without prior written permission of the copyright owner.

Software derived from copyrighted NetApp material is subject to the following license and disclaimer:

THIS SOFTWARE IS PROVIDED BY NETAPP “AS IS” AND WITHOUT ANY EXPRESS OR IMPLIED WARRANTIES, INCLUDING, BUT NOT LIMITED TO, THE IMPLIED WARRANTIES OF MERCHANTABILITY AND FITNESS FOR A PARTICULAR PURPOSE, WHICH ARE HEREBY DISCLAIMED. IN NO EVENT SHALL NETAPP BE LIABLE FOR ANY DIRECT, INDIRECT, INCIDENTAL, SPECIAL, EXEMPLARY, OR CONSEQUENTIAL DAMAGES (INCLUDING, BUT NOT LIMITED TO, PROCUREMENT OF SUBSTITUTE GOODS OR SERVICES; LOSS OF USE, DATA, OR PROFITS; OR BUSINESS INTERRUPTION) HOWEVER CAUSED AND ON ANY THEORY OF LIABILITY, WHETHER IN CONTRACT, STRICT LIABILITY, OR TORT (INCLUDING NEGLIGENCE OR OTHERWISE) ARISING IN ANY WAY OUT OF THE USE OF THIS SOFTWARE, EVEN IF ADVISED OF THE POSSIBILITY OF SUCH DAMAGE.

NetApp reserves the right to change any products described herein at any time, and without notice. NetApp assumes no responsibility or liability arising from the use of products described herein, except as expressly agreed to in writing by NetApp. The use or purchase of this product does not convey a license under any patent rights, trademark rights, or any other intellectual property rights of NetApp.

The product described in this manual may be protected by one or more U.S. patents, foreign patents, or pending applications.

LIMITED RIGHTS LEGEND: Use, duplication, or disclosure by the government is subject to restrictions as set forth in subparagraph (b)(3) of the Rights in Technical Data -Noncommercial Items at DFARS 252.227-7013 (FEB 2014) and FAR 52.227-19 (DEC 2007).

Data contained herein pertains to a commercial product and/or commercial service (as defined in FAR 2.101) and is proprietary to NetApp, Inc. All NetApp technical data and computer software provided under this Agreement is commercial in nature and developed solely at private expense. The U.S. Government has a non-exclusive, non-transferrable, nonsublicensable, worldwide, limited irrevocable license to use the Data only in connection with and in support of the U.S. Government contract under which the Data was delivered. Except as provided herein, the Data may not be used, disclosed, reproduced, modified, performed, or displayed without the prior written approval of NetApp, Inc. United States Government license rights for the Department of Defense are limited to those rights identified in DFARS clause 252.227-7015(b) (FEB 2014).

Trademark information

NETAPP, the NETAPP logo, and the marks listed at http://www.netapp.com/TM are trademarks of NetApp, Inc. Other company and product names may be trademarks of their respective owners.