Cable storage arrays to FC switches in a MetroCluster configuration

ONTAP MetroCluster

NetApp
March 22, 2024

This PDF was generated from https://docs.netapp.com/us-en/ontap-metrocluster/install-fc/task_cable_storage_arrays_to_fc_switches_in_a_mcc_configuration.html on March 22, 2024. Always check docs.netapp.com for the latest.

Table of Contents

Cable storage arrays to FC switches in a MetroCluster configuration 1
Cabling storage arrays to FC switches in a MetroCluster configuration 1
Example of cabling storage array ports to FC switches in a two-node MetroCluster configuration 1
Example of cabling storage array ports to FC switches in a four-node MetroCluster configuration 3
Example of cabling storage array ports to FC switches in an eight-node MetroCluster configuration 5

Cable storage arrays to FC switches in a MetroCluster configuration

Cabling storage arrays to FC switches in a MetroCluster configuration

You must connect storage arrays to FC switches so that the ONTAP systems in the MetroCluster configuration can access a specific array LUN through at least two paths.

Before you begin

- The storage arrays must be set up to present array LUNs to ONTAP.
- The ONTAP controllers must be connected to the FC switches.
- The ISLs must be cabled between the FC switches across the MetroCluster sites.
- You must repeat this task for each storage array at both of the MetroCluster sites.
- You must connect the controllers in a MetroCluster configuration to the storage arrays through FC switches.

Steps

1. Connect the storage array ports to FC switch ports.

   At each site, connect the redundant port pairs in the storage array to FC switches on alternate fabrics. This provides redundancy in the paths for accessing the array LUNs.

Related information

- Configuring switch zoning enables you to define which array LUNs can be viewed by a specific ONTAP system in the MetroCluster configuration.

  Switch zoning in a MetroCluster configuration with array LUNs

- In a MetroCluster configuration with array LUNs, you must connect the storage array ports that form a redundant port pair to alternate FC switches.

  Example of cabling storage array ports to FC switches in a two-node MetroCluster configuration

  Example of cabling storage array ports to FC switches in a four-node MetroCluster configuration

  Example of cabling storage array ports to FC switches in an eight-node MetroCluster configuration

Example of cabling storage array ports to FC switches in a two-node MetroCluster configuration

In a MetroCluster configuration with array LUNs, you must connect the storage array ports that form a redundant port pair to alternate FC switches.

The following illustration shows the connections between storage arrays and FC switches in a two-node fabric-attached MetroCluster configuration with array LUNs:

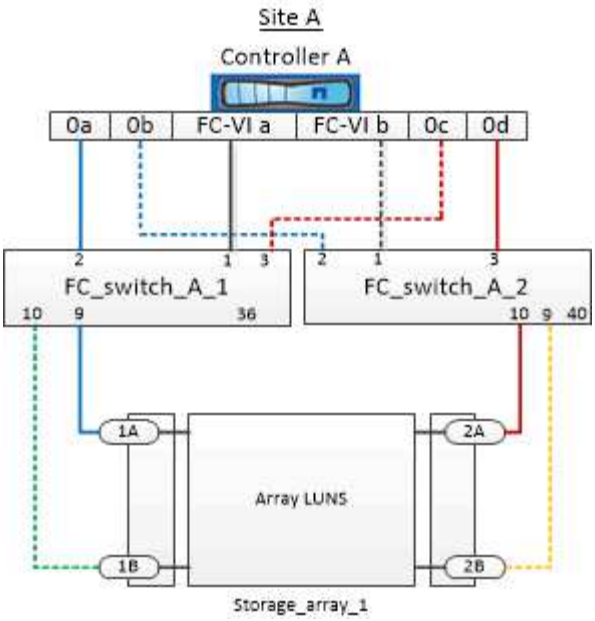

The connections between storage array ports and FC switch ports are similar for both stretch and fabric-attached variants of two-node MetroCluster configurations with array LUNs.

> If you plan to use disks in addition to array LUNs in your MetroCluster configuration, you must use the switch ports specified for the configuration with disks.
>
> Port assignments for FC switches when using ONTAP 9.1 and later

In the illustration, the redundant array port pairs for both the sites are as follows:

- Storage array at Site A:
  - Ports 1A and 2A
  - Ports 1B and 2B
- Storage array at Site B:
  - Ports 1A' and 2A'
  - Ports 1B' and 2B'

FC_switch_A_1 at Site A and FC_switch_B_1 at Site B are connected to form fabric_1. Similarly, FC_switch_A_2 at Site A and FC_switch_B_2 are connected to form fabric_2.

The following table lists the connections between the storage array ports and the FC switches for the example MetroCluster illustration:

Array LUN ports	FC switch ports	Switch fabrics
Site A		
1A	FC_switch_A_1, Port 9	fabric_1
2A	FC_switch_A_2, Port 10	fabric_2
1B	FC_switch_A_1, Port 10	fabric_1

2B	FC_switch_A_2, Port 9	fabric_2
Site B		
1A'	FC_switch_B_1, Port 9	fabric_1
2A'	FC_switch_B_2, Port 10	fabric_2
1B'	FC_switch_B_1, Port 10	fabric_1
2B'	FC_switch_B_2, Port 9	fabric_2

Example of cabling storage array ports to FC switches in a four-node MetroCluster configuration

In a MetroCluster configuration with array LUNs, you must connect the storage array ports that form a redundant port pair to alternate FC switches.

The following reference illustration shows the connections between storage arrays and FC switches in a four-node MetroCluster configuration with array LUNs:

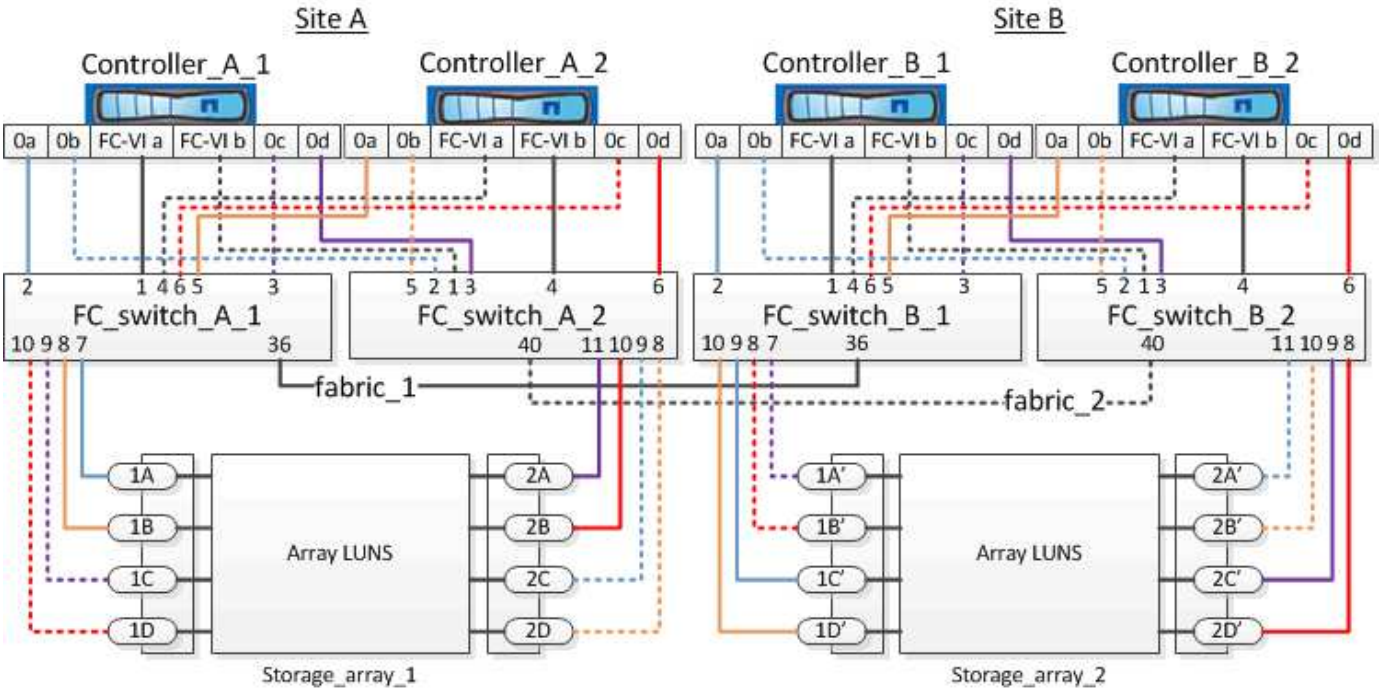

> If you plan to use disks in addition to array LUNs in your MetroCluster configuration, you must use the switch ports specified for the configuration with disks.
>
> Port assignments for FC switches when using ONTAP 9.1 and later

In the illustration, the redundant array port pairs for both the sites are as follows:

- Storage array at Site A:

    - Ports 1A and 2A
    - Ports 1B and 2B
    - Ports 1C and 2C
    - Ports 1D and 2D
- Storage array at Site B:
    - Ports 1A' and 2A'
    - Ports 1B' and 2B'
    - Ports 1C' and 2C'
    - Ports 1D' and 2D'

FC_switch_A_1 at Site A and FC_switch_B_1 at Site B are connected to form fabric_1. Similarly, FC_switch_A_2 at Site A and FC_switch_B_2 are connected to form fabric_2.

The following table lists the connections between the storage array ports and the FC switches for the MetroCluster illustration:

Array LUN ports	FC switch ports	Switch fabrics
Site A		
1A	FC_switch_A_1, Port 7	fabric_1
2A	FC_switch_A_2, Port 11	fabric_2
1B	FC_switch_A_1, Port 8	fabric_1
2B	FC_switch_A_2, Port 10	fabric_2
1C	FC_switch_A_1, Port 9	fabric_1
2C	FC_switch_A_2, Port 9	fabric_2
1D	FC_switch_A_1, Port 10	fabric_1
2D	FC_switch_A_2, Port 8	fabric_2
Site B		
1A'	FC_switch_B_1, Port 7	fabric_1
2A'	FC_switch_B_2, Port 11	fabric_2
1B'	FC_switch_B_1, Port 8	fabric_1
2B'	FC_switch_B_2, Port 10	fabric_2

1C'	FC_switch_B_1, Port 9	fabric_1
2C'	FC_switch_B_2, Port 9	fabric_2
1D'	FC_switch_B_1, Port 10	fabric_1
2D'	FC_switch_B_2, Port 8	fabric_2

Example of cabling storage array ports to FC switches in an eight-node MetroCluster configuration

In a MetroCluster configuration with array LUNs, you must connect the storage array ports that form a redundant port pair to alternate FC switches.

An eight-node MetroCluster configuration consists of two four-node DR groups. The first DR group consists of the following nodes:

- controller_A_1
- controller_A_2
- controller_B_1
- controller_B_2

The second DR group consists of the following nodes:

- controller_A_3
- controller_A_4
- controller_B_3
- controller_B_4

To cable the array ports for the first DR group, you can use the cabling examples for a four-node MetroCluster configuration for the first DR group.

Example of cabling storage array ports to FC switches in a four-node MetroCluster configuration

To cable the array ports for the second DR group, follow the same examples and extrapolate for the FC-VI ports and FC initiator ports belonging to the controllers in the second DR group.

Copyright information

Copyright © 2024 NetApp, Inc. All Rights Reserved. Printed in the U.S. No part of this document covered by copyright may be reproduced in any form or by any means—graphic, electronic, or mechanical, including photocopying, recording, taping, or storage in an electronic retrieval system—without prior written permission of the copyright owner.

Software derived from copyrighted NetApp material is subject to the following license and disclaimer:

THIS SOFTWARE IS PROVIDED BY NETAPP “AS IS” AND WITHOUT ANY EXPRESS OR IMPLIED WARRANTIES, INCLUDING, BUT NOT LIMITED TO, THE IMPLIED WARRANTIES OF MERCHANTABILITY AND FITNESS FOR A PARTICULAR PURPOSE, WHICH ARE HEREBY DISCLAIMED. IN NO EVENT SHALL NETAPP BE LIABLE FOR ANY DIRECT, INDIRECT, INCIDENTAL, SPECIAL, EXEMPLARY, OR CONSEQUENTIAL DAMAGES (INCLUDING, BUT NOT LIMITED TO, PROCUREMENT OF SUBSTITUTE GOODS OR SERVICES; LOSS OF USE, DATA, OR PROFITS; OR BUSINESS INTERRUPTION) HOWEVER CAUSED AND ON ANY THEORY OF LIABILITY, WHETHER IN CONTRACT, STRICT LIABILITY, OR TORT (INCLUDING NEGLIGENCE OR OTHERWISE) ARISING IN ANY WAY OUT OF THE USE OF THIS SOFTWARE, EVEN IF ADVISED OF THE POSSIBILITY OF SUCH DAMAGE.

NetApp reserves the right to change any products described herein at any time, and without notice. NetApp assumes no responsibility or liability arising from the use of products described herein, except as expressly agreed to in writing by NetApp. The use or purchase of this product does not convey a license under any patent rights, trademark rights, or any other intellectual property rights of NetApp.

The product described in this manual may be protected by one or more U.S. patents, foreign patents, or pending applications.

LIMITED RIGHTS LEGEND: Use, duplication, or disclosure by the government is subject to restrictions as set forth in subparagraph (b)(3) of the Rights in Technical Data -Noncommercial Items at DFARS 252.227-7013 (FEB 2014) and FAR 52.227-19 (DEC 2007).

Data contained herein pertains to a commercial product and/or commercial service (as defined in FAR 2.101) and is proprietary to NetApp, Inc. All NetApp technical data and computer software provided under this Agreement is commercial in nature and developed solely at private expense. The U.S. Government has a non-exclusive, non-transferrable, nonsublicensable, worldwide, limited irrevocable license to use the Data only in connection with and in support of the U.S. Government contract under which the Data was delivered. Except as provided herein, the Data may not be used, disclosed, reproduced, modified, performed, or displayed without the prior written approval of NetApp, Inc. United States Government license rights for the Department of Defense are limited to those rights identified in DFARS clause 252.227-7015(b) (FEB 2014).

Trademark information

NETAPP, the NETAPP logo, and the marks listed at http://www.netapp.com/TM are trademarks of NetApp, Inc. Other company and product names may be trademarks of their respective owners.