# Cable the FC-VI and HBA ports in a MetroCluster configuration with array LUNs

ONTAP MetroCluster

NetApp
March 22, 2024

This PDF was generated from https://docs.netapp.com/us-en/ontap-metrocluster/install-fc/task_cable_the_fc_vi_and_hba_ports_to_switches_in_a_two_node_fabric_attached_mcc_configuration_with_array_luns.html on March 22, 2024. Always check docs.netapp.com for the latest.

# Table of Contents

Cable the FC-VI and HBA ports in a MetroCluster configuration with array LUNs . . . . . 1
Cabling the FC-VI and HBA ports in a two-node fabric-attached MetroCluster configuration with array LUNs . . . . . 1
Cabling the FC-VI and HBA ports in a four-node fabric-attached MetroCluster configuration with array LUNs . . . . . 2
Cabling the FC-VI and HBA ports in an eight-node fabric-attached MetroCluster configuration with array LUNs . . . . . 5

# Cable the FC-VI and HBA ports in a MetroCluster configuration with array LUNs

## Cabling the FC-VI and HBA ports in a two-node fabric-attached MetroCluster configuration with array LUNs

If you are setting up a two-node fabric-attached MetroCluster configuration with array LUNs, you must cable the FC-VI ports and the HBA ports to the switch ports.

**About this task**

- You must repeat this task for each controller at both of the MetroCluster sites.
- If you plan to use disks in addition to array LUNs in your MetroCluster configuration, you must use the HBA ports and switch ports specified for configuration with disks.
  - Port assignments for FC switches when using ONTAP 9.1 and later
  - Port assignments for FC switches when using ONTAP 9.0

**Steps**

1. Cable the FC-VI ports from the controller to alternate switch ports.
2. Perform the controller-to-switch cabling at both of the MetroCluster sites.

   You must ensure redundancy in connections from the controller to the switches. Therefore, for each controller at a site, you must ensure that both of the HBA ports in the same port pair are connected to alternate FC switches.

   The following example shows the connections between the HBA ports on Controller A and ports on FC_switch_A_1 and FC_switch_A_2:

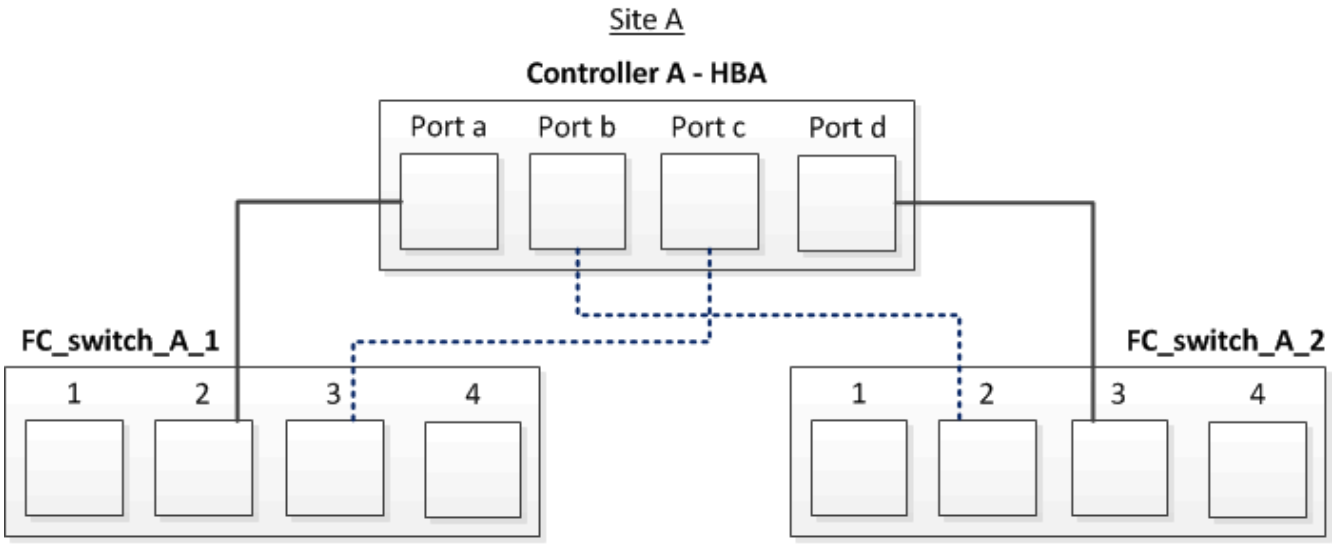


   The following table lists the connections between the HBA ports and the FC switch ports in the illustration:

| HBA ports | Switch ports |
|---|---|
| **Port pair** | |

| | |
|---|---|
| Port a | FC_switch_A_1, Port 2 |
| Port d | FC_switch_A_2, Port 3 |
| **Port pair** | |
| Port b | FC_switch_A_2, Port 2 |
| Port c | FC_switch_A_1, Port 3 |

**After you finish**

You should cable the ISLs between the FC switches across the MetroCluster sites.

# Cabling the FC-VI and HBA ports in a four-node fabric-attached MetroCluster configuration with array LUNs

If you are setting up a four-node fabric-attached MetroCluster configuration with array LUNs, you must cable the FC-VI ports and the HBA ports to the switch ports.

**About this task**

- You must repeat this task for each controller at both of the MetroCluster sites.
- If you plan to use disks in addition to array LUNs in your MetroCluster configuration, you must use the HBA ports and switch ports specified for configuration with disks.
  - Port assignments for FC switches when using ONTAP 9.1 and later
  - Port assignments for FC switches when using ONTAP 9.0

**Steps**

1. Cable the FC-VI ports from each controller to the ports on alternate FC switches.

   The following example shows the connections between the FC-VI ports and switch ports at Site A:

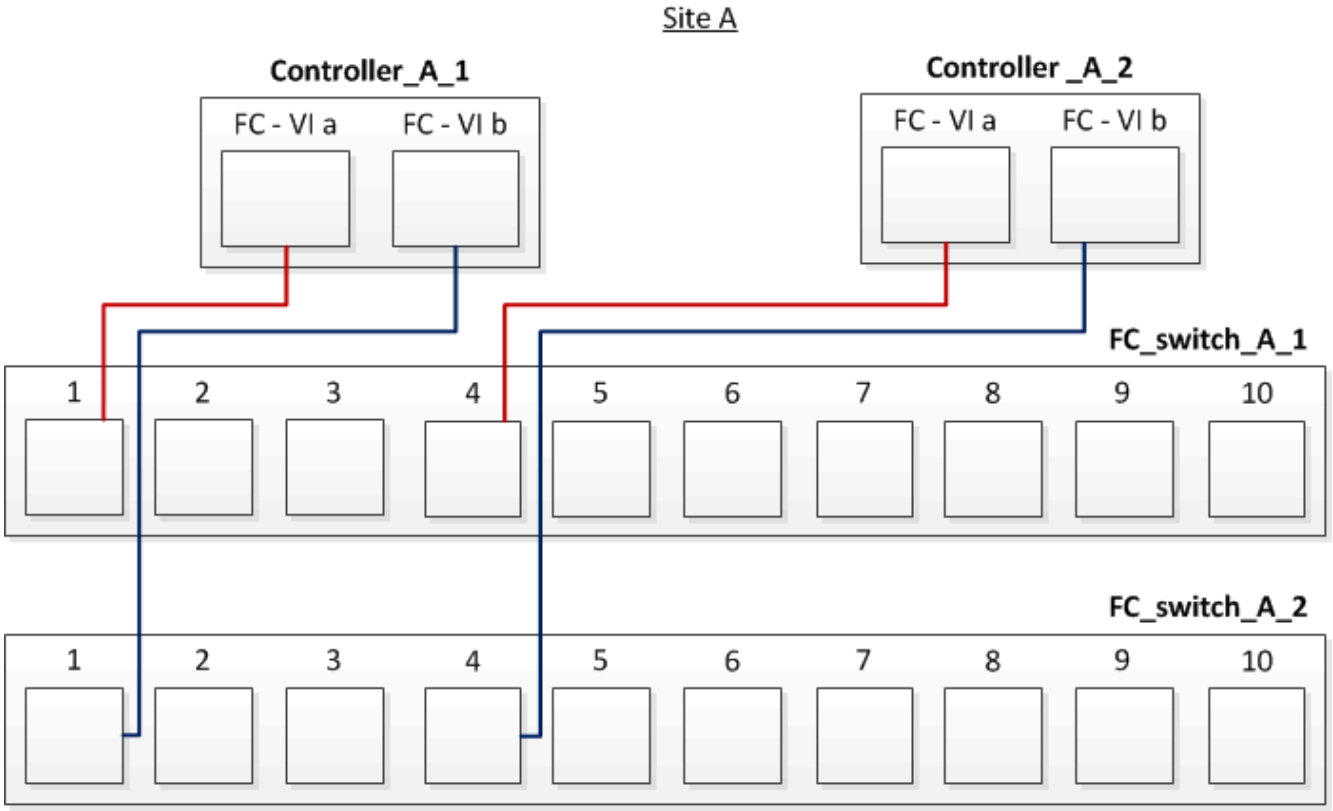


2. Perform the controller-to-switch cabling at both of the MetroCluster sites.

   You must ensure redundancy in connections from the controller to the switches. Therefore, for each controller at a site, you must ensure that both of the HBA ports in the same port pair are connected to alternate FC switches.

   The following example shows the connections between the HBA ports and switch ports at Site A:

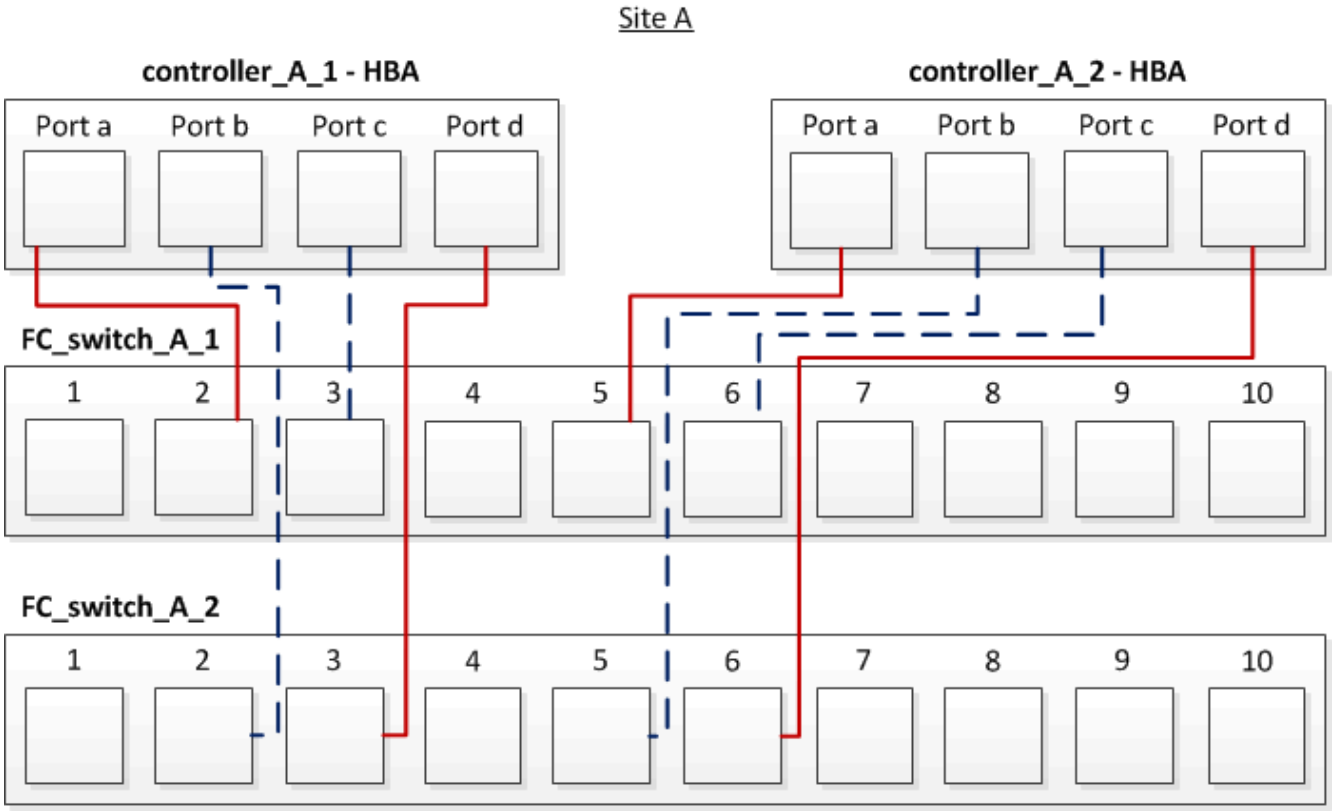


The following table lists the connections between the HBA ports on controller_A_1 and the FC switch ports in the illustration:

| HBA ports | Switch ports |
|---|---|
| **Port pair** | |
| Port a | FC_switch_A_1, Port 2 |
| Port d | FC_switch_A_2, Port 3 |
| **Port pair** | |
| Port b | FC_switch_A_2, Port 2 |
| Port c | FC_switch_A_1, Port 3 |

The following table lists the connections between the HBA ports on controller_A_2 and the FC switch ports in the illustration:

| HBA ports | Switch ports |
|---|---|
| **Port pair** | |
| Port a | FC_switch_A_1, Port 5 |
| Port d | FC_switch_A_2, Port 6 |

| Port pair | |
|---|---|
| Port b | FC_switch_A_2, Port 5 |
| Port c | FC_switch_A_1, Port 6 |

**After you finish**

You should cable the ISLs between the FC switches across the MetroCluster sites.

**Related information**

When you are connecting ONTAP systems to FC switches for setting up a MetroCluster configuration with array LUNs, you must connect FC-VI and HBA ports from each controller to specific switch ports.

Switch ports required for a MetroCluster configuration with array LUNs

# Cabling the FC-VI and HBA ports in an eight-node fabric-attached MetroCluster configuration with array LUNs

If you are setting up an eight-node fabric-attached MetroCluster configuration with array LUNs, you must cable the FC-VI ports and the HBA ports to the switch ports.

**About this task**

- You must repeat this task for each controller at both of the MetroCluster sites.
- If you plan to use disks in addition to array LUNs in your MetroCluster configuration, you must use the HBA ports and switch ports specified for configuration with disks.
  - Port assignments for FC switches when using ONTAP 9.1 and later
  - Port assignments for FC switches when using ONTAP 9.0

**Step**

1. Cable the FC-VI ports and HBA ports from each controller to the ports on alternate FC switches. Refer to the following tables:

## Cabling configurations for FibreBridge 7500N or 7600N using both FC ports

| Configurations using FibreBridge 7500N or 7600N using both FC ports (FC1 and FC2) | | | | |
|---|---|---|---|---|
| MetroCluster 1 or DR Group 1 | | | | |
| **Component** | **Port** | **Brocade switch models 6505, 6510, 6520, 7810, 7840, G610, G620, G620-1, G630, G630-1, and DCX 8510-8** | | **Brocade switch G720** |
| | | **Connects to FC_switch…** | **Connects to switch port…** | **Connects to switch port…** |

| | | | | | |
|---|---|---|---|---|---|
| controller_x_1 | | FC-VI port a | 1 | 0 | 0 |
| | | FC-VI port b | 2 | 0 | 0 |
| | | FC-VI port c | 1 | 1 | 1 |
| | | FC-VI port d | 2 | 1 | 1 |
| | | HBA port a | 1 | 2 | 8 |
| | | HBA port b | 2 | 2 | 8 |
| | | HBA port c | 1 | 3 | 9 |
| | | HBA port d | 2 | 3 | 9 |
| controller_x_2 | | FC-VI port a | 1 | 4 | 4 |
| | | FC-VI port b | 2 | 4 | 4 |
| | | FC-VI port c | 1 | 5 | 5 |
| | | FC-VI port d | 2 | 5 | 5 |
| | | HBA port a | 1 | 6 | 12 |
| | | HBA port b | 2 | 6 | 12 |
| | | HBA port c | 1 | 7 | 13 |
| | | HBA port d | 2 | 7 | 13 |
| Stack 1 | bridge_x_1a | FC1 | 1 | 8 | 10 |
| | | FC2 | 2 | 8 | 10 |
| | bridge_x_1B | FC1 | 1 | 9 | 11 |
| | | FC2 | 2 | 9 | 11 |

| | | | | | |
|---|---|---|---|---|---|
| Stack 2 | bridge_x_2a | FC1 | 1 | 10 | 14 |
| | | FC2 | 2 | 10 | 14 |
| | bridge_x_2B | FC1 | 1 | 11 | 15 |
| | | FC2 | 2 | 11 | 15 |
| Stack 3 | bridge_x_3a | FC1 | 1 | 12* | 16 |
| | | FC2 | 2 | 12* | 16 |
| | bridge_x_3B | FC1 | 1 | 13* | 17 |
| | | FC2 | 2 | 13* | 17 |
| Stack y | bridge_x_ya | FC1 | 1 | 14* | 20 |
| | | FC2 | 2 | 14* | 20 |
| | bridge_x_yb | FC1 | 1 | 15* | 21 |
| | | FC2 | 2 | 15* | 21 |
| *** Ports 12 through 15 are reserved for the second MetroCluster or DR group on the Brocade 7840 switch.** | | | | | |
| **Note: Additional bridges can be cabled to ports 16, 17, 20 and 21 in G620, G630, G620-1 and G630-1 switches.** | | | | | |

**After you finish**

You should cable the ISLs between the FC switches across the MetroCluster sites.

## Cabling configurations for Cisco 9250i

| **Cisco 9250i*** | | | |
|---|---|---|---|
| **Component** | **Port** | **Switch 1** | **Switch 2** |

| | | | |
|---|---|---|---|
| controller_x_1 | FC-VI port a | 1 | - |
| | FC-VI port b | - | 1 |
| | HBA port a | 2 | - |
| | HBA port b | - | 2 |
| | HBA port c | 3 | - |
| | HBA port d | - | 3 |
| controller_x_2 | FC-VI port a | 4 | - |
| | FC-VI port b | - | 4 |
| | HBA port a | 5 | - |
| | HBA port b | - | 5 |
| | HBA port c | 6 | - |
| | HBA port d | - | 6 |
| controller_x_3 | FC-VI port a | 7 | - |
| | FC-VI port b | - | 7 |
| | HBA port a | 8 | - |
| | HBA port b | - | 8 |
| | HBA port c | 9 | - |
| | HBA port d | - | 9 |

| | | | |
|---|---|---|---|
| controller_x_4 | FC-VI port a | 10 | - |
| | FC-VI port b | - | 10 |
| | HBA port a | 11 | - |
| | HBA port b | - | 11 |
| | HBA port c | 13 | - |
| | HBA port d | - | 13 |

**After you finish**

You should cable the ISLs between the FC switches across the MetroCluster sites.

**Copyright information**

Copyright © 2024 NetApp, Inc. All Rights Reserved. Printed in the U.S. No part of this document covered by copyright may be reproduced in any form or by any means—graphic, electronic, or mechanical, including photocopying, recording, taping, or storage in an electronic retrieval system—without prior written permission of the copyright owner.

Software derived from copyrighted NetApp material is subject to the following license and disclaimer:

THIS SOFTWARE IS PROVIDED BY NETAPP “AS IS” AND WITHOUT ANY EXPRESS OR IMPLIED WARRANTIES, INCLUDING, BUT NOT LIMITED TO, THE IMPLIED WARRANTIES OF MERCHANTABILITY AND FITNESS FOR A PARTICULAR PURPOSE, WHICH ARE HEREBY DISCLAIMED. IN NO EVENT SHALL NETAPP BE LIABLE FOR ANY DIRECT, INDIRECT, INCIDENTAL, SPECIAL, EXEMPLARY, OR CONSEQUENTIAL DAMAGES (INCLUDING, BUT NOT LIMITED TO, PROCUREMENT OF SUBSTITUTE GOODS OR SERVICES; LOSS OF USE, DATA, OR PROFITS; OR BUSINESS INTERRUPTION) HOWEVER CAUSED AND ON ANY THEORY OF LIABILITY, WHETHER IN CONTRACT, STRICT LIABILITY, OR TORT (INCLUDING NEGLIGENCE OR OTHERWISE) ARISING IN ANY WAY OUT OF THE USE OF THIS SOFTWARE, EVEN IF ADVISED OF THE POSSIBILITY OF SUCH DAMAGE.

NetApp reserves the right to change any products described herein at any time, and without notice. NetApp assumes no responsibility or liability arising from the use of products described herein, except as expressly agreed to in writing by NetApp. The use or purchase of this product does not convey a license under any patent rights, trademark rights, or any other intellectual property rights of NetApp.

The product described in this manual may be protected by one or more U.S. patents, foreign patents, or pending applications.

LIMITED RIGHTS LEGEND: Use, duplication, or disclosure by the government is subject to restrictions as set forth in subparagraph (b)(3) of the Rights in Technical Data -Noncommercial Items at DFARS 252.227-7013 (FEB 2014) and FAR 52.227-19 (DEC 2007).

Data contained herein pertains to a commercial product and/or commercial service (as defined in FAR 2.101) and is proprietary to NetApp, Inc. All NetApp technical data and computer software provided under this Agreement is commercial in nature and developed solely at private expense. The U.S. Government has a non-exclusive, non-transferrable, nonsublicensable, worldwide, limited irrevocable license to use the Data only in connection with and in support of the U.S. Government contract under which the Data was delivered. Except as provided herein, the Data may not be used, disclosed, reproduced, modified, performed, or displayed without the prior written approval of NetApp, Inc. United States Government license rights for the Department of Defense are limited to those rights identified in DFARS clause 252.227-7015(b) (FEB 2014).

**Trademark information**

NETAPP, the NETAPP logo, and the marks listed at http://www.netapp.com/TM are trademarks of NetApp, Inc. Other company and product names may be trademarks of their respective owners.