Configure the MetroCluster hardware components

ONTAP MetroCluster

NetApp
March 22, 2024

This PDF was generated from https://docs.netapp.com/us-en/ontap-metrocluster/install-ip/concept_parts_of_an_ip_mcc_configuration_mcc_ip.html on March 22, 2024. Always check docs.netapp.com for the latest.

Table of Contents

Configure the MetroCluster hardware components . . . 1
Parts of a MetroCluster IP configuration . . . 1
Required MetroCluster IP components and naming conventions . . . 5
Racking the hardware components . . . 9
Cable the MetroCluster IP switches . . . 10
Cabling the controller peering, data, and management ports . . . 26
Configure the MetroCluster IP switches . . . 27

Configure the MetroCluster hardware components

Parts of a MetroCluster IP configuration

As you plan your MetroCluster IP configuration, you should understand the hardware components and how they interconnect.

Key hardware elements

A MetroCluster IP configuration includes the following key hardware elements:

- Storage controllers

  The storage controllers are configured as two two-node clusters.

- IP network

  This back-end IP network provides connectivity for two distinct uses:

  - Standard cluster connectivity for intra-cluster communications.

    This is the same cluster switch functionality used in non-MetroCluster switched ONTAP clusters.

  - MetroCluster back-end connectivity for replication of storage data and non-volatile cache.

- Cluster peering network

  The cluster peering network provides connectivity for mirroring of the cluster configuration, which includes storage virtual machine (SVM) configuration. The configuration of all of the SVMs on one cluster is mirrored to the partner cluster.

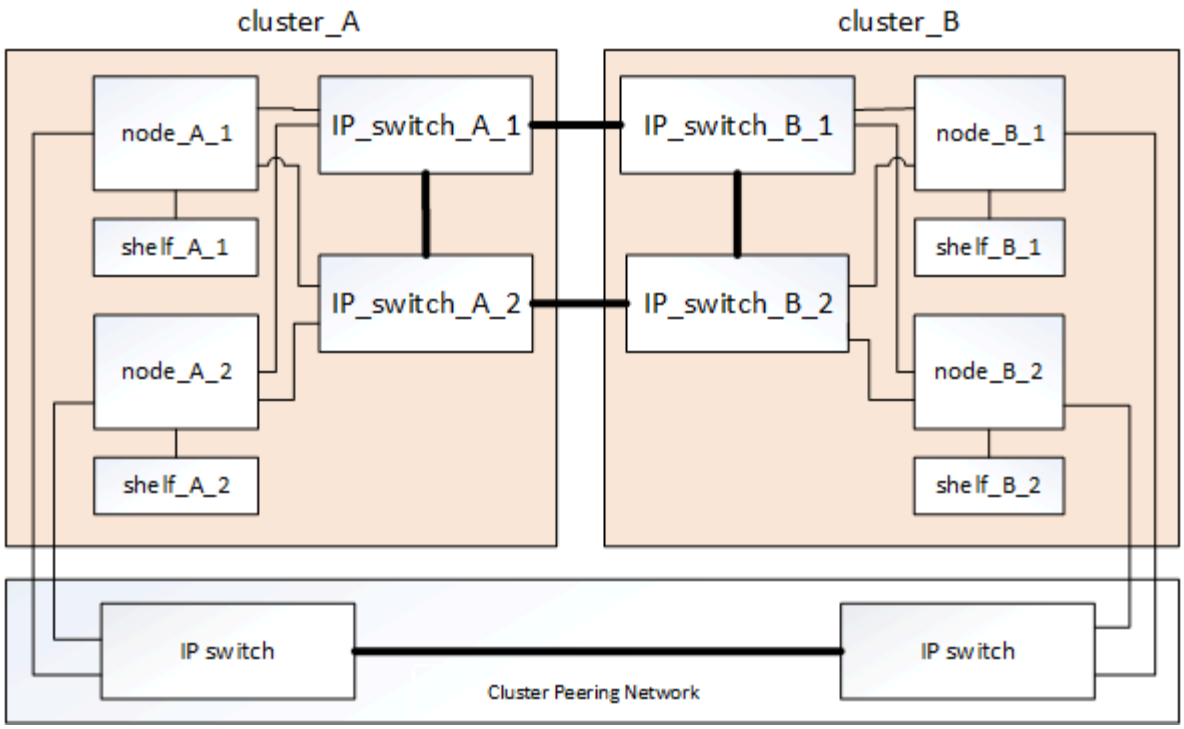

Disaster Recovery (DR) groups

A MetroCluster IP configuration consists of one DR group of four nodes.

The following illustration shows the organization of nodes in a four-node MetroCluster configuration:

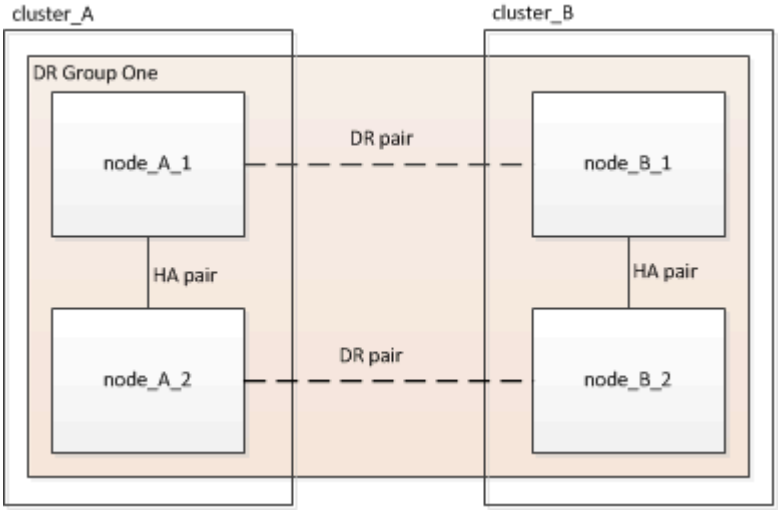

Illustration of the local HA pairs in a MetroCluster configuration

Each MetroCluster site consists of storage controllers configured as an HA pair. This allows local redundancy so that if one storage controller fails, its local HA partner can take over. Such failures can be handled without a MetroCluster switchover operation.

Local HA failover and giveback operations are performed with the storage failover commands, in the same manner as a non-MetroCluster configuration.

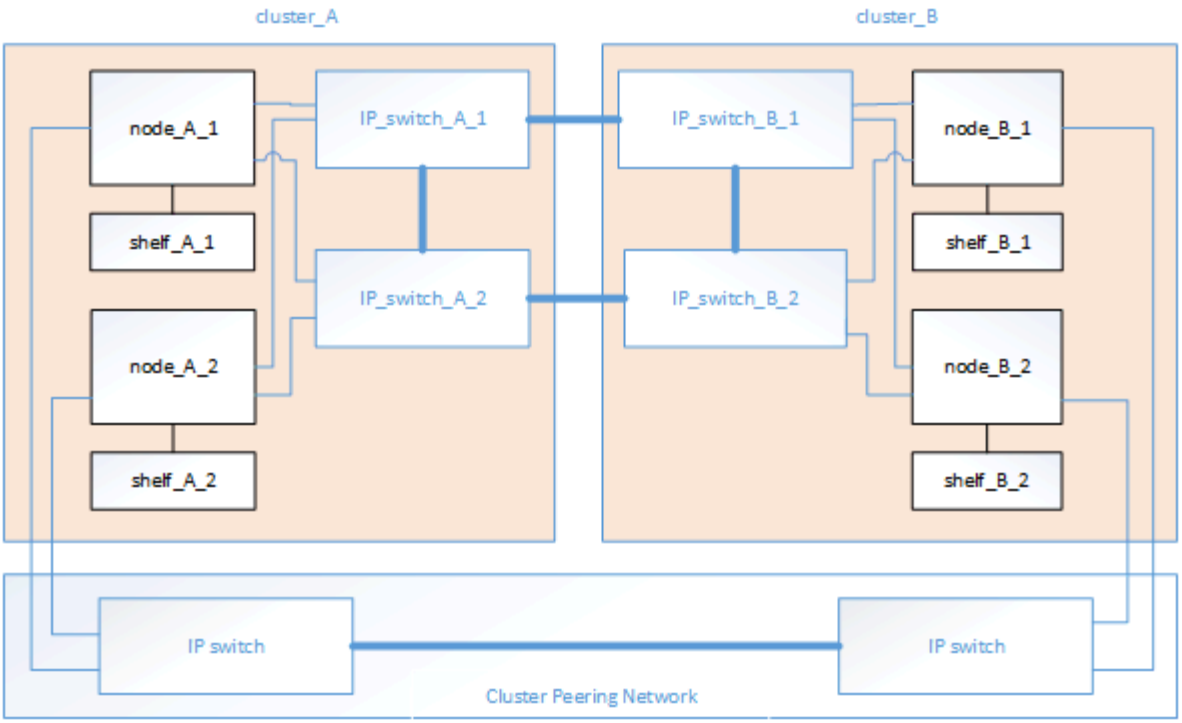

Related information

ONTAP concepts

Illustration of the MetroCluster IP and cluster interconnect network

ONTAP clusters typically include a cluster interconnect network for traffic between the nodes in the cluster. In MetroCluster IP configurations, this network is also used for carrying data replication traffic between the MetroCluster sites.

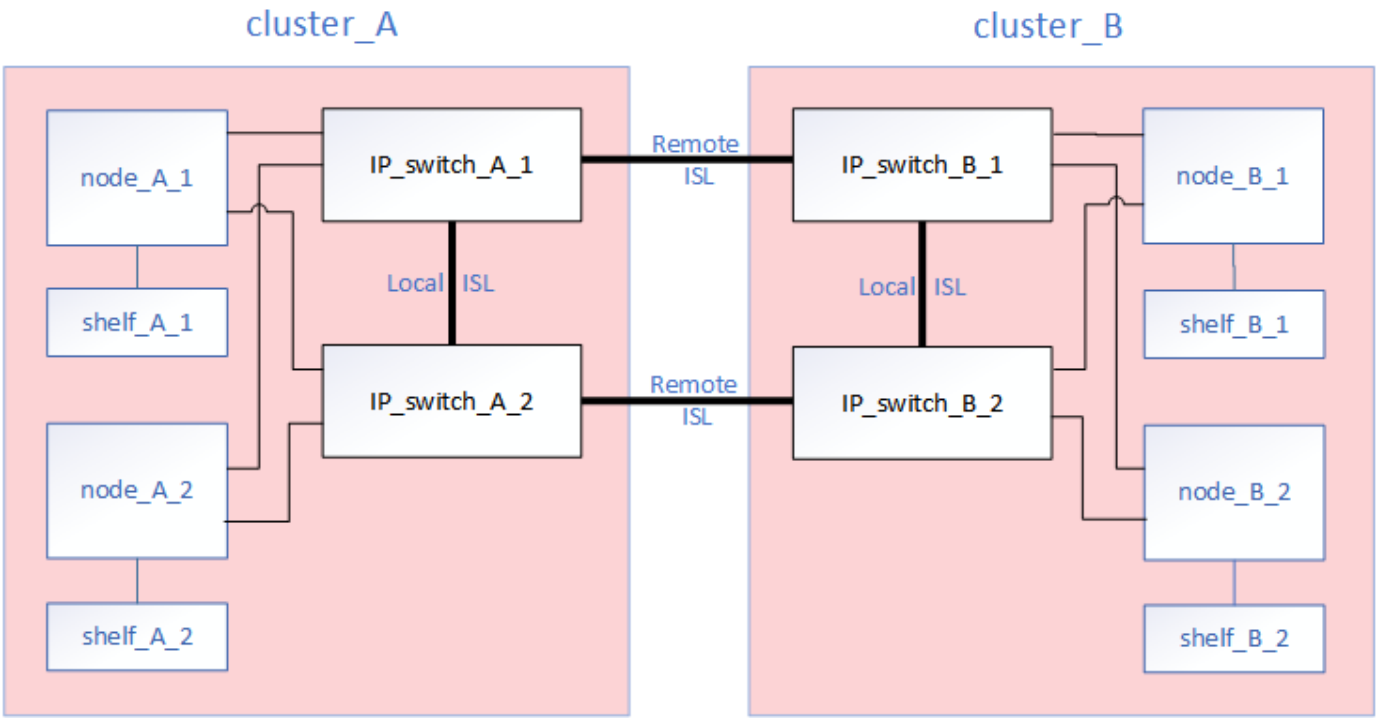

Each node in the MetroCluster IP configuration has specialized LIFs for connection to the back-end IP network:

- Two MetroCluster IP interfaces
- One intercluster LIF

The following illustration shows these interfaces. The port usage shown is for an AFF A700 or FAS9000 system.

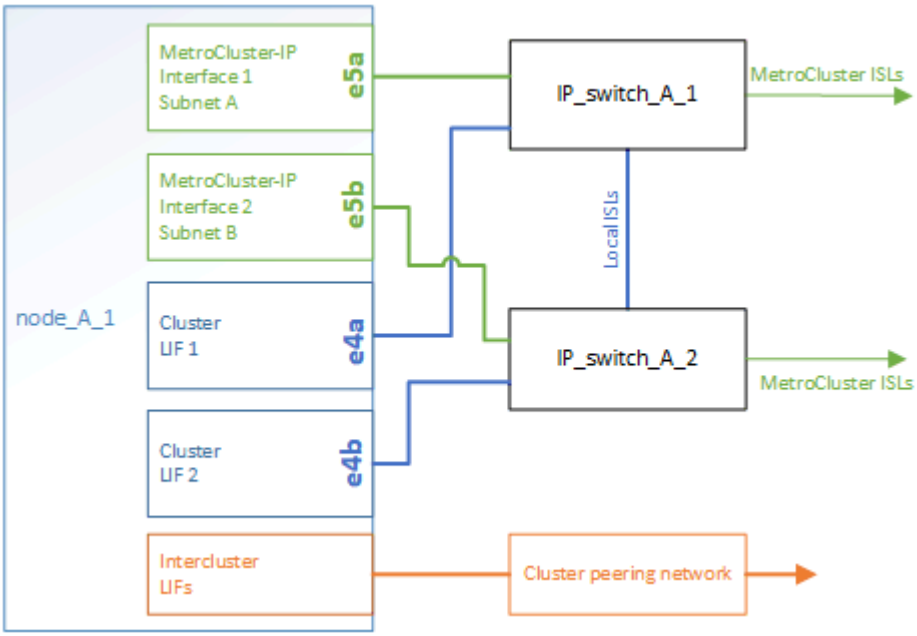

Related information

Considerations for MetroCluster IP configurations

Illustration of the cluster peering network

The two clusters in the MetroCluster configuration are peered through a customer-provided cluster peering network. Cluster peering supports the synchronous mirroring of storage virtual machines (SVMs, formerly known as Vservers) between the sites.

Intercluster LIFs must be configured on each node in the MetroCluster configuration, and the clusters must be configured for peering. The ports with the intercluster LIFs are connected to the customer-provided cluster peering network. Replication of the SVM configuration is carried out over this network through the Configuration Replication Service.

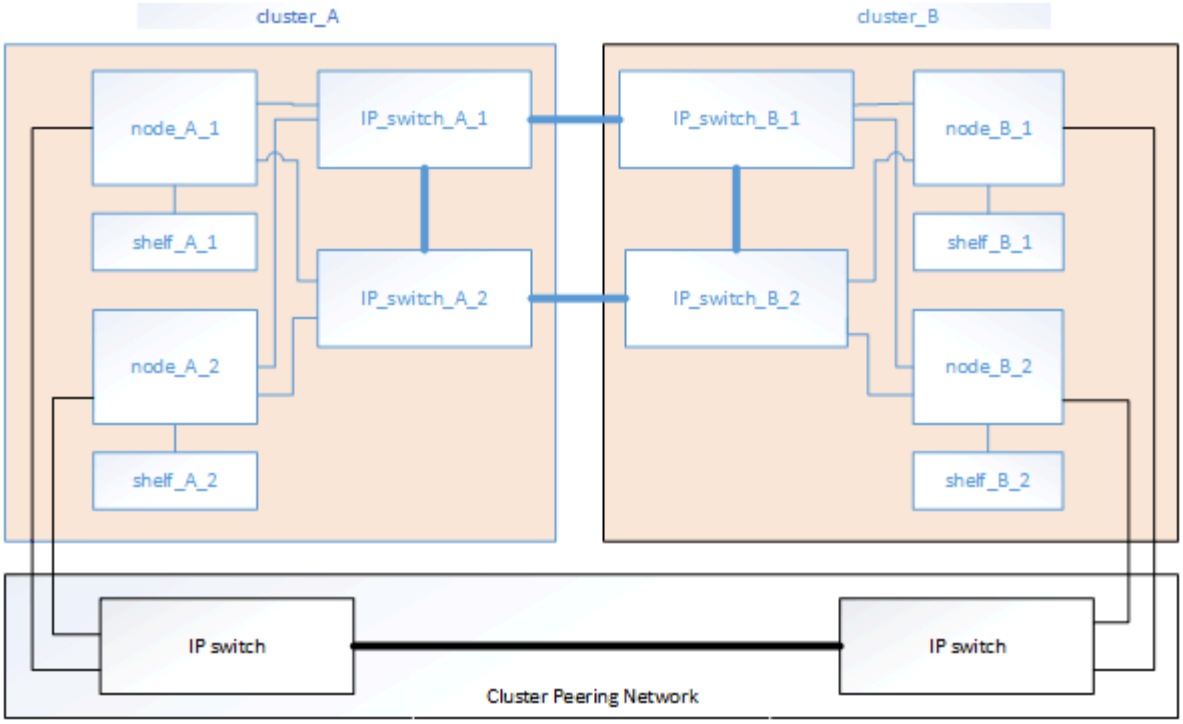

Related information

Cluster and SVM peering express configuration

Considerations for configuring cluster peering

Cabling the cluster peering connections

Peering the clusters

Required MetroCluster IP components and naming conventions

When planning your MetroCluster IP configuration, you must understand the required and supported hardware and software components. For convenience and clarity, you should also understand the naming conventions used for components in examples throughout the documentation.

Supported software and hardware

The hardware and software must be supported for the MetroCluster IP configuration.

NetApp Hardware Universe

When using AFF systems, all controller modules in the MetroCluster configuration must be configured as AFF systems.

Hardware redundancy requirements in a MetroCluster IP configuration

Because of the hardware redundancy in the MetroCluster IP configuration, there are two of each component at each site. The sites are arbitrarily assigned the letters A and B, and the individual components are arbitrarily

assigned the numbers 1 and 2.

ONTAP cluster requirements in a MetroCluster IP configuration

MetroCluster IP configurations require two ONTAP clusters, one at each MetroCluster site.

Naming must be unique within the MetroCluster configuration.

Example names:

- Site A: cluster_A
- Site B: cluster_B

IP switch requirements in a MetroCluster IP configuration

MetroCluster IP configurations require four IP switches. The four switches form two switch storage fabrics that provide the ISL between each of the clusters in the MetroCluster IP configuration.

The IP switches also provide intracluster communication among the controller modules in each cluster.

Naming must be unique within the MetroCluster configuration.

Example names:

- Site A: cluster_A
  - IP_switch_A_1
  - IP_switch_A_2
- Site B: cluster_B
  - IP_switch_B_1
  - IP_switch_B_2

Controller module requirements in a MetroCluster IP configuration

MetroCluster IP configurations require four or eight controller modules.

The controller modules at each site form an HA pair. Each controller module has a DR partner at the other site.

Each controller module must be running the same ONTAP version. Supported platform models depend on the ONTAP version:

- New MetroCluster IP installations on FAS systems are not supported in ONTAP 9.4.

  Existing MetroCluster IP configurations on FAS systems can be upgraded to ONTAP 9.4.

- Beginning with ONTAP 9.5, new MetroCluster IP installations on FAS systems are supported.
- Beginning with ONTAP 9.4, controller modules configured for ADP are supported.

Example names

The following example names are used in the documentation:

- Site A: cluster_A
  - controller_A_1
  - controller_A_2
- Site B: cluster_B
  - controller_B_1
  - controller_B_2

Gigabit Ethernet adapter requirements in a MetroCluster IP configuration

MetroCluster IP configurations use a 40/100 Gbps or 10/25 Gbps Ethernet adapter for the IP interfaces to the IP switches used for the MetroCluster IP fabric.

Platform model	Required Gigabit Ethernet adapter	Required slot for adapter	Ports
AFF A900, ASA A900, and FAS9500	X91146A	Slot 5, Slot 7	e5b, e7b
AFF A700 and FAS9000	X91146A-C	Slot 5	e5a, e5b
AFF A800, AFF C800, ASA A800, and ASA C800	X1146A/onboard ports	Slot 1	e0b. e1b
FAS8300, AFF A400, ASA A400, ASA C400, and AFF C400	X1146A	Slot 1	e1a, e1b
AFF A300 and FAS8200	X1116A	Slot 1	e1a, e1b
FAS2750, AFF A150, ASA A150, and AFF A220	Onboard ports	Slot 0	e0a, e0b
FAS500f, AFF A250, ASA A250, ASA C250, and AFF C250	Onboard ports	Slot 0	e0c, e0d
AFF A320	Onboard ports	Slot 0	e0g, e0h

Learn about automatic drive assignment and ADP systems in MetroCluster IP configurations.

Pool and drive requirements (minimum supported)

Eight SAS disk shelves are recommended (four shelves at each site) to allow disk ownership on a per-shelf basis.

A four-node MetroCluster IP configuration requires the minimum configuration at each site:

- Each node has at least one local pool and one remote pool at the site.

- At least seven drives in each pool.

  In a four-node MetroCluster configuration with a single mirrored data aggregate per node, the minimum configuration requires 24 disks at the site.

In a minimum supported configuration, each pool has the following drive layout:

- Three root drives
- Three data drives
- One spare drive

In a minimum supported configuration, at least one shelf is needed per site.

MetroCluster configurations support RAID-DP and RAID4.

Drive location considerations for partially populated shelves

For correct auto-assignment of drives when using shelves that are half populated (12 drives in a 24-drive shelf), drives should be located in slots 0-5 and 18-23.

In a configuration with a partially populated shelf, the drives must be evenly distributed in the four quadrants of the shelf.

Drive location considerations for AFF A800 internal drives

For correct implementation of the ADP feature, the AFF A800 system disk slots must be divided into quarters and the disks must be located symmetrically in the quarters.

An AFF A800 system has 48 drive bays. The bays can be divided into quarters:

- Quarter one:
  - Bays 0 - 5
  - Bays 24 - 29
- Quarter two:
  - Bays 6 - 11
  - Bays 30 - 35
- Quarter three:
  - Bays 12 - 17
  - Bays 36 - 41
- Quarter four:
  - Bays 18 - 23
  - Bays 42 - 47

If this system is populated with 16 drives, they must be symmetrically distributed among the four quarters:

- Four drives in the first quarter: 0, 1, 2, 3
- Four drives in the second quarter: 6, 7, 8, 9

- Four drives in the third quarter: 12, 13, 14, 15
- Four drives in the fourth quarter: 18, 19, 20, 21

Mixing IOM12 and IOM 6 modules in a stack

Your version of ONTAP must support shelf mixing. Refer to the NetApp Interoperability Matrix Tool (IMT) to see if your version of ONTAP supports shelf mixing.

For further details on shelf mixing, see Hot-adding shelves with IOM12 modules to a stack of shelves with IOM6 modules

Racking the hardware components

If you have not received the equipment already installed in cabinets, you must rack the components.

About this task

This task must be performed on both MetroCluster sites.

Steps

1. Plan out the positioning of the MetroCluster components.

   The rack space depends on the platform model of the controller modules, the switch types, and the number of disk shelf stacks in your configuration.

2. Properly ground yourself.
3. Install the controller modules in the rack or cabinet.

   AFF A220/FAS2700 Systems Installation and Setup Instructions

   AFF A250 Systems Installation and Setup Instructions

   AFF A300 Systems Installation and Setup Instructions

   AFF A320 systems: Installation and setup

   AFF A400 Systems Installation and Setup Instructions

   AFF A700 Systems Installation and Setup Instructions

   AFF A800 Systems Installation and Setup Instructions

   FAS500f Systems Installation and Setup Instructions

   FAS8200 Systems Installation and Setup Instructions

   FAS8300 and FAS8700 Systems Installation and Setup Instructions

   FAS9000 Systems Installation and Setup Instructions

1. Install the IP switches in the rack or cabinet.
2. Install the disk shelves, power them on, and then set the shelf IDs.

- You must power-cycle each disk shelf.
- Unique shelf IDs are highly recommended for each SAS disk shelf within each MetroCluster DR group to aid troubleshooting.

> Do not cable disk shelves intended to contain unmirrored aggregates at this time. You must wait to deploy shelves intended for unmirrored aggregates until after the MetroCluster configuration is complete and only deploy them after using the `metrocluster modify -enable-unmirrored-aggr-deployment true` command.

Cable the MetroCluster IP switches

Using the port tables with the RcfFileGenerator tool or multiple MetroCluster configurations

You must understand how to use the information in the port tables to correctly generate your RCF files.

Before you begin

Review these considerations before using the tables:

- The following tables show the port usage for site A. The same cabling is used for site B.
- The switches cannot be configured with ports of different speeds (for example, a mix of 100 Gbps ports and 40 Gbps ports).
- Keep track of the MetroCluster port group (MetroCluster 1, MetroCluster 2, etc.). You will need this information when using the RcfFileGenerator tool as described later in this configuration procedure.
- The RcfFileGenerator for MetroCluster IP also provides a per-port cabling overview for each switch. Use this cabling overview to verify your cabling.

Cabling eight-node MetroCluster configurations

For MetroCluster configuration running ONTAP 9.8 and earlier, some procedures that are performed to transition an upgrade require the addition of a second four-node DR group to the configuration to create a temporary eight-node configuration. Beginning with ONTAP 9.9.1, permanent eight-node MetroCluster configurations are supported.

About this task

For such configurations, you use the same method as described above. Instead of a second MetroCluster, you are cabling an additional four-node DR group.

For example, your configuration includes the following:

- Cisco 3132Q-V switches
- MetroCluster 1: FAS2750 platforms
- MetroCluster 2: AFF A700 platforms (these platforms are being added as a second four-node DR group)

Steps

1. For MetroCluster 1, cable the Cisco 3132Q-V switches using the table for the FAS2750 platform and the rows for MetroCluster 1 interfaces.

2. For MetroCluster 2 (the second DR group), cable the Cisco 3132Q-V switches using the table for the AFF A700 platform and the rows for MetroCluster 2 interfaces.

Platform port assignments for Cisco 3132Q-V switches

The port usage in a MetroCluster IP configuration depends on the switch model and platform type.

Review these guidelines before using the tables:

- If you configure the switch for MetroCluster FC to IP transition, port 5, port 6, port 13, or port 14 can be used to connect the local cluster interfaces of the MetroCluster FC node. Refer to the RcfFileGenerator and the generated cabling files for more details on cabling this configuration. For all other connections, you can use the port usage assignments listed in the tables.

Port usage for FAS2750 or AFF A220 systems and a Cisco 3132Q-V switch

Cabling a FAS2750 or AFF A220 to a Cisco 3132Q-V switch			
Switch Port	Port use	FAS2750 AFF A220	
		IP_Switch_x_1	IP_Switch_x_2
1 - 6	Unused	disabled	
7	ISL, Local Cluster native speed / 40G / 100G	ISL, Local Cluster	
8			
9/1	MetroCluster 1, Shared Cluster and MetroCluster interface	e0a	e0b
9/2-4		disabled	
10/1		e0a	e0b
10/2-4		disabled	
11/1	MetroCluster 2, Shared Cluster and MetroCluster interface	e0a	e0b
11/2-4		disabled	
12/1		e0a	e0b
12/2-4		disabled	
13/1	MetroCluster 3, Shared Cluster and MetroCluster interface	e0a	e0b
13/2-4		disabled	
14/1		e0a	e0b
14/2-4		disabled	
15	ISL, MetroCluster native speed 40G	ISL, MetroCluster	
16			
17			
18			
19			
20			
21/1-4	ISL, MetroCluster breakout mode 10G	ISL, MetroCluster	
22/1-4			
23/1-4			
24/1-4			
25 - 32	Unused	disabled	

Port usage for FAS9000 or AFF A700 systems and a Cisco 3132Q-V switch

Cabling a FAS9000 or AFF A700 to a Cisco 3132Q-V switch			
Switch Port	Port use	FAS9000 AFF A700	
		IP_Switch_x_1	IP_Switch_x_2
1	MetroCluster 1, Local Cluster interface	e4a	e4e / e8a
2			
3	MetroCluster 2, Local Cluster interface	e4a	e4e / e8a
4			
5	MetroCluster 3, Local Cluster interface	e4a	e4e / e8a
6			
7	ISL, Local Cluster native speed 40G	ISL, Local Cluster	
8			
9	MetroCluster 1, MetroCluster interface	e5a	e5b
10			
11	MetroCluster 2, MetroCluster interface	e5a	e5b
12			
13	MetroCluster 3, MetroCluster interface	e5a	e5b
14			
15	ISL, MetroCluster native speed 40G	ISL, MetroCluster	
16			
17			
18			
19			
20			
21/1-4	ISL, MetroCluster breakout mode 10G	ISL, MetroCluster	
22/1-4			
23/1-4			
24/1-4			
25 - 32	Unused	disabled	

Port usage for AFF A800 or ASA A800 systems and a Cisco 3132Q-V switch

Cabling an AFF A800 or ASA A800 to a Cisco 3132Q-V switch			
Switch Port	Port use	AFF A800 ASA A800	
		IP_Switch_x_1	IP_Switch_x_2
1	MetroCluster 1, Local Cluster interface	e0a	e1a
2			
3	MetroCluster 2, Local Cluster interface	e0a	e1a
4			
5	MetroCluster 3, Local Cluster interface	e0a	e1a
6			
7	ISL, Local Cluster native speed 40G	ISL, Local Cluster	
8			
9	MetroCluster 1, MetroCluster interface	e0b	e1b
10			
11	MetroCluster 2, MetroCluster interface	e0b	e1b
12			
13	MetroCluster 3, MetroCluster interface	e0b	e1b
14			
15	ISL, MetroCluster native speed 40G	ISL, MetroCluster	
16			
17			
18			
19			
20			
21/1-4	ISL, MetroCluster breakout mode 10G	ISL, MetroCluster	
22/1-4			
23/1-4			
24/1-4			
25 - 32	Unused	disabled	

Platform port assignments for Cisco 3232C or Cisco 9336C switches

The port usage in a MetroCluster IP configuration depends on the switch model and platform type.

Review these considerations before using the tables:

- The following tables show the port usage for site A. The same cabling is used for site B.
- The switches cannot be configured with ports of different speeds (for example, a mix of 100 Gbps ports and 40 Gbps ports).
- If you are configuring a single MetroCluster with the switches, use the **MetroCluster 1** port group.

  Keep track of the MetroCluster port group (MetroCluster 1, MetroCluster 2, MetroCluster 3, or MetroCluster 4). You will need it when using the RcfFileGenerator tool as described later in this configuration procedure.

- The RcfFileGenerator for MetroCluster IP also provides a per-port cabling overview for each switch.

Use this cabling overview to verify your cabling.

- RCF file version v2.10 or later is required for 25G breakout mode for MetroCluster ISLs.
- ONTAP 9.13.1 or later and RCF file version 2.00 are required to use a platform other than FAS8200 or AFF A300 in the "MetroCluster 4" group.

Cabling two MetroCluster configurations to the switches

When cabling more than one MetroCluster configuration to a Cisco 3132Q-V switch, you must cable each MetroCluster according to the appropriate table. For example, if cabling a FAS2750 and an AFF A700 to the same Cisco 3132Q-V switch. Then you cable the FAS2750 as per "MetroCluster 1" in Table 1, and the AFF A700 as per "MetroCluster 2" or "MetroCluster 3" in Table 2. You cannot physically cable both the FAS2750 and the AFF A700 as "MetroCluster 1".

Cabling an AFF A150, ASA A150, FAS2750, AFF A220, FAS500f, AFF C250, ASA C250, AFF A250, or ASA A250 system to a Cisco 3232C or Cisco 9336-FX2C switch

Cabling an AFF A150, ASA A150, FAS2750, AFF A220, FAS500f, AFF C250, ASA C250, AFF A250 or ASA A250 to a Cisco 3232C or Cisco 9336-FX2C switch					
Switch Port	Port use	AFF A150 ASA A150 FAS2750 AFF A220		FAS500f AFF C250 ASA C250 AFF A250 ASA A250	
		IP_Switch_x_1	IP_Switch_x_2	IP_Switch_x_1	IP_Switch_x_2
1 - 6	Unused	disabled		disabled	
7	ISL, Local Cluster native speed / 100G	ISL, Local Cluster		ISL, Local Cluster	
8					
9/1	MetroCluster 1, Shared Cluster and MetroCluster interface	e0a	e0b	e0c	e0d
9/2-4		disabled		disabled	
10/1		e0a	e0b	e0c	e0d
10/2-4		disabled		disabled	
11/1	MetroCluster 2, Shared Cluster and MetroCluster interface	e0a	e0b	e0c	e0d
11/2-4		disabled		disabled	
12/1		e0a	e0b	e0c	e0d
12/2-4		disabled		disabled	
13/1	MetroCluster 3, Shared Cluster and MetroCluster interface	e0a	e0b	e0c	e0d
13/2-4		disabled		disabled	
14/1		e0a	e0b	e0c	e0d
14/2-4		disabled		disabled	
15	ISL, MetroCluster native speed 40G / 100G	ISL, MetroCluster		ISL, MetroCluster	
16					
17					
18					
19					
20					
21/1-4	ISL, MetroCluster breakout mode 10G / 25G	ISL, MetroCluster		ISL, MetroCluster	
22/1-4					
23/1-4					
24/1-4					
25/1	MetroCluster 1, Shared Cluster and MetroCluster interface	e0a	e0b	e0c	e0d
25/2-4		disabled		disabled	
26/1		e0a	e0b	e0c	e0d
26/2-4		disabled		disabled	
27 - 32	Unused	disabled		disabled	
33 - 34	Unused (Cisco 9336C-FX2 only)	disabled		disabled	

Cabling a FAS8200 or an AFF A300 system to a Cisco 3232C or Cisco 9336C switch

Cabling a FAS8200 or AFF A300 to a Cisco 3232C or Cisco 9336C-FX2 switch			
Switch Port	Port use	FAS8200 AFF A300	
		IP_Switch_x_1	IP_Switch_x_2
1/1	MetroCluster 1, Local Cluster interface	e0a	e0b
1/2-4		disabled	
2/1		e0a	e0b
2/2-4		disabled	
3/1	MetroCluster 2, Local Cluster interface	e0a	e0b
3/2-4		disabled	
4/1		e0a	e0b
4/2-4		disabled	
5/1	MetroCluster 3, MetroCluster interface	e0a	e0b
5/2-4		disabled	
6/1		e0a	e0b
6/2-4		disabled	
7	ISL, Local Cluster native speed / 100G	ISL, Local Cluster	
8			
9/1	MetroCluster 1, MetroCluster interface	e1a	e1b
9/2-4		disabled	
10/1		e1a	e1b
10/2-4		disabled	
11/1	MetroCluster 2, MetroCluster interface	e1a	e1b
11/2-4		disabled	
12/1		e1a	e1b
12/2-4		disabled	
13/1	MetroCluster 3, MetroCluster interface	e1a	e1b
13/2-4		disabled	
14/1		e1a	e1b
14/2-4		disabled	
15	ISL, MetroCluster native speed 40G / 100G	ISL, MetroCluster	
16			
17			
18			
19			
20			
21/1-4	ISL, MetroCluster breakout mode 10G / 25G	ISL, MetroCluster	
22/1-4			
23/1-4			
24/1-4			
25/1	MetroCluster 4, MetroCluster interface	e1a	e1b
25/2-4		disabled	
26/1		e1a	e1b
26/2-4		disabled	
27 - 28	Unused	disabled	
29/1	MetroCluster 4, Local Cluster interface	e0a	e0b
29/2-4		disabled	
30/1		e0a	e0b
30/2-4		disabled	
25 - 32	Unused	disabled	
33 - 34	Unused (Cisco 9336C-FX2 only)	disabled	

If you are upgrading from older RCF files, the cabling configuration might be using ports in the "MetroCluster 4" group (ports 25/26 and 29/30).

Cabling an AFF A320, FAS8300, AFF C400, ASA C400, AFF A400, ASA A400, FAS8700, FAS9000, AFF A700, AFF C800, ASA C800, AFF A800, ASA A800, FAS9500, AFF A900, or ASA A900 system to a Cisco 3232C or Cisco 9336C-FX2 switch

Cabling a AFF A320, FAS8300, AFF C400, ASA C400, AFF A400, ASA A400 FAS8700, FAS9000, AFF A700, AFF C800, ASA C800, AFF A800, ASA A800, FAS9500, AFF A900 or ASA A900 to a Cisco 3232C or Cisco 9336C-FX2 switch													
Switch Port	Port use	AFF A320		FAS8300 AFF C400 ASA C400 FAS8700		AFF A400 ASA A400		FAS9000 AFF A700		AFF C800 ASA C800 AFF A800 ASA A800		FAS9500 AFF A900 ASA A900	
		IP_Switch_x_1	IP_Switch_x_2	IP_Switch_x_1	IP_Switch_x_2	IP_Switch_x_1	IP_Switch_x_2	IP_Switch_x_1	IP_Switch_x_2	IP_Switch_x_1	IP_Switch_x_2	IP_Switch_x_1	IP_Switch_x_2
1 2	MetroCluster 1, Local Cluster interface	e0a	e0d	e0c	e0d	e3a	e3b	e4a	e4e / e8a	e0a	e1a	e4a	e4b(e) / e8a Note 1
3 4	MetroCluster 2, Local Cluster interface	e0a	e0d	e0c	e0d	e3a	e3b	e4a	e4e / e8a	e0a	e1a	e4a	e4b(e) / e8a Note 1
5 6	MetroCluster 3, Local Cluster interface	e0a	e0d	e0c	e0d	e3a	e3b	e4a	e4e / e8a	e0a	e1a	e4a	e4b(e) / e8a Note 1
7 8	ISL, Local Cluster native speed / 100G	ISL, Local Cluster		ISL, Local Cluster		ISL, Local Cluster		ISL, Local Cluster		ISL, Local Cluster		ISL, Local Cluster	
9 10	MetroCluster 1, MetroCluster interface	e0g	e0h	e1a	e1b	e1a	e1b	e5a	e5b	e0b	e1b	e5b	e7b
11 12	MetroCluster 2, MetroCluster interface	e0g	e0h	e1a	e1b	e1a	e1b	e5a	e5b	e0b	e1b	e5b	e7b
13 14	MetroCluster 3, MetroCluster interface	e0g	e0h	e1a	e1b	e1a	e1b	e5a	e5b	e0b	e1b	e5b	e7b
15 16 17 18 19 20	ISL, MetroCluster native speed 40G / 100G	ISL, MetroCluster		ISL, MetroCluster		ISL, MetroCluster		ISL, MetroCluster		ISL, MetroCluster		ISL, MetroCluster	
21/1-4 22/1-4 23/1-4 24/1-4	ISL, MetroCluster breakout mode 10G / 25G	ISL, MetroCluster		ISL, MetroCluster		ISL, MetroCluster		ISL, MetroCluster		ISL, MetroCluster		ISL, MetroCluster	
25 26	MetroCluster 4, MetroCluster interface	e0g	e0h	e1a	e1b	e1a	e1b	e5a	e5b	e0b	e1b	e5b	e7b
27 - 28	Unused	disabled		disabled		disabled		disabled		disabled		disabled	
29 30	MetroCluster 4, Local Cluster interface	e0a	e0d	e0c	e0d	e3a	e3b	e4a	e4e / e8a	e0a	e1a	e4a	e4b(e) / e8a Note 1
31 - 32	Unused	disabled		disabled		disabled		disabled		disabled		disabled	
33 - 34	Unused (Cisco 9336C-FX2 only)	disabled		disabled		disabled		disabled		disabled		disabled	

Note 1: If you are using an X91440A adapter (40Gbps), then use either ports e4a and e4e or e4a and e8a. If you are using an X91153A adapter (100Gbps), then use either ports e4a and e4b or e4a and e8a.

Using ports in the "MetroCluster 4" group requires ONTAP 9.13.1 or later.

Platform port assignments for a Cisco 9336C-FX2 shared switch

The port usage in a MetroCluster IP configuration depends on the switch model and platform type.

Review these considerations before using the tables:

- At least one MetroCluster configuration or DR group must support switch attached NS224 shelves.
- Platforms that do not support switch-attached NS224 shelves can only be connected as a second MetroCluster configuration or as a second DR group.
- The RcfFileGenerator only shows eligible platforms when the first platform is selected.
- Connecting one eight-node or two four-node MetroCluster configurations requires ONTAP 9.14.1 or later.

Cabling an AFF A320, AFF C400, ASA C400, AFF A400, ASA A400, AFF A700, AFF C800, ASA C800, AFF A800, AFF A900, or ASA A900 system to a Cisco 9336C-FX2 shared switch

Cabling an AFF A320, AFF C400, ASA C400, AFF A400, ASA A400, AFF A700, AFF C800, ASA C800, AFF A800 , AFF A900, or ASA A900 to a Cisco 9336C-FX2 shared switch													
Switch Port	Port Use	AFF A320		AFF C400 ASA C400		AFF A400 ASA A400		AFF A700		AFF C800 ASA C800 AFF A800		AFF A900 ASA A900	
		IP_Switch_x_1	IP_Switch_x_2	IP_Switch_x_1	IP_Switch_x_2	IP_Switch_x_1	IP_Switch_x_2	IP_Switch_x_1	IP_Switch_x_2	IP_Switch_x_1	IP_Switch_x_2	IP_Switch_x_1	IP_Switch_x_2
1 2	MetroCluster 1, Local Cluster interface	e0a	e0d	e0c	e0d	e3a	e3b	e4a	e4e / e8a	e0a	e1a	e4a	e4b(e) / e8a Note 1
3 4	MetroCluster 2, Local Cluster interface	e0a	e0d	e0c	e0d	e3a	e3b	e4a	e4e / e8a	e0a	e1a	e4a	e4b(e) / e8a Note 1
5	Storage shelf 1 (9)	NSM-1, e0a	NSM-1, e0b	NSM-1, e0a	NSM-1, e0b	NSM-1, e0a	NSM-1, e0b	NSM-1, e0a	NSM-1, e0b	NSM-1, e0a	NSM-1, e0b	NSM-1, e0a	NSM-1, e0b
6		NSM-2, e0a	NSM-2, e0b	NSM-2, e0a	NSM-2, e0b	NSM-2, e0a	NSM-2, e0b	NSM-2, e0a	NSM-2, e0b	NSM-2, e0a	NSM-2, e0b	NSM-2, e0a	NSM-2, e0b
7 8	ISL, Local Cluster native speed / 100G	ISL, Local Cluster		ISL, Local Cluster		ISL, Local Cluster		ISL, Local Cluster		ISL, Local Cluster		ISL, Local Cluster	
9 10	MetroCluster 1, MetroCluster interface	e0g	e0h	e1a	e1b	e1a	e1b	e5a	e5b	e0b	e1b	e5b	e7b
11 12	MetroCluster 2, MetroCluster interface	e0g	e0h	e1a	e1b	e1a	e1b	e5a	e5b	e0b	e1b	e5b	e7b
13 14 15 16	ISL MetroCluster, native speed 40G / 100G breakout mode 10G / 25G	ISL, MetroCluster		ISL, MetroCluster		ISL, MetroCluster		ISL, MetroCluster		ISL, MetroCluster		ISL, MetroCluster	
17 18	MetroCluster 1, Ethernet Storage Interface	e0c	e0f	e4a	e4b / e5b	e0c	e0d / e5b	e3a	e3b / e7b	e5a	e5b / e3b	e3a (option 1) e2a (option 2) e1a (option 3)	e3b (option 1) e10b (option 2) e11b (option 3)
19 20	MetroCluster 2, Ethernet Storage Interface	e0c	e0f	e4a	e4b / e5b	e0c	e0d / e5b	e3a	e3b / e7b	e5a	e5b / e3b	e3a (option 1) e2a (option 2) e1a (option 3)	e3b (option 1) e10b (option 2) e11b (option 3)
21	Storage shelf 2 (8)	NSM-1, e0a	NSM-1, e0b	NSM-1, e0a	NSM-1, e0b	NSM-1, e0a	NSM-1, e0b	NSM-1, e0a	NSM-1, e0b	NSM-1, e0a	NSM-1, e0b	NSM-1, e0a	NSM-1, e0b
22		NSM-2, e0a	NSM-2, e0b	NSM-2, e0a	NSM-2, e0b	NSM-2, e0a	NSM-2, e0b	NSM-2, e0a	NSM-2, e0b	NSM-2, e0a	NSM-2, e0b	NSM-2, e0a	NSM-2, e0b
23	Storage shelf 3 (7)	NSM-1, e0a	NSM-1, e0b	NSM-1, e0a	NSM-1, e0b	NSM-1, e0a	NSM-1, e0b	NSM-1, e0a	NSM-1, e0b	NSM-1, e0a	NSM-1, e0b	NSM-1, e0a	NSM-1, e0b
24		NSM-2, e0a	NSM-2, e0b	NSM-2, e0a	NSM-2, e0b	NSM-2, e0a	NSM-2, e0b	NSM-2, e0a	NSM-2, e0b	NSM-2, e0a	NSM-2, e0b	NSM-2, e0a	NSM-2, e0b
25	Storage shelf 4 (6)	NSM-1, e0a	NSM-1, e0b	NSM-1, e0a	NSM-1, e0b	NSM-1, e0a	NSM-1, e0b	NSM-1, e0a	NSM-1, e0b	NSM-1, e0a	NSM-1, e0b	NSM-1, e0a	NSM-1, e0b
26		NSM-2, e0a	NSM-2, e0b	NSM-2, e0a	NSM-2, e0b	NSM-2, e0a	NSM-2, e0b	NSM-2, e0a	NSM-2, e0b	NSM-2, e0a	NSM-2, e0b	NSM-2, e0a	NSM-2, e0b
27	Storage shelf 5 (5)	NSM-1, e0a	NSM-1, e0b	NSM-1, e0a	NSM-1, e0b	NSM-1, e0a	NSM-1, e0b	NSM-1, e0a	NSM-1, e0b	NSM-1, e0a	NSM-1, e0b	NSM-1, e0a	NSM-1, e0b
28		NSM-2, e0a	NSM-2, e0b	NSM-2, e0a	NSM-2, e0b	NSM-2, e0a	NSM-2, e0b	NSM-2, e0a	NSM-2, e0b	NSM-2, e0a	NSM-2, e0b	NSM-2, e0a	NSM-2, e0b
29	Storage shelf 6 (4)	NSM-1, e0a	NSM-1, e0b	NSM-1, e0a	NSM-1, e0b	NSM-1, e0a	NSM-1, e0b	NSM-1, e0a	NSM-1, e0b	NSM-1, e0a	NSM-1, e0b	NSM-1, e0a	NSM-1, e0b
30		NSM-2, e0a	NSM-2, e0b	NSM-2, e0a	NSM-2, e0b	NSM-2, e0a	NSM-2, e0b	NSM-2, e0a	NSM-2, e0b	NSM-2, e0a	NSM-2, e0b	NSM-2, e0a	NSM-2, e0b
31	Storage shelf 7 (3)	NSM-1, e0a	NSM-1, e0b	NSM-1, e0a	NSM-1, e0b	NSM-1, e0a	NSM-1, e0b	NSM-1, e0a	NSM-1, e0b	NSM-1, e0a	NSM-1, e0b	NSM-1, e0a	NSM-1, e0b
32		NSM-2, e0a	NSM-2, e0b	NSM-2, e0a	NSM-2, e0b	NSM-2, e0a	NSM-2, e0b	NSM-2, e0a	NSM-2, e0b	NSM-2, e0a	NSM-2, e0b	NSM-2, e0a	NSM-2, e0b
33	Storage shelf 8 (2)	NSM-1, e0a	NSM-1, e0b	NSM-1, e0a	NSM-1, e0b	NSM-1, e0a	NSM-1, e0b	NSM-1, e0a	NSM-1, e0b	NSM-1, e0a	NSM-1, e0b	NSM-1, e0a	NSM-1, e0b
34		NSM-2, e0a	NSM-2, e0b	NSM-2, e0a	NSM-2, e0b	NSM-2, e0a	NSM-2, e0b	NSM-2, e0a	NSM-2, e0b	NSM-2, e0a	NSM-2, e0b	NSM-2, e0a	NSM-2, e0b
35	Storage shelf 9 (1)	NSM-1, e0a	NSM-1, e0b	NSM-1, e0a	NSM-1, e0b	NSM-1, e0a	NSM-1, e0b	NSM-1, e0a	NSM-1, e0b	NSM-1, e0a	NSM-1, e0b	NSM-1, e0a	NSM-1, e0b
36		NSM-2, e0a	NSM-2, e0b	NSM-2, e0a	NSM-2, e0b	NSM-2, e0a	NSM-2, e0b	NSM-2, e0a	NSM-2, e0b	NSM-2, e0a	NSM-2, e0b	NSM-2, e0a	NSM-2, e0b

Note 1: If you are using an X91440A adapter (40Gbps), then use either ports e4a and e4e or e4a and e8a. If you are using an X91153A adapter (100Gbps), then use either ports e4a and e4b or e4a and e8a.

Cabling an AFF A150, ASA A150, FAS2750 or AFF A220 system to a Cisco 9336C-FX2 shared switch

Cabling an AFF A150, ASA A150, FAS2750 or AFF A220 to a Cisco 9336C-FX2 shared switch			
Switch Port	Port Use	AFF A150 ASA A150 FAS2750 AFF A220	
		IP_Switch_x_1	IP_Switch_x_2
1 - 6	Unused	disabled	
7	ISL, Local Cluster native speed / 100G	ISL, Local Cluster	
8			
9/1	MetroCluster 1, Shared Cluster and MetroCluster interface	e0a	e0b
9/2-4		disabled	
10/1		e0a	e0b
10/2-4		disabled	
11/1	MetroCluster 2, Shared Cluster and MetroCluster interface	e0a	e0b
11/2-4		disabled	
12/1		e0a	e0b
12/2-4		disabled	
13	ISL MetroCluster, native speed 40G / 100G breakout mode 10G / 25G	ISL, MetroCluster	
14			
15			
16			
17-36	Unused	disabled	

Cabling a FAS500f, AFF C250, ASA C250, AFF A250, or ASA A250 system to a Cisco 9336C-FX2 shared switch

Cabling a FAS500f, AFF C250, ASA C250, AFF A250, ASA A250 to a Cisco 9336C-FX2 shared switch			
Switch Port	Port Use	FAS500f AFF C250 ASA C250 AFF A250 ASA A250	
		IP_Switch_x_1	IP_Switch_x_2
1 - 6	Unused	disabled	
7	ISL, Local Cluster native speed / 100G	ISL, Local Cluster	
8			
9/1	MetroCluster 1, Shared Cluster and MetroCluster interface	e0c	e0d
9/2-4		disabled	
10/1		e0c	e0d
10/2-4		disabled	
11/1	MetroCluster 2, Shared Cluster and MetroCluster interface	e0c	e0d
11/2-4		disabled	
12/1		e0c	e0d
12/2-4		disabled	
13	ISL MetroCluster, native speed 40G / 100G breakout mode 10G / 25G	ISL, MetroCluster	
14			
15			
16			
17-36	Unused	disabled	

Cabling a FAS8200 or AFF A300 system to a Cisco 9336C-FX2 shared switch

Cabling a FAS8200 or AFF A300 to a Cisco 9336C-FX2 shared switch			
Switch Port	Port Use	FAS8200 AFF A300	
		IP_Switch_x_1	IP_Switch_x_2
1/1	MetroCluster 1, Local Cluster interface	e0a	e0b
1/2-4		disabled	
2/1		e0a	e0b
2/2-4		disabled	
3/1	MetroCluster 2, Local Cluster interface	e0a	e0b
3/2-4		disabled	
4/1		e0a	e0b
4/2-4		disabled	
5-6	Unused	disabled	
7	ISL, Local Cluster native speed / 100G	ISL, Local Cluster	
8			
9/1	MetroCluster 1, MetroCluster interface	e1a	e1b
9/2-4		disabled	
10/1		e1a	e1b
10/2-4		disabled	
11/1	MetroCluster 2, MetroCluster interface	e1a	e1b
11/2-4		disabled	
12/1		e1a	e1b
12/2-4		disabled	
13	ISL MetroCluster, native speed 40G / 100G breakout mode 10G / 25G	ISL, MetroCluster	
14			
15			
16			
17-36	Unused	disabled	

Cabling a FAS8300, FAS8700, FAS9000, or FAS9500 system to a Cisco 9336C-FX2 shared switch

Cabling a FAS8300, FAS8700, FAS9000, or FAS9500 to a Cisco 9336C-FX2 shared switch							
Switch Port	Port Use	FAS8300 FAS8700		FAS9000		FAS9500	
		IP_Switch_x_1	IP_Switch_x_2	IP_Switch_x_1	IP_Switch_x_2	IP_Switch_x_1	IP_Switch_x_2
1	MetroCluster 1, Local Cluster interface	e0c	e0d	e4a	e4e / e8a	e4a	e4b(e) / e8a Note 1
2							
3	MetroCluster 2, Local Cluster interface	e0c	e0d	e4a	e4e / e8a	e4a	e4b(e) / e8a Note 1
4							
5-6	Unused	disabled		disabled		disabled	
7	ISL, Local Cluster native speed / 100G	ISL, Local Cluster		ISL, Local Cluster		ISL, Local Cluster	
8							
9	MetroCluster 1, MetroCluster interface	e1a	e1b	e5a	e5b	e5b	e7b
10							
11	MetroCluster 2, MetroCluster interface	e1a	e1b	e5a	e5b	e5b	e7b
12							
13	ISL MetroCluster, native speed 40G / 100G breakout mode 10G / 25G	ISL, MetroCluster		ISL, MetroCluster		ISL, MetroCluster	
14							
15							
16							
17-36	Unused	disabled		disabled		disabled	

Note 1: If you are using an X91440A adapter (40Gbps), then use either ports e4a and e4e or e4a and e8a. If you are using an X91153A adapter (100Gbps), then use either ports e4a and e4b or e4a and e8a.

Platform port assignments for Broadcom supported BES-53248 IP switches

The port usage in a MetroCluster IP configuration depends on the switch model and platform type.

The switches cannot be used with remote ISL ports of different speeds (for example, a 25 Gbps port connected to a 10 Gbps ISL port).

Review this information before using the tables:

- If you configure the switch for MetroCluster FC to IP Transition, the following ports are used depending on the target platform that you choose:

Target platform	Port
FAS500f, AFF C250, ASA C250, AFF A250, ASA A250, FAS8300, AFF C400, ASA C400, AFF A400, ASA A400, or FAS8700 platforms	ports 1 - 6, 10Gbps
FAS8200 or AFF A300 platforms	ports 3 - 4 and 9 - 12, 10Gbps

- AFF A320 systems configured with Broadcom BES-53248 switches might not support all features.

  Any configuration or feature that requires that the local cluster connections are connected to a switch is not supported. For example, the following configurations and procedures are not supported:

  - Eight-node MetroCluster configurations
  - Transitioning from MetroCluster FC to MetroCluster IP configurations
  - Refreshing a four-node MetroCluster IP configuration (ONTAP 9.8 and later)

Notes referenced in the tables:

- **Note 1**: Using these ports requires an additional license.
- **Note 2**: Only a single four-node MetroCluster using AFF A320 systems can be connected to the switch.

Features that require a switched cluster are not supported in this configuration, including the MetroCluster FC to IP transition and tech refresh procedures.

- **Note 3**: The BES-53248 switch requires all ports in a four-port group to operate at the same speed. To connect a mix of AFF 150, ASA A150, FAS2750, AFF A220 and FAS500f, AFF C250, ASA C250, AFF A250, and ASA A250 platforms, switch ports that are located in separate four-port groups must be used. If you require this type of configuration, the following applies:
  - In the RcfFileGenerator for MetroCluster IP, drop-down fields for "MetroCluster 1" and "MetroCluster 2" are only populated after you select a platform for MetroCluster 3 or "MetroCluster 4". Refer to Using the port tables with the RcfFileGenerator tool or multiple MetroCluster configurations for more information on how to use the port tables.
  - If both MetroCluster configurations are using the same the platform, NetApp recommends that you select the group "MetroCluster 3" for one configuration and the group "MetroCluster 4" for the other configuration. If the platforms are different, then you must select "MetroCluster 3" or "MetroCluster 4" for the first configuration, and select "MetroCluster 1" or "MetroCluster 2" for the second configuration.

Cabling an AFF A150, ASA A150, FAS2750, AFF A220, FAS500f, AFF C250, ASA C250, AFF A250 or ASA A250 to a Broadcom BES-53248 switch

Cabling an AFF A150, ASA A150, FAS2750, AFF A220, FAS500f, AFF C250, ASA C250, AFF A250 or ASA A250 to a Broadcom BES-53248 switch					
Physical Port	Port use	AFF A150 ASA A150 FAS2750 AFF A220		FAS500f AFF C250 ASA C250 AFF A250 ASA A250	
		IP_Switch_x_1	IP_Switch_x_2	IP_Switch_x_1	IP_Switch_x_2
1 - 4	Unused	disabled		disabled	
5	MetroCluster 1, Shared Cluster and MetroCluster interface (note 3)	e0a	e0b	e0c	e0d
6					
7	MetroCluster 2, Shared Cluster and MetroCluster interface (note 3)	e0a	e0b	e0c	e0d
8					
9	MetroCluster 3, Shared Cluster and MetroCluster interface (note 3)	e0a	e0b	e0c	e0d
10					
11	MetroCluster 4, Shared Cluster and MetroCluster interface (note 3)	e0a	e0b	e0c	e0d
12					
13	ISL, MetroCluster native speed 10G / 25G	ISL, MetroCluster		ISL, MetroCluster	
14					
15					
16					
..	Ports not licensed (17 - 54)				
53	ISL, MetroCluster, native speed 40G / 100G (note 1)	ISL, MetroCluster		ISL, MetroCluster	
54					
55	ISL, Local Cluster native speed / 100G	ISL, Local Cluster		ISL, Local Cluster	
56					

Cabling a FAS8200, AFF A300, or AFF A320 system to a Broadcom BES-53248 switch

Cabling a FAS8200 or AFF A300 to a Broadcom BES-53248 switch			
Physical Port	Port use	FAS8200 AFF A300	
		IP_Switch_x_1	IP_Switch_x_2
1	MetroCluster 1, Local Cluster interface	e0a	e0b
2			
3	MetroCluster 2, Local Cluster interface Not used during Transition	e0a	e0b
4			
5	MetroCluster 1, MetroCluster interface	e1a	e1b
6			
7	MetroCluster 2, MetroCluster interface	e1a	e1b
8			
9 - 12	Unused	disabled	
13	ISL, MetroCluster native speed 10G / 25G	ISL, MetroCluster	
14			
15			
16			
..	Ports not licensed (17 - 54)		
53	ISL, MetroCluster, native speed 40G / 100G (note 1)	ISL, MetroCluster	
54			
55	ISL, Local Cluster native speed / 100G	ISL, Local Cluster	
56			

Cabling an AFF A320 to a Broadcom BES-53248 switch			
		AFF A320	
Physical Port	Port use	IP_Switch_x_1	IP_Switch_x_2
1 - 12	Ports not used (note 2)	disabled	
13	ISL, MetroCluster native speed 10G / 25G	ISL, MetroCluster	
14			
15			
16			
..	Ports not licensed (17 - 54)		
53	ISL, MetroCluster, native speed 40G / 100G (see note 1)	ISL, MetroCluster	
54			
55	MetroCluster 1, MetroCluster interface (note 2)	e0g	e0h
56			

Cabling a FAS8300, AFF C400, ASA C400, AFF A400, ASA A400 or FAS8700 system to a Broadcom BES-53248 switch

Cabling a FAS8300, AFF C400, ASA C400, AFF A400, ASA A400 or FAS8700 to a Broadcom BES-53248 switch					
Physical Port	Port use	FAS8300 AFF C400 ASA C400 FAS8700		AFF A400 ASA A400	
		IP_Switch_x_1	IP_Switch_x_2	IP_Switch_x_1	IP_Switch_x_2
1 - 12	Ports not used (see note 2)	disabled		disabled	
13	ISL, MetroCluster native speed 10G / 25G	ISL, MetroCluster		ISL, MetroCluster	
14					
15					
16					
..	Ports not licensed (17 - 48)				
49	MetroCluster 5, Local Cluster interface (note 1)	e0c	e0d	e3a	e3b
50					
51	MetroCluster 5, MetroCluster interface (note 1)	e1a	e1b	e1a	e1b
52					
53	ISL, MetroCluster, native speed 40G / 100G (note 1)	ISL, MetroCluster		ISL, MetroCluster	
54					
55	ISL, Local Cluster native speed / 100G	ISL, Local Cluster		ISL, Local Cluster	
56					

Platform port assignments for NVIDIA supported SN2100 IP switches

The port usage in a MetroCluster IP configuration depends on the switch model and platform type.

Supported configurations

The following configurations are not currently supported:

- MetroCluster FC-to-IP Transition

Review these considerations before using the configuration tables

- Connecting an eight-node or two four-node MetroCluster configurations requires ONTAP 9.14.1 or later and RCF file version 2.00 or later.
- If you cable multiple MetroCluster configurations then follow the respective table. For example:
  - If you cable two four-node MetroCluster configurations of type AFF A700, then connect the first MetroCluster shown as "MetroCluster 1", and the second MetroCluster shown as "MetroCluster 2" in the AFF A700 table.

> Ports 13 and 14 can be used in native speed mode supporting 40 Gbps and 100 Gbps, or in breakout mode to support 4 × 25 Gbps or 4 × 10 Gbps. If they use native speed mode they are represented as ports 13 and 14. If they use breakout mode, either 4 × 25 Gbps or 4 × 10 Gbps, then they are represented as ports 13s0-3 and 14s0-3.

The following sections describe the physical cabling outline. You can also refer to the RcfFileGenerator for detailed cabling information.

Cabling an AFF A150, ASA A150, FAS500f, AFF C250, ASA C250, AFF A250 or ASA A250 system to a NVIDIA SN2100 switch

Cabling a AFF A150, ASA A150, FAS500f, AFF C250, ASA C250, AFF A250 or ASA A250 to a NVIDIA SN2100 switch					
Switch Port	Port use	AFF A150 ASA A150		FAS500F AFF C250 ASA C250 AFF A250 ASA A250	
		IP_Switch_x_1	IP_Switch_x_2	IP_Switch_x_1	IP_Switch_x_2
1 - 6	Unused	disabled		disabled	
7s0	MetroCluster 1, Shared Cluster and MetroCluster interface	e0c	e0d	e0c	e0d
7s1-3		disabled		disabled	
8s0		e0c	e0d	e0c	e0d
8s1-3		disabled		disabled	
9s0	MetroCluster 2, Shared Cluster and MetroCluster interface	e0c	e0d	e0c	e0d
9s1-3		disabled		disabled	
10s0		e0c	e0d	e0c	e0d
10s1-3		disabled		disabled	
11s0	MetroCluster 3, Shared Cluster and MetroCluster interface	e0c	e0d	e0c	e0d
11s1-3		disabled		disabled	
12s0		e0c	e0d	e0c	e0d
12s1-3		disabled		disabled	
13 / 13s0-3	MetroCluster ISL 40/100G or 4x25G or 4x10G	ISL, MetroCluster		ISL, MetroCluster	
14 / 14s0-3					
15	ISL, Local Cluster 100G	ISL, Local Cluster		ISL, Local Cluster	
16					

Cabling a FAS8300, AFF C400, ASA C400, AFF A400, ASA A400, FAS8700, FAS9000, AFF A700, AFF C800, ASA C800, AFF A800, ASA A800, FAS9500, AFF A900, or ASA A900 system to a NVIDIA SN2100 switch

Cabling a FAS8300, AFF C400, ASA C400, AFF A400, ASA A400, FAS8700, FAS9000, AFF A700, AFF C800, ASA C800, AFF A800, ASA A800, FAS9500, AFF A900 or ASA A900 to a NVIDIA SN2100 switch											
Switch Port	Port use	FAS8300 AFF C400 ASA C400 FAS8700		AFF A400 ASA A400		FAS9000 AFF A700		AFF C800 ASA C800 AFF A800 ASA A800		FAS9500 AFF A900 ASA A900	
		IP_Switch_x_1	IP_Switch_x_2	IP_Switch_x_1	IP_Switch_x_2	IP_Switch_x_1	IP_Switch_x_2	IP_Switch_x_1	IP_Switch_x_2	IP_Switch_x_1	IP_Switch_x_2
1	MetroCluster 1, Local Cluster interface	e0c	e0d	e3a	e3b	e4a	e4e / e8a	e0a	e1a	e4a	e4b(e) / e8a Note 1
2											
3	MetroCluster 2, Local Cluster interface	e0c	e0d	e3a	e3b	e4a	e4e / e8a	e0a	e1a	e4a	e4b(e) / e8a Note 1
4											
5	MetroCluster 3, Local Cluster interface	e0c	e0d	e3a	e3b	e4a	e4e / e8a	e0a	e1a	e4a	e4b(e) / e8a Note 1
6											
7	MetroCluster 1, MetroCluster interface	e1a	e1b	e1a	e1b	e5a	e5b	e0b	e1b	e5b	e7b
8											
9	MetroCluster 2, MetroCluster interface	e1a	e1b	e1a	e1b	e5a	e5b	e0b	e1b	e5b	e7b
10											
11	MetroCluster 3, MetroCluster interface	e1a	e1b	e1a	e1b	e5a	e5b	e0b	e1b	e5b	e7b
12											
13 / 13s0-3	MetroCluster ISL 40/100G or 4x25G or 4x10G	ISL, MetroCluster		ISL, MetroCluster		ISL, MetroCluster		ISL, MetroCluster		ISL, MetroCluster	
14 / 14s0-3											
15	ISL, Local Cluster 100G	ISL, Local Cluster		ISL, Local Cluster		ISL, Local Cluster		ISL, Local Cluster		ISL, Local Cluster	
16											

Note 1: If you are using an X91440A adapter (40Gbps), then use either ports e4a and e4e or e4a and e8a. If you are using an X91153A adapter (100Gbps), then use either ports e4a and e4b or e4a and e8a.

Cabling the controller peering, data, and management ports

You must cable the controller module ports used for cluster peering, management and data connectivity.

This task must be performed on each controller module in the MetroCluster configuration.

At least two ports on each controller module should be used for cluster peering.

The recommended minimum bandwidth for the ports and network connectivity is 1 GbE.

1. Identify and cable at least two ports for cluster peering and verify they have network connectivity with the partner cluster.

   Cluster peering can be done on dedicated ports or on data ports. Using dedicated ports provides higher throughput for the cluster peering traffic.

   Cluster and SVM peering express configuration

2. Cable the controller's management and data ports to the management and data networks at the local site.

   Use the installation instructions for your platform at the ONTAP Hardware Systems Documentation.

   > MetroCluster IP systems do not have dedicated high-availability (HA) ports. When using *ONTAP Hardware Systems Documentation* to install your platform, you should not follow the instructions to cable the cluster and HA ports.

Configure the MetroCluster IP switches

Configuring Broadcom IP switches

You must configure the Broadcom IP switches for use as the cluster interconnect and for backend MetroCluster IP connectivity.

> Your configuration requires additional licenses (6 x 100-Gb port license) in the following scenarios:

- You use ports 53 and 54 as a 40-Gbps or 100-Gbps MetroCluster ISL.
- You use a platform that connects the local cluster and MetroCluster interfaces to ports 49 - 52.

Resetting the Broadcom IP switch to factory defaults

Before installing a new switch software version and RCFs, you must erase the Broadcom switch settings and perform basic configuration.

About this task

- You must repeat these steps on each of the IP switches in the MetroCluster IP configuration.
- You must be connected to the switch using the serial console.
- This task resets the configuration of the management network.

Steps

1. Change to the elevated command prompt (#): `enable`

```
(IP_switch_A_1)> enable
(IP_switch_A_1) #
```

2. Erase the startup configuration and remove the banner
   a. Erase the startup configuration:

      `erase startup-config`

      ```
      (IP_switch_A_1) #erase startup-config

      Are you sure you want to clear the configuration? (y/n) y

      (IP_switch_A_1) #
      ```

      This command does not erase the banner.

   b. Remove the banner:

      `no set clibanner`

      ```
      (IP_switch_A_1) #configure
      (IP_switch_A_1)(Config) # no set clibanner
      (IP_switch_A_1)(Config) #
      ```

3. Reboot the switch: **`(IP_switch_A_1) #reload`**

   ```
   Are you sure you would like to reset the system? (y/n) y
   ```

   > If the system asks whether to save the unsaved or changed configuration before reloading the switch, select **No**.

4. Wait for the switch to reload, and then log in to the switch.

   The default user is “admin”, and no password is set. A prompt similar to the following is displayed:

   ```
   (Routing)>
   ```

5. Change to the elevated command prompt:

   `enable`

   ```
   Routing)> enable
   (Routing) #
   ```

6. Set the service port protocol to `none`:

```
serviceport protocol none
```

```
(Routing) #serviceport protocol none
Changing protocol mode will reset ip configuration.
Are you sure you want to continue? (y/n) y

(Routing) #
```

7. Assign the IP address to the service port:

   ```
   serviceport ip ip-address netmask gateway
   ```

   The following example shows a service port assigned IP address "10.10.10.10" with subnet "255.255.255.0" and gateway "10.10.10.1":

   ```
   (Routing) #serviceport ip 10.10.10.10 255.255.255.0 10.10.10.1
   ```

8. Verify that the service port is correctly configured:

   ```
   show serviceport
   ```

   The following example shows that the port is up and the correct addresses have been assigned:

   ```
   (Routing) #show serviceport

   Interface Status............................... Up
   IP Address..................................... 10.10.10.10
   Subnet Mask.................................... 255.255.255.0
   Default Gateway................................ 10.10.10.1
   IPv6 Administrative Mode....................... Enabled
   IPv6 Prefix is ................................
   fe80::dac4:97ff:fe56:87d7/64
   IPv6 Default Router............................ fe80::222:bdff:fef8:19ff
   Configured IPv4 Protocol....................... None
   Configured IPv6 Protocol....................... None
   IPv6 AutoConfig Mode........................... Disabled
   Burned In MAC Address.......................... D8:C4:97:56:87:D7

   (Routing) #
   ```

9. If desired, configure the SSH server.

   > The RCF file disables the Telnet protocol. If you do not configure the SSH server, you can only access the bridge using the serial port connection.

a. Generate RSA keys.

```
(Routing) #configure
(Routing) (Config)#crypto key generate rsa
```

b. Generate DSA keys (optional)

```
(Routing) #configure
(Routing) (Config)#crypto key generate dsa
```

c. If you are using the FIPS compliant version of EFOS, generate the ECDSA keys. The following example creates the keys with a length of 256. Valid values are 256, 384 or 521.

```
(Routing) #configure
(Routing) (Config)#crypto key generate ecdsa 256
```

d. Enable the SSH server.

If necessary, exit the configuration context.

```
(Routing) (Config)#end
(Routing) #ip ssh server enable
```

> If keys already exist, then you might be asked to overwrite them.

10. If desired, configure the domain and name server:

`configure`

The following example shows the `ip domain` and `ip name server` commands:

```
(Routing) # configure
(Routing) (Config)#ip domain name lab.netapp.com
(Routing) (Config)#ip name server 10.99.99.1 10.99.99.2
(Routing) (Config)#exit
(Routing) (Config)#
```

11. If desired, configure the time zone and time synchronization (SNTP).

The following example shows the `sntp` commands, specifying the IP address of the SNTP server and the relative time zone.

```
(Routing) #
(Routing) (Config)#sntp client mode unicast
(Routing) (Config)#sntp server 10.99.99.5
(Routing) (Config)#clock timezone -7
(Routing) (Config)#exit
(Routing) (Config)#
```

For EFOS version 3.10.0.3 and later, use the `ntp` command, as shown in the following example:

```
> (Config)# ntp ?

authenticate             Enables NTP authentication.
authentication-key       Configure NTP authentication key.
broadcast                Enables NTP broadcast mode.
broadcastdelay           Configure NTP broadcast delay in microseconds.
server                   Configure NTP server.
source-interface         Configure the NTP source-interface.
trusted-key              Configure NTP authentication key number for
trusted time source.
vrf                      Configure the NTP VRF.

>(Config)# ntp server ?

ip-address|ipv6-address|hostname  Enter a valid IPv4/IPv6 address or
hostname.

>(Config)# ntp server 10.99.99.5
```

12. Configure the switch name:

    `hostname IP_switch_A_1`

    The switch prompt will display the new name:

    ```
    (Routing) # hostname IP_switch_A_1

    (IP_switch_A_1) #
    ```

13. Save the configuration:

    `write memory`

    You receive prompts and output similar to the following example:

```
(IP_switch_A_1) #write memory

This operation may take a few minutes.
Management interfaces will not be available during this time.

Are you sure you want to save? (y/n) y

Config file 'startup-config' created successfully .


Configuration Saved!

(IP_switch_A_1) #
```

14. Repeat the previous steps on the other three switches in the MetroCluster IP configuration.

Downloading and installing the Broadcom switch EFOS software

You must download the switch operating system file and RCF file to each switch in the MetroCluster IP configuration.

About this task

This task must be repeated on each switch in the MetroCluster IP configuration.

Note the following:

- When upgrading from EFOS 3.4.x.x to EFOS 3.7.x.x or later, the switch must be running EFOS 3.4.4.6 (or later 3.4.x.x release). If you are running a release prior to that, then upgrade the switch to EFOS 3.4.4.6 (or later 3.4.x.x release) first, then upgrade the switch to EFOS 3.7.x.x or later.
- The configuration for EFOS 3.4.x.x and 3.7.x.x or later are different. Changing the EFOS version from 3.4.x.x to 3.7.x.x or later, or vice versa, requires the switch to be reset to factory defaults and the RCF files for the corresponding EFOS version to be (re)applied. This procedure requires access through the serial console port.
- Beginning with EFOS version 3.7.x.x or later, a non-FIPS compliant and a FIPS compliant version is available. Different steps apply when moving to from a non-FIPS compliant to a FIPS compliant version or vice versa. Changing EFOS from a non-FIPS compliant to a FIPS compliant version or vice versa will reset the switch to factory defaults. This procedure requires access through the serial console port.

Steps

1. Check if your version of EFOS is FIPS compliant or non-FIPS compliant by using the `show fips status` command. In the following examples, `IP_switch_A_1` is using FIPS compliant EFOS and `IP_switch_A_2` is using non-FIPS compliant EFOS.

   Example 1

```
IP_switch_A_1 #show fips status

System running in FIPS mode

IP_switch_A_1 #
```

Example 2

```
IP_switch_A_2 #show fips status
                     ^
% Invalid input detected at `^` marker.

IP_switch_A_2 #
```

2. Use the following table to determine which method you must follow:

Procedure	Current EFOS version	New EFOS version	High level steps
Steps to upgrade EFOS between two (non) FIPS compliant versions	3.4.x.x	3.4.x.x	Install the new EFOS image using method 1) The configuration and license information is retained
	3.4.4.6 (or later 3.4.x.x)	3.7.x.x or later non-FIPS compliant	Upgrade EFOS using method 1. Reset the switch to factory defaults and apply the RCF file for EFOS 3.7.x.x or later
	3.7.x.x or later non-FIPS compliant	3.4.4.6 (or later 3.4.x.x)	Downgrade EFOS using method 1. Reset the switch to factory defaults and apply the RCF file for EFOS 3.4.x.x
		3.7.x.x or later non-FIPS compliant	Install the new EFOS image using method 1. The configuration and license information is retained
	3.7.x.x or later FIPS compliant	3.7.x.x or later FIPS compliant	Install the new EFOS image using method 1. The configuration and license information is retained

Steps to upgrade to/from a FIPS compliant EFOS version	Non-FIPS compliant	FIPS compliant	Installation of the EFOS image using method 2. The switch configuration and license information will be lost.
	FIPS compliant	Non-FIPS compliant	

- Method 1: Steps to upgrade EFOS with downloading the software image to the backup boot partition
- Method 2: Steps to upgrade EFOS using the ONIE OS installation

Steps to upgrade EFOS with downloading the software image to the backup boot partition

You can perform the following steps only if both EFOS versions are non-FIPS compliant or both EFOS versions are FIPS compliant.

> Do not use these steps if one version is FIPS compliant and the other version is non-FIPS compliant.

Steps

1. Copy the switch software to the switch: `copy sftp://user@50.50.50.50/switchsoftware/efos-3.4.4.6.stk backup`

   In this example, the efos-3.4.4.6.stk operating system file is copied from the SFTP server at 50.50.50.50 to the backup partition. You need to use the IP address of your TFTP/SFTP server and the file name of the RCF file that you need to install.

```
(IP_switch_A_1) #copy sftp://user@50.50.50.50/switchsoftware/efos-
3.4.4.6.stk backup
Remote Password:*************

Mode........................................... SFTP
Set Server IP.................................. 50.50.50.50
Path........................................... /switchsoftware/
Filename....................................... efos-3.4.4.6.stk
Data Type...................................... Code
Destination Filename........................... backup

Management access will be blocked for the duration of the transfer
Are you sure you want to start? (y/n) y

File transfer in progress. Management access will be blocked for the
duration of the transfer. Please wait...
SFTP Code transfer starting...


File transfer operation completed successfully.

(IP_switch_A_1) #
```

2. Set the switch to boot from the backup partition on the next switch reboot:

   `boot system backup`

```
(IP_switch_A_1) #boot system backup
Activating image backup ..

(IP_switch_A_1) #
```

3. Verify that the new boot image will be active on the next boot:

   `show bootvar`

```
(IP_switch_A_1) #show bootvar

Image Descriptions

 active :
 backup :


 Images currently available on Flash

 ----  -----------  --------  ---------------  ------------
 unit       active    backup   current-active   next-active
 ----  -----------  --------  ---------------  ------------

    1       3.4.4.2    3.4.4.6      3.4.4.2        3.4.4.6

(IP_switch_A_1) #
```

4. Save the configuration:

   `write memory`

```
(IP_switch_A_1) #write memory

This operation may take a few minutes.
Management interfaces will not be available during this time.

Are you sure you want to save? (y/n) y


Configuration Saved!

(IP_switch_A_1) #
```

5. Reboot the switch:

   `reload`

```
(IP_switch_A_1) #reload

Are you sure you would like to reset the system? (y/n) y
```

6. Wait for the switch to reboot.

> In rare scenarios the switch may fail to boot. Follow the Steps to upgrade EFOS using the ONIE OS installation to install the new image.

7. If you change the switch from EFOS 3.4.x.x to EFOS 3.7.x.x or vice versa then follow the following two procedures to apply the correct configuration (RCF):
   a. Resetting the Broadcom IP switch to factory defaults
   b. Downloading and installing the Broadcom RCF files
8. Repeat these steps on the remaining three IP switches in the MetroCluster IP configuration.

Steps to upgrade EFOS using the ONIE OS installation

You can perform the following steps if one EFOS version is FIPS compliant and the other EFOS version is non-FIPS compliant. These steps can be used to install the non-FIPS or FIPS compliant EFOS 3.7.x.x image from ONIE if the switch fails to boot.

Steps

1. Boot the switch into ONIE installation mode.

   During boot, select ONIE when the following screen appears:

```
+--------------------------------------------------------------------+
|EFOS                                                                |
|*ONIE                                                               |
|                                                                    |
|                                                                    |
|                                                                    |
|                                                                    |
|                                                                    |
|                                                                    |
|                                                                    |
|                                                                    |
|                                                                    |
|                                                                    |
+--------------------------------------------------------------------+
```

   After selecting "ONIE", the switch will then load and present you with the following choices:

```
 +-----------------------------------------------------------------+
 |*ONIE: Install OS                                                |
 | ONIE: Rescue                                                    |
 | ONIE: Uninstall OS                                              |
 | ONIE: Update ONIE                                               |
 | ONIE: Embed ONIE                                                |
 | DIAG: Diagnostic Mode                                           |
 | DIAG: Burn-In Mode                                              |
 |                                                                 |
 |                                                                 |
 |                                                                 |
 |                                                                 |
 |                                                                 |
 +-----------------------------------------------------------------+
```

The switch now will boot into ONIE installation mode.

2. Stop the ONIE discovery and configure the ethernet interface

   Once the following message appears press <enter> to invoke the ONIE console:

```
 Please press Enter to activate this console. Info: eth0:  Checking
link... up.
 ONIE:/ #
```

> The ONIE discovery will continue and messages will be printed to the console.

```
Stop the ONIE discovery
ONIE:/ # onie-discovery-stop
discover: installer mode detected.
Stopping: discover... done.
ONIE:/ #
```

3. Configure the ethernet interface and add the route using `ifconfig eth0 <ipAddress> netmask <netmask> up` and `route add default gw <gatewayAddress>`

```
ONIE:/ # ifconfig eth0 10.10.10.10 netmask 255.255.255.0 up
ONIE:/ # route add default gw 10.10.10.1
```

4. Verify that the server hosting the ONIE installation file is reachable:

```
ONIE:/ # ping 50.50.50.50
PING 50.50.50.50 (50.50.50.50): 56 data bytes
64 bytes from 50.50.50.50: seq=0 ttl=255 time=0.429 ms
64 bytes from 50.50.50.50: seq=1 ttl=255 time=0.595 ms
64 bytes from 50.50.50.50: seq=2 ttl=255 time=0.369 ms
^C
--- 50.50.50.50 ping statistics ---
3 packets transmitted, 3 packets received, 0% packet loss
round-trip min/avg/max = 0.369/0.464/0.595 ms
ONIE:/ #
```

5. Install the new switch software

```
ONIE:/ # onie-nos-install http:// 50.50.50.50/Software/onie-installer-
x86_64
discover: installer mode detected.
Stopping: discover... done.
Info: Fetching http:// 50.50.50.50/Software/onie-installer-3.7.0.4 ...
Connecting to 50.50.50.50 (50.50.50.50:80)
installer            100% |*******************************| 48841k
0:00:00 ETA
ONIE: Executing installer: http:// 50.50.50.50/Software/onie-installer-
3.7.0.4
Verifying image checksum ... OK.
Preparing image archive ... OK.
```

The software will install and then reboot the switch. Let the switch reboot normally into the new EFOS version.

6. Verify that the new switch software is installed

show bootvar

```
(Routing) #show bootvar
Image Descriptions
active :
backup :
Images currently available on Flash
----    ----------- -------- --------------- ------------
unit    active     backup   current-active  next-active
----    ----------- -------- --------------- ------------
1   3.7.0.4     3.7.0.4  3.7.0.4         3.7.0.4
(Routing) #
```

7. Complete the installation

   The switch will reboot with no configuration applied and reset to factory defaults. Follow the two procedures to configure the switch basic settings and apply the RCF file as outlined in the following two documents:

   a. Configure the switch basic settings. Follow step 4 and later: Resetting the Broadcom IP switch to factory defaults
   b. Create and apply the RCF file as outlined in Downloading and installing the Broadcom RCF files

Downloading and installing the Broadcom RCF files

You must download and install the switch RCF file to each switch in the MetroCluster IP configuration.

Before you begin

This task requires file transfer software, such as FTP, TFTP, SFTP, or SCP, to copy the files to the switches.

About this task

These steps must be repeated on each of the IP switches in the MetroCluster IP configuration.

There are four RCF files, one for each of the four switches in the MetroCluster IP configuration. You must use the correct RCF files for the switch model you are using.

Switch	RCF file
IP_switch_A_1	v1.32_Switch-A1.txt
IP_switch_A_2	v1.32_Switch-A2.txt
IP_switch_B_1	v1.32_Switch-B1.txt
IP_switch_B_2	v1.32_Switch-B2.txt

> The RCF files for EFOS version 3.4.4.6 or later 3.4.x.x. release and EFOS version 3.7.0.4 are different. You need to make sure that you have created the correct RCF files for the EFOS version that the switch is running.

EFOS version	RCF file version
3.4.x.x	v1.3x, v1.4x
3.7.x.x	v2.x

Steps

1. Generate the Broadcom RCF files for MetroCluster IP.
   a. Download the RcfFileGenerator for MetroCluster IP
   b. Generate the RCF file for your configuration using the RcfFileGenerator for MetroCluster IP.

      > Modifications to the RCF files after download are not supported.

2. Copy the RCF files to the switches:

a. Copy the RCF files to the first switch: `copy sftp://user@FTP-server-IP-address/RcfFiles/switch-specific-RCF/BES-53248_v1.32_Switch-A1.txt nvram:script BES-53248_v1.32_Switch-A1.scr`

   In this example, the "BES-53248_v1.32_Switch-A1.txt" RCF file is copied from the SFTP server at "50.50.50.50" to the local bootflash. You need to use the IP address of your TFTP/SFTP server and the file name of the RCF file that you need to install.

```
(IP_switch_A_1) #copy sftp://user@50.50.50.50/RcfFiles/BES-
53248_v1.32_Switch-A1.txt nvram:script BES-53248_v1.32_Switch-A1.scr

Remote Password:*************

Mode............................................ SFTP
Set Server IP................................... 50.50.50.50
Path............................................ /RcfFiles/
Filename........................................ BES-
53248_v1.32_Switch-A1.txt
Data Type....................................... Config Script
Destination Filename........................... BES-
53248_v1.32_Switch-A1.scr

Management access will be blocked for the duration of the transfer
Are you sure you want to start? (y/n) y

File transfer in progress. Management access will be blocked for the
duration of the transfer. Please wait...
File transfer operation completed successfully.


Validating configuration script...

config

set clibanner
"*******************************************************************
*******

* NetApp Reference Configuration File (RCF)

*

* Switch    : BES-53248



...
The downloaded RCF is validated. Some output is being logged here.
...


Configuration script validated.
File transfer operation completed successfully.

(IP_switch_A_1) #
```

b. Verify that the RCF file is saved as a script:

```
script list
```

```
(IP_switch_A_1) #script list

Configuration Script Name        Size(Bytes)  Date of Modification
-------------------------------  -----------  --------------------
BES-53248_v1.32_Switch-A1.scr             852   2019 01 29 18:41:25

1 configuration script(s) found.
2046 Kbytes free.
(IP_switch_A_1) #
```

c. Apply the RCF script:

```
script apply BES-53248_v1.32_Switch-A1.scr
```

```
(IP_switch_A_1) #script apply BES-53248_v1.32_Switch-A1.scr

Are you sure you want to apply the configuration script? (y/n) y


config

set clibanner
"*********************************************************************
************

* NetApp Reference Configuration File (RCF)

*

* Switch    : BES-53248

...
The downloaded RCF is validated. Some output is being logged here.
...

Configuration script 'BES-53248_v1.32_Switch-A1.scr' applied.

(IP_switch_A_1) #
```

d. Save the configuration:

```
write memory
```

```
(IP_switch_A_1) #write memory

This operation may take a few minutes.
Management interfaces will not be available during this time.

Are you sure you want to save? (y/n) y


Configuration Saved!

(IP_switch_A_1) #
```

e. Reboot the switch:

   `reload`

```
(IP_switch_A_1) #reload

Are you sure you would like to reset the system? (y/n) y
```

f. Repeat the previous steps for each of the other three switches, being sure to copy the matching RCF file to the corresponding switch.

3. Reload the switch:

   `reload`

```
IP_switch_A_1# reload
```

4. Repeat the previous steps on the other three switches in the MetroCluster IP configuration.

Disable unused ISL ports and port channels

NetApp recommends disabling unused ISL ports and port channels to avoid unnecessary health alerts.

1. Identify the unused ISL ports and port channels using the RCF file banner:

> If the port is in breakout mode, the port name you specify in the command might be different than the name stated in the RCF banner. You can also use the RCF cabling files to find the port name.

For ISL port details

Run the command `show port all`.

For port channel details

Run the command `show port-channel all`.

2. Disable the unused ISL ports and port channels.

   You must run the following commands for each identified unused port or port channel.

```
(SwtichA_1)> enable
(SwtichA_1)# configure
(SwtichA_1)(Config)# <port_name>
(SwtichA_1)(Interface 0/15)# shutdown
(SwtichA_1)(Interface 0/15)# end
(SwtichA_1)# write memory
```

Configure Cisco IP switches

Configuring Cisco IP switches

You must configure the Cisco IP switches for use as the cluster interconnect and for backend MetroCluster IP connectivity.

About this task

Several of the procedures in this section are independent procedures and you only need to execute those you are directed to or are relevant to your task.

Resetting the Cisco IP switch to factory defaults

Before installing any RCF file, you must erase the Cisco switch configuration and perform basic configuration. This procedure is required when you want to reinstall the same RCF file after a previous installation failed, or if you want to install a new version of an RCF file.

About this task

- You must repeat these steps on each of the IP switches in the MetroCluster IP configuration.
- You must be connected to the switch using the serial console.
- This task resets the configuration of the management network.

Steps

1. Reset the switch to factory defaults:
   a. Erase the existing configuration:

```
write erase
```

b. Reload the switch software:

```
reload
```

The system reboots and enters the configuration wizard. During the boot, if you receive the prompt “Abort Auto Provisioning and continue with normal setup? (yes/no)[n]”, you should respond `yes` to proceed.

c. In the configuration wizard, enter the basic switch settings:

- Admin password
- Switch name
- Out-of-band management configuration
- Default gateway
- SSH service (RSA)

After completing the configuration wizard, the switch reboots.

d. When prompted, enter the user name and password to log in to the switch.

The following example shows the prompts and system responses when configuring the switch. The angle brackets (<<<) show where you enter the information.

```
---- System Admin Account Setup ----
Do you want to enforce secure password standard (yes/no) [y]:y
**<<<**

    Enter the password for "admin": password
  Confirm the password for "admin": password
         ---- Basic System Configuration Dialog VDC: 1 ----

This setup utility will guide you through the basic configuration of
the system. Setup configures only enough connectivity for management
of the system.

Please register Cisco Nexus3000 Family devices promptly with your
supplier. Failure to register may affect response times for initial
service calls. Nexus3000 devices must be registered to receive
entitled support services.

Press Enter at anytime to skip a dialog. Use ctrl-c at anytime
to skip the remaining dialogs.
```

You enter basic information in the next set of prompts, including the switch name, management address, and gateway, and select SSH with RSA.

```
Would you like to enter the basic configuration dialog (yes/no): yes
  Create another login account (yes/no) [n]:
  Configure read-only SNMP community string (yes/no) [n]:
  Configure read-write SNMP community string (yes/no) [n]:
  Enter the switch name : switch-name **<<<**
  Continue with Out-of-band (mgmt0) management configuration?
(yes/no) [y]:
    Mgmt0 IPv4 address : management-IP-address  **<<<**
    Mgmt0 IPv4 netmask : management-IP-netmask  **<<<**
  Configure the default gateway? (yes/no) [y]: y **<<<**
    IPv4 address of the default gateway : gateway-IP-address  **<<<**
  Configure advanced IP options? (yes/no) [n]:
  Enable the telnet service? (yes/no) [n]:
  Enable the ssh service? (yes/no) [y]: y  **<<<**
    Type of ssh key you would like to generate (dsa/rsa) [rsa]: rsa
**<<<**
    Number of rsa key bits <1024-2048> [1024]:
  Configure the ntp server? (yes/no) [n]:
  Configure default interface layer (L3/L2) [L2]:
  Configure default switchport interface state (shut/noshut)
[noshut]: shut **<<<**
  Configure CoPP system profile (strict/moderate/lenient/dense)
[strict]:
```

The final set of prompts completes the configuration:

```
The following configuration will be applied:
  password strength-check
  switchname IP_switch_A_1
vrf context management
ip route 0.0.0.0/0 10.10.99.1
exit
  no feature telnet
  ssh key rsa 1024 force
  feature ssh
  system default switchport
  system default switchport shutdown
  copp profile strict
interface mgmt0
ip address 10.10.99.10 255.255.255.0
no shutdown

Would you like to edit the configuration? (yes/no) [n]:

Use this configuration and save it? (yes/no) [y]:
2017 Jun 13 21:24:43 A1 %$ VDC-1 %$ %COPP-2-COPP_POLICY: Control-
Plane is protected with policy copp-system-p-policy-strict.

[##########################################] 100%
Copy complete.

User Access Verification
IP_switch_A_1 login: admin
Password:
Cisco Nexus Operating System (NX-OS) Software
.
.
.
IP_switch_A_1#
```

2. Save the configuration:

```
IP_switch-A-1# copy running-config startup-config
```

3. Reboot the switch and wait for the switch to reload:

```
IP_switch-A-1# reload
```

4. Repeat the previous steps on the other three switches in the MetroCluster IP configuration.

Downloading and installing the Cisco switch NX-OS software

You must download the switch operating system file and RCF file to each switch in the MetroCluster IP configuration.

About this task

This task requires file transfer software, such as FTP, TFTP, SFTP, or SCP, to copy the files to the switches.

These steps must be repeated on each of the IP switches in the MetroCluster IP configuration.

You must use the supported switch software version.

NetApp Hardware Universe

Steps

1. Download the supported NX-OS software file.

   Cisco Software Download

2. Copy the switch software to the switch:

   ```
   copy sftp://root@server-ip-address/tftpboot/NX-OS-file-name bootflash: vrf
   management
   ```

   In this example, the nxos.7.0.3.I4.6.bin file is copied from SFTP server 10.10.99.99 to the local bootflash:

   ```
   IP_switch_A_1# copy sftp://root@10.10.99.99/tftpboot/nxos.7.0.3.I4.6.bin
   bootflash: vrf management
   root@10.10.99.99's password: password
   sftp> progress
   Progress meter enabled
   sftp> get   /tftpboot/nxos.7.0.3.I4.6.bin
   /bootflash/nxos.7.0.3.I4.6.bin
   Fetching /tftpboot/nxos.7.0.3.I4.6.bin to /bootflash/nxos.7.0.3.I4.6.bin
   /tftpboot/nxos.7.0.3.I4.6.bin                 100%  666MB   7.2MB/s
   01:32
   sftp> exit
   Copy complete, now saving to disk (please wait)...
   ```

3. Verify on each switch that the switch NX-OS files are present in each switch's bootflash directory:

   ```
   dir bootflash:
   ```

   The following example shows that the files are present on IP_switch_A_1:

```
IP_switch_A_1# dir bootflash:
                  .
                  .
                  .
  698629632    Jun 13 21:37:44 2017  nxos.7.0.3.I4.6.bin
                  .
                  .
                  .

Usage for bootflash://sup-local
 1779363840 bytes used
13238841344 bytes free
15018205184 bytes total
IP_switch_A_1#
```

4. Install the switch software:

   `install all nxos bootflash:nxos.version-number.bin`

   The switch will reload (reboot) automatically after the switch software has been installed.

   The following example shows the software installation on IP_switch_A_1:

```
IP_switch_A_1# install all nxos bootflash:nxos.7.0.3.I4.6.bin
Installer will perform compatibility check first. Please wait.
Installer is forced disruptive

Verifying image bootflash:/nxos.7.0.3.I4.6.bin for boot variable "nxos".
[####################] 100% -- SUCCESS

Verifying image type.
[####################] 100% -- SUCCESS

Preparing "nxos" version info using image
bootflash:/nxos.7.0.3.I4.6.bin.
[####################] 100% -- SUCCESS

Preparing "bios" version info using image
bootflash:/nxos.7.0.3.I4.6.bin.
[####################] 100% -- SUCCESS       [####################] 100%
-- SUCCESS

Performing module support checks.            [####################] 100%
-- SUCCESS

Notifying services about system upgrade.     [####################] 100%
```

```
-- SUCCESS



Compatibility check is done:
Module  bootable          Impact  Install-type  Reason
------  --------  --------------  ------------  ------
     1       yes      disruptive         reset  default upgrade is not
hitless



Images will be upgraded according to following table:
Module       Image   Running-Version(pri:alt)         New-Version   Upg-
Required
------  ----------   ------------------------  ------------------
------------
     1        nxos                7.0(3)I4(1)         7.0(3)I4(6)   yes
     1        bios         v04.24(04/21/2016)  v04.24(04/21/2016)   no


Switch will be reloaded for disruptive upgrade.
Do you want to continue with the installation (y/n)?  [n] y


Install is in progress, please wait.

Performing runtime checks.         [####################] 100%    --
SUCCESS

Setting boot variables.
[####################] 100% -- SUCCESS

Performing configuration copy.
[####################] 100% -- SUCCESS

Module 1: Refreshing compact flash and upgrading bios/loader/bootrom.
Warning: please do not remove or power off the module at this time.
[####################] 100% -- SUCCESS


Finishing the upgrade, switch will reboot in 10 seconds.
IP_switch_A_1#
```

5. Wait for the switch to reload and then log in to the switch.

   After the switch has rebooted the login prompt is displayed:

```
User Access Verification
IP_switch_A_1 login: admin
Password:
Cisco Nexus Operating System (NX-OS) Software
TAC support: http://www.cisco.com/tac
Copyright (C) 2002-2017, Cisco and/or its affiliates.
All rights reserved.
.
.
.
MDP database restore in progress.
IP_switch_A_1#

The switch software is now installed.
```

6. Verify that the switch software has been installed:
   `show version`

   The following example shows the output:

```
IP_switch_A_1# show version
Cisco Nexus Operating System (NX-OS) Software
TAC support: http://www.cisco.com/tac
Copyright (C) 2002-2017, Cisco and/or its affiliates.
All rights reserved.
.
.
.

Software
  BIOS: version 04.24
  NXOS: version 7.0(3)I4(6)   **<<< switch software version**
  BIOS compile time:  04/21/2016
  NXOS image file is: bootflash:///nxos.7.0.3.I4.6.bin
  NXOS compile time:  3/9/2017 22:00:00 [03/10/2017 07:05:18]


Hardware
  cisco Nexus 3132QV Chassis
  Intel(R) Core(TM) i3- CPU @ 2.50GHz with 16401416 kB of memory.
  Processor Board ID FOC20123GPS

  Device name: A1
  bootflash:   14900224 kB
  usb1:               0 kB (expansion flash)

Kernel uptime is 0 day(s), 0 hour(s), 1 minute(s), 49 second(s)

Last reset at 403451 usecs after  Mon Jun 10 21:43:52 2017

  Reason: Reset due to upgrade
  System version: 7.0(3)I4(1)
  Service:

plugin
  Core Plugin, Ethernet Plugin
IP_switch_A_1#
```

7. Repeat these steps on the remaining three IP switches in the MetroCluster IP configuration.

Downloading and installing the Cisco IP RCF files

You must download the RCF file to each switch in the MetroCluster IP configuration.

About this task

This task requires file transfer software, such as FTP, TFTP, SFTP, or SCP, to copy the files to the switches.

These steps must be repeated on each of the IP switches in the MetroCluster IP configuration.

You must use the supported switch software version.

NetApp Hardware Universe

There are four RCF files, one for each of the four switches in the MetroCluster IP configuration. You must use the correct RCF files for the switch model you are using.

Switch	RCF file
IP_switch_A_1	NX3232_v1.80_Switch-A1.txt
IP_switch_A_2	NX3232_v1.80_Switch-A2.txt
IP_switch_B_1	NX3232_v1.80_Switch-B1.txt
IP_switch_B_2	NX3232_v1.80_Switch-B2.txt

Steps

1. Download the MetroCluster IP RCF files.

   Modifications to the RCF files after download are not supported.

2. Copy the RCF files to the switches:

   a. Copy the RCF files to the first switch:

   ```
   copy sftp://root@FTP-server-IP-address/tftpboot/switch-specific-RCF
   bootflash: vrf management
   ```

   In this example, the NX3232_v1.80_Switch-A1.txt RCF file is copied from the SFTP server at 10.10.99.99 to the local bootflash. You must use the IP address of your TFTP/SFTP server and the file name of the RCF file that you need to install.

```
IP_switch_A_1# copy
sftp://root@10.10.99.99/tftpboot/NX3232_v1.80_Switch-A1.txt
bootflash: vrf management
root@10.10.99.99's password: password
sftp> progress
Progress meter enabled
sftp> get   /tftpboot/NX3232_v1.80_Switch-A1.txt
/bootflash/NX3232_v1.80_Switch-A1.txt
Fetching /tftpboot/NX3232_v1.80_Switch-A1.txt to
/bootflash/NX3232_v1.80_Switch-A1.txt
/tftpboot/NX3232_v1.80_Switch-A1.txt          100% 5141     5.0KB/s
00:00
sftp> exit
Copy complete, now saving to disk (please wait)...
IP_switch_A_1#
```

b. Repeat the previous substep for each of the other three switches, being sure to copy the matching RCF file to the corresponding switch.

3. Verify on each switch that the RCF file is present in each switch's bootflash directory:

```
dir bootflash:
```

The following example shows that the files are present on IP_switch_A_1:

```
IP_switch_A_1# dir bootflash:
                  .
                  .
                  .
5514    Jun 13 22:09:05 2017  NX3232_v1.80_Switch-A1.txt
                  .
                  .
                  .

Usage for bootflash://sup-local
1779363840 bytes used
13238841344 bytes free
15018205184 bytes total
IP_switch_A_1#
```

4. Configure the TCAM regions on Cisco 3132Q-V and Cisco 3232C switches.

> Skip this step if you do not have Cisco 3132Q-V or Cisco 3232C switches.

a. On Cisco 3132Q-V switch, set the following TCAM regions:

```
conf t
hardware access-list tcam region span 0
hardware access-list tcam region racl 256
hardware access-list tcam region e-racl 256
hardware access-list tcam region qos 256
```

b. On Cisco 3232C switch, set the following TCAM regions:

```
conf t
hardware access-list tcam region span 0
hardware access-list tcam region racl-lite 0
hardware access-list tcam region racl 256
hardware access-list tcam region e-racl 256
hardware access-list tcam region qos 256
```

c. After setting the TCAM regions, save the configuration and reload the switch:

```
copy running-config startup-config
reload
```

5. Copy the matching RCF file from the local bootflash to the running configuration on each switch:

   `copy bootflash:switch-specific-RCF.txt running-config`

6. Copy the RCF files from the running configuration to the startup configuration on each switch:

   `copy running-config startup-config`

   You should see output similar to the following:

```
IP_switch_A_1# copy bootflash:NX3232_v1.80_Switch-A1.txt running-config
IP_switch-A-1# copy running-config startup-config
```

7. Reload the switch:

   `reload`

```
IP_switch_A_1# reload
```

8. Repeat the previous steps on the other three switches in the MetroCluster IP configuration.

Setting Forward Error Correction for systems using 25-Gbps connectivity

If your system is configured using 25-Gbps connectivity, you need to set the Forward Error Correction (fec) parameter manually to off after applying the RCF file. The RCF file does not apply this setting.

About this task

The 25-Gbps ports must be cabled prior to performing this procedure.

Platform port assignments for Cisco 3232C or Cisco 9336C switches

This task only applies to platforms using 25-Gbps connectivity:

- AFF A300
- FAS 8200
- FAS 500f
- AFF A250

This task must be performed on all four switches in the MetroCluster IP configuration.

Steps

1. Set the fec parameter to off on each 25-Gbps port that is connected to a controller module, and then copy the running configuration to the startup configuration:
   a. Enter configuration mode: `config t`
   b. Specify the 25-Gbps interface to configure: `interface interface-ID`
   c. Set fec to off: `fec off`
   d. Repeat the previous steps for each 25-Gbps port on the switch.
   e. Exit configuration mode: `exit`

   The following example shows the commands for interface Ethernet1/25/1 on switch IP_switch_A_1:

   ```
   IP_switch_A_1# conf t
   IP_switch_A_1(config)# interface Ethernet1/25/1
   IP_switch_A_1(config-if)# fec off
   IP_switch_A_1(config-if)# exit
   IP_switch_A_1(config-if)# end
   IP_switch_A_1# copy running-config startup-config
   ```

2. Repeat the previous step on the other three switches in the MetroCluster IP configuration.

Disable unused ISL ports and port channels

NetApp recommends disabling unused ISL ports and port channels to avoid unnecessary health alerts.

1. Identify the unused ISL ports and port channels:

   ```
   show interface brief
   ```

2. Disable the unused ISL ports and port channels.

You must run the following commands for each identified unused port or port channel.

```
SwitchA_1# config t
Enter configuration commands, one per line. End with CNTL/Z.
SwitchA_1(config)# int Eth1/14
SwitchA_1(config-if)# shutdown
SwitchA_12(config-if)# exit
SwitchA_1(config-if)# copy running-config startup-config
[########################################] 100%
Copy complete, now saving to disk (please wait)...
Copy complete.
```

Configure MACsec encryption on Cisco 9336C switches

If desired, you can configure MACsec encryption on the WAN ISL ports that run between the sites. You must configure MACsec after applying the correct RCF file.

> MACsec encryption can only be applied to the WAN ISL ports.

Configure MACsec encryption on Cisco 9336C switches

You must only configure MACsec encryption on the WAN ISL ports that run between the sites. You must configure MACsec after applying the correct RCF file.

Licensing requirements for MACsec

MACsec requires a security license. For a complete explanation of the Cisco NX-OS licensing scheme and how to obtain and apply for licenses, see the Cisco NX-OS Licensing Guide

Enable Cisco MACsec Encryption WAN ISLs in MetroCluster IP configurations

You can enable MACsec encryption for Cisco 9336C switches on the WAN ISLs in a MetroCluster IP configuration.

Steps

1. Enter global configuration mode:

   ```
   configure terminal
   ```

   ```
   IP_switch_A_1# configure terminal
   IP_switch_A_1(config)#
   ```

2. Enable MACsec and MKA on the device:

   ```
   feature macsec
   ```

```
IP_switch_A_1(config)# feature macsec
```

3. Copy the running configuration to the startup configuration:

   `copy running-config startup-config`

   ```
   IP_switch_A_1(config)# copy running-config startup-config
   ```

Configure a MACsec key chain and keys

You can create a MACsec key chain or keys on your configuration.

Key Lifetime and Hitless Key Rollover

A MACsec keychain can have multiple pre-shared keys (PSKs), each configured with a key ID and an optional lifetime. A key lifetime specifies at which time the key activates and expires. In the absence of a lifetime configuration, the default lifetime is unlimited. When a lifetime is configured, MKA rolls over to the next configured pre-shared key in the keychain after the lifetime is expired. The time zone of the key can be local or UTC. The default time zone is UTC. A key can roll over to a second key within the same keychain if you configure the second key (in the keychain) and configure a lifetime for the first key. When the lifetime of the first key expires, it automatically rolls over to the next key in the list. If the same key is configured on both sides of the link at the same time, then the key rollover is hitless (that is, the key rolls over without traffic interruption).

Steps

1. Enter the global configuration mode:

   `configure terminal`

   ```
   IP_switch_A_1# configure terminal
   IP_switch_A_1(config)#
   ```

2. To hide the encrypted key octet string, replace the string with a wildcard character in the output of the `show running-config` and `show startup-config` commands:

   ```
   IP_switch_A_1(config)# key-chain macsec-psk no-show
   ```

   > The octet string is also hidden when you save the configuration to a file.

   By default, PSK keys are displayed in encrypted format and can easily be decrypted. This command applies only to MACsec key chains.

3. Create a MACsec key chain to hold a set of MACsec keys and enter MACsec key chain configuration mode:

   `key chain name macsec`

```
IP_switch_A_1(config)# key chain 1 macsec
IP_switch_A_1(config-macseckeychain)#
```

4. Create a MACsec key and enter MACsec key configuration mode:

   `key key-id`

   The range is from 1 to 32 hex digit key-string, and the maximum size is 64 characters.

```
IP_switch_A_1 switch(config-macseckeychain)# key 1000
IP_switch_A_1 (config-macseckeychain-macseckey)#
```

5. Configure the octet string for the key:

   `key-octet-string octet-string cryptographic-algorithm AES_128_CMAC | AES_256_CMAC`

```
IP_switch_A_1(config-macseckeychain-macseckey)# key-octet-string
abcdef0123456789abcdef0123456789abcdef0123456789abcdef0123456789
cryptographic-algorithm AES_256_CMAC
```

> The octet-string argument can contain up to 64 hexadecimal characters. The octet key is encoded internally, so the key in clear text does not appear in the output of the `show running-config macsec` command.

6. Configure a send lifetime for the key (in seconds):

   `send-lifetime start-time duration duration`

```
IP_switch_A_1(config-macseckeychain-macseckey)# send-lifetime 00:00:00
Oct 04 2020 duration 100000
```

   By default, the device treats the start time as UTC. The start-time argument is the time of day and date that the key becomes active. The duration argument is the length of the lifetime in seconds. The maximum length is 2147483646 seconds (approximately 68 years).

7. Copy the running configuration to the startup configuration:

   `copy running-config startup-config`

```
IP_switch_A_1(config)# copy running-config startup-config
```

8. Displays the keychain configuration:

```
show key chain name
```

```
IP_switch_A_1(config-macseckeychain-macseckey)# show key chain 1
```

Configure a MACsec policy

Steps

1. Enter global configuration mode:

   ```
   configure terminal
   ```

   ```
   IP_switch_A_1# configure terminal
   IP_switch_A_1(config)#
   ```

2. Create a MACsec policy:

   ```
   macsec policy name
   ```

   ```
   IP_switch_A_1(config)# macsec policy abc
   IP_switch_A_1(config-macsec-policy)#
   ```

3. Configure one of the following ciphers, GCM-AES-128, GCM-AES-256, GCM-AES-XPN-128, or GCM-AES-XPN-256:

   ```
   cipher-suite name
   ```

   ```
   IP_switch_A_1(config-macsec-policy)# cipher-suite GCM-AES-256
   ```

4. Configure the key server priority to break the tie between peers during a key exchange:

   ```
   key-server-priority number
   ```

   ```
   switch(config-macsec-policy)# key-server-priority 0
   ```

5. Configure the security policy to define the handling of data and control packets:

   ```
   security-policy security policy
   ```

   Choose a security policy from the following options:

   - must-secure — packets not carrying MACsec headers are dropped
   - should-secure — packets not carrying MACsec headers are permitted (this is the default value)

```
IP_switch_A_1(config-macsec-policy)# security-policy should-secure
```

6. Configure the replay protection window so the secured interface does not accept a packet that is less than the configured window size: `window-size number`

   > The replay protection window size represents the maximum out-of-sequence frames that MACsec accepts and are not discarded. The range is from 0 to 596000000.

```
IP_switch_A_1(config-macsec-policy)# window-size 512
```

7. Configure the time in seconds to force an SAK rekey:

   `sak-expiry-time time`

   You can use this command to change the session key to a predictable time interval. The default is 0.

```
IP_switch_A_1(config-macsec-policy)# sak-expiry-time 100
```

8. Configure one of the following confidentiality offsets in the layer 2 frame where encryption begins:

   `conf-offsetconfidentiality offset`

   Choose from the following options:

   - CONF-OFFSET-0.
   - CONF-OFFSET-30.
   - CONF-OFFSET-50.

```
IP_switch_A_1(config-macsec-policy)# conf-offset CONF-OFFSET-0
```

   > This command might be necessary for intermediate switches to use packet headers (dmac, smac, etype) like MPLS tags.

9. Copy the running configuration to the startup configuration:

   `copy running-config startup-config`

```
IP_switch_A_1(config)# copy running-config startup-config
```

10. Display the MACsec policy configuration:

   `show macsec policy`

```
IP_switch_A_1(config-macsec-policy)# show macsec policy
```

Enable Cisco MACsec encryption on the interfaces

1. Enter global configuration mode:

   `configure terminal`

   ```
   IP_switch_A_1# configure terminal
   IP_switch_A_1(config)#
   ```

2. Select the interface that you configured with MACsec encryption.

   You can specify the interface type and identity. For an Ethernet port, use ethernet slot/port.

   ```
   IP_switch_A_1(config)# interface ethernet 1/15
   switch(config-if)#
   ```

3. Add the keychain and policy to be configured on the interface to add the MACsec configuration:

   `macsec keychain keychain-name policy policy-name`

   ```
   IP_switch_A_1(config-if)# macsec keychain 1 policy abc
   ```

4. Repeat steps 1 and 2 on all interfaces where MACsec encryption is to be configured.
5. Copy the running configuration to the startup configuration:

   `copy running-config startup-config`

   ```
   IP_switch_A_1(config)# copy running-config startup-config
   ```

Disable Cisco MACsec Encryption WAN ISLs in MetroCluster IP configurations

You might need to disable MACsec encryption for Cisco 9336C switches on the WAN ISLs in a MetroCluster IP configuration.

Steps

1. Enter global configuration mode:

   `configure terminal`

```
IP_switch_A_1# configure terminal
IP_switch_A_1(config)#
```

2. Disable the MACsec configuration on the device:

   `macsec shutdown`

   ```
   IP_switch_A_1(config)# macsec shutdown
   ```

   Selecting the “no” option restores the MACsec feature.

3. Select the interface that you already configured with MACsec.

   You can specify the interface type and identity. For an Ethernet port, use ethernet slot/port.

   ```
   IP_switch_A_1(config)# interface ethernet 1/15
   switch(config-if)#
   ```

4. Remove the keychain and policy configured on the interface to remove the MACsec configuration:

   `no macsec keychain keychain-name policy policy-name`

   ```
   IP_switch_A_1(config-if)# no macsec keychain 1 policy abc
   ```

5. Repeat steps 3 and 4 on all interfaces where MACsec is configured.
6. Copy the running configuration to the startup configuration:

   `copy running-config startup-config`

   ```
   IP_switch_A_1(config)# copy running-config startup-config
   ```

Verifying the MACsec configuration

Steps

1. Repeat **all** of the previous procedures on the second switch within the configuration to establish a MACsec session.
2. Run the following commands to verify that both switches are successfully encrypted:
   a. Run: `show macsec mka summary`
   b. Run: `show macsec mka session`
   c. Run: `show macsec mka statistics`

You can verify the MACsec configuration using the following commands:

Command	Displays information about…
`show macsec mka session interface typeslot/port number`	The MACsec MKA session for a specific interface or for all interfaces
`show key chain name`	The key chain configuration
`show macsec mka summary`	The MACsec MKA configuration
`show macsec policy policy-name`	The configuration for a specific MACsec policy or for all MACsec policies

Configure the NVIDIA IP SN2100 switch

You must configure the NVIDIA SN2100 IP switches for use as the cluster interconnect and for backend MetroCluster IP connectivity.

Reset the NVIDIA IP SN2100 switch to factory defaults

You can choose from the following methods to reset a switch to factory default settings.

- Reset the switch using the RCF file option
- Reset the switch using the Cumulus install option

Reset the switch using the RCF file option

Before installing a new RCF configuration you must revert the NVIDIA switch settings.

About this task

To restore the switch to default settings, run the RCF file with the `restoreDefaults` option. This option copies the original backed up files to their original location and then reboots the switch. After reboot, the switch comes online with the original configuration that existed when you first ran the RCF file to configure the switch.

The following configuration details are not reset:

- User and credential configuration
- Configuration of the management network port, eth0

> All other configuration changes that occur during application of the RCF file are reverted to the original configuration.

Before you begin

- You must configure the switch according to Download and install the NVIDIA RCF file. If you have not configured in this manner, or you have configured additional features before running the RCF file, you cannot use this procedure.
- You must repeat these steps on each of the IP switches in the MetroCluster IP configuration.

- You must be connected to the switch with a serial console connection.
- This task resets the configuration of the management network.

Steps

1. Verify that the RCF configuration was successfully applied with the same or a compatible RCF file version and that the backup files exist.

> The output can show backup files, preserved files, or both. If backup files or preserved files do not appear in the output, you cannot use this procedure.

```
cumulus@IP_switch_A_1:mgmt:~$ sudo python3 MSN2100_v1.0_IP_switch_A_1.py
[sudo] password for cumulus:
>>> Opened RcfApplyLog
A RCF configuration has been successfully applied.
  Backup files exist.
    Preserved files exist.
    Listing completion of the steps:
        Success: Step: 1: Performing Backup and Restore
        Success: Step: 2: updating MOTD file
        Success: Step: 3: Disabling apt-get
        Success: Step: 4: Disabling cdp
        Success: Step: 5: Adding lldp config
        Success: Step: 6: Creating interfaces
        Success: Step: 7: Configuring switch basic settings: Hostname,
SNMP
        Success: Step: 8: Configuring switch basic settings: bandwidth
allocation
        Success: Step: 9: Configuring switch basic settings: ecn
        Success: Step: 10: Configuring switch basic settings: cos and
dscp remark
        Success: Step: 11: Configuring switch basic settings: generic
egress cos mappings
        Success: Step: 12: Configuring switch basic settings: traffic
classification
        Success: Step: 13: Configuring LAG load balancing policies
        Success: Step: 14: Configuring the VLAN bridge
        Success: Step: 15: Configuring local cluster ISL ports
        Success: Step: 16: Configuring MetroCluster ISL ports
        Success: Step: 17: Configuring ports for MetroCluster-1, local
cluster and MetroCluster interfaces
        Success: Step: 18: Configuring ports for MetroCluster-2, local
cluster and MetroCluster interfaces
        Success: Step: 19: Configuring ports for MetroCluster-3, local
cluster and MetroCluster interfaces
        Success: Step: 20: Configuring L2FC for MetroCluster interfaces
        Success: Step: 21: Configuring the interface to UP
        Success: Step: 22: Final commit
        Success: Step: 23: Final reboot of the switch
    Exiting ...
<<< Closing RcfApplyLog
cumulus@IP_switch_A_1:mgmt:~$
```

2. Run the RCF file with the option to restore defaults: `restoreDefaults`

```
cumulus@IP_switch_A_1:mgmt:~$ sudo python3 MSN2100_v1.0_IP_switch_A_2.py
restoreDefaults
[sudo] password for cumulus:
>>> Opened RcfApplyLog
Can restore from backup directory. Continuing.
This will reboot the switch !!!
Enter yes or no: yes
```

3. Respond 'yes' to the prompt. The switch reverts to the original configuration and reboots.
4. Wait for the switch to reboot.

   The switch is reset and retains the initial configuration such as management network configuration and current credentials as they existed before applying the RCF file. After reboot you can apply a new configuration by using the same or a different version of the RCF file.

Reset the switch using the Cumulus install option

About this task

Use these steps if you want to reset the switch completely by applying the Cumulus image.

Before you begin

- You must be connected to the switch with a serial console connection.
- The Cumulus switch software image is accessible through HTTP.

> For more information about installing Cumulus Linux, see Overview of installation and configuration for NVIDIA SN2100 switches

- You must have the root password for `sudo` access to the commands.

Steps

1. From the Cumulus console download and queue the switch software installation with the command `onie-install -a -i` followed by the file path to the switch software:

   In this example the firmware file `cumulus-linux-4.4.2-mlx-amd64.bin` is copied from the HTTP server '50.50.50.50' to the local switch.

```
cumulus@IP_switch_A_1:mgmt:~$ sudo onie-install -a -i
http://50.50.50.50/switchsoftware/cumulus-linux-4.4.2-mlx-amd64.bin
Fetching installer: http://50.50.50.50/switchsoftware/cumulus-linux-
4.4.2-mlx-amd64.bin
Downloading URL: http://50.50.50.50/switchsoftware/cumulus-linux-4.4.2-
mlx-amd64.bin
#######################################################################
# 100.0%
Success: HTTP download complete.
tar: ./sysroot.tar: time stamp 2021-01-30 17:00:58 is 53895092.604407122
```

```
s in the future
tar: ./kernel: time stamp 2021-01-30 17:00:58 is 53895092.582826352 s in
the future
tar: ./initrd: time stamp 2021-01-30 17:00:58 is 53895092.509682557 s in
the future
tar: ./embedded-installer/bootloader/grub: time stamp 2020-12-10
15:25:16 is 49482950.509433937 s in the future
tar: ./embedded-installer/bootloader/init: time stamp 2020-12-10
15:25:16 is 49482950.509336507 s in the future
tar: ./embedded-installer/bootloader/uboot: time stamp 2020-12-10
15:25:16 is 49482950.509213637 s in the future
tar: ./embedded-installer/bootloader: time stamp 2020-12-10 15:25:16 is
49482950.509153787 s in the future
tar: ./embedded-installer/lib/init: time stamp 2020-12-10 15:25:16 is
49482950.509064547 s in the future
tar: ./embedded-installer/lib/logging: time stamp 2020-12-10 15:25:16 is
49482950.508997777 s in the future
tar: ./embedded-installer/lib/platform: time stamp 2020-12-10 15:25:16
is 49482950.508913317 s in the future
tar: ./embedded-installer/lib/utility: time stamp 2020-12-10 15:25:16 is
49482950.508847367 s in the future
tar: ./embedded-installer/lib/check-onie: time stamp 2020-12-10 15:25:16
is 49482950.508761477 s in the future
tar: ./embedded-installer/lib: time stamp 2020-12-10 15:25:47 is
49482981.508710647 s in the future
tar: ./embedded-installer/storage/blk: time stamp 2020-12-10 15:25:16 is
49482950.508631277 s in the future
tar: ./embedded-installer/storage/gpt: time stamp 2020-12-10 15:25:16 is
49482950.508523097 s in the future
tar: ./embedded-installer/storage/init: time stamp 2020-12-10 15:25:16
is 49482950.508437507 s in the future
tar: ./embedded-installer/storage/mbr: time stamp 2020-12-10 15:25:16 is
49482950.508371177 s in the future
tar: ./embedded-installer/storage/mtd: time stamp 2020-12-10 15:25:16 is
49482950.508293856 s in the future
tar: ./embedded-installer/storage: time stamp 2020-12-10 15:25:16 is
49482950.508243666 s in the future
tar: ./embedded-installer/platforms.db: time stamp 2020-12-10 15:25:16
is 49482950.508179456 s in the future
tar: ./embedded-installer/install: time stamp 2020-12-10 15:25:47 is
49482981.508094606 s in the future
tar: ./embedded-installer: time stamp 2020-12-10 15:25:47 is
49482981.508044066 s in the future
tar: ./control: time stamp 2021-01-30 17:00:58 is 53895092.507984316 s
in the future
tar: .: time stamp 2021-01-30 17:00:58 is 53895092.507920196 s in the
```

```
future
Staging installer image...done.
WARNING:
WARNING: Activating staged installer requested.
WARNING: This action will wipe out all system data.
WARNING: Make sure to back up your data.
WARNING:
Are you sure (y/N)? y
Activating staged installer...done.
Reboot required to take effect.
cumulus@IP_switch_A_1:mgmt:~$
```

2. Respond `y` to the prompt to confirm the installation when the image is downloaded and verified.
3. Reboot the switch to install the new software: `sudo reboot`

```
cumulus@IP_switch_A_1:mgmt:~$ sudo reboot
```

> The switch reboots and enters the switch software installation which takes some time. When the installation is complete, the switch reboots and remains at the 'log-in' prompt.

4. Configure the basic switch settings
   a. When the switch is booted and at the log-in prompt, log in and change the password.

      > The username is 'cumulus' and the default password is 'cumulus'.

```
Debian GNU/Linux 10 cumulus ttyS0

cumulus login: cumulus
Password:
You are required to change your password immediately (administrator
enforced)
Changing password for cumulus.
Current password:
New password:
Retype new password:
Linux cumulus 4.19.0-cl-1-amd64 #1 SMP Cumulus 4.19.206-1+cl4.4.2u1
(2021-12-18) x86_64

Welcome to NVIDIA Cumulus (R) Linux (R)

For support and online technical documentation, visit
http://www.cumulusnetworks.com/support

The registered trademark Linux (R) is used pursuant to a sublicense from
LMI,
the exclusive licensee of Linus Torvalds, owner of the mark on a world-
wide
basis.

cumulus@cumulus:mgmt:~$
```

5. Configure the management network interface.

> The following example shows how to configure the hostname (IP_switch_A_1), IP address (10.10.10.10), netmask (255.255.255.0 (24)), and gateway (10.10.10.1) using the commands: `net add hostname <hostname>`, `net add interface eth0 ip address <IPAddress/mask>`, and `net add interface eth0 ip gateway <Gateway>`.

```
cumulus@cumulus:mgmt:~$ net add hostname IP_switch_A_1
cumulus@cumulus:mgmt:~$ net add interface eth0 ip address 10.0.10.10/24
cumulus@cumulus:mgmt:~$ net add interface eth0 ip gateway 10.10.10.1
cumulus@cumulus:mgmt:~$ net pending

.
.
.


cumulus@cumulus:mgmt:~$ net commit

.
.
.


net add/del commands since the last "net commit"


User Timestamp Command

cumulus 2021-05-17 22:21:57.437099 net add hostname Switch-A-1
cumulus 2021-05-17 22:21:57.538639 net add interface eth0 ip address
10.10.10.10/24
cumulus 2021-05-17 22:21:57.635729 net add interface eth0 ip gateway
10.10.10.1

cumulus@cumulus:mgmt:~$
```

6. Reboot the switch using the `sudo reboot` command.

```
cumulus@cumulus:~$ sudo reboot
```

When the switch reboots, you can apply a new configuration using the steps in Download and install the NVIDIA RCF file.

Download and install the NVIDIA RCF files

You must download and install the switch RCF file to each switch in the MetroCluster IP configuration.

Before you begin

- You must have the root password for `sudo` access to the commands.
- The switch software is installed and the management network is configured.

- You followed the steps to initially install the switch by using either method 1 or method 2.
- You did not apply any additional configuration after the initial installation.

> If you perform further configuration after resetting the switch and before applying the RCF file, you cannot use this procedure.

About this task

You must repeat these steps on each of the IP switches in the MetroCluster IP configuration (new installation) or on the replacement switch (switch replacement).

Steps

1. Generate the NVIDIA RCF files for MetroCluster IP.
   a. Download the RcfFileGenerator for MetroCluster IP.
   b. Generate the RCF file for your configuration by using the RcfFileGenerator for MetroCluster IP.
   c. Navigate to your home directory. If you are logged as 'cumulus', the file path is `/home/cumulus`.

```
cumulus@IP_switch_A_1:mgmt:~$ cd ~
cumulus@IP_switch_A_1:mgmt:~$ pwd
/home/cumulus
cumulus@IP_switch_A_1:mgmt:~$
```

   d. Download the RCF file to this directory. The following example shows that you use SCP to download the file `MSN2100_v1.0_IP_switch_A_1.txt` from server '50.50.50.50' to your home directory and save it as `MSN2100_v1.0_IP_switch_A_1.py`:

```
cumulus@Switch-A-1:mgmt:~$ scp
username@50.50.50.50:/RcfFiles/MSN2100_v1.0_IP_switch_A_1.txt
./MSN2100_v1.0_IP_switch-A1.py
The authenticity of host '50.50.50.50 (50.50.50.50)' can't be
established.
RSA key fingerprint is
SHA256:B5gBtOmNZvdKiY+dPhh8=ZK9DaKG7g6sv+2gFlGVF8E.
Are you sure you want to continue connecting (yes/no)? yes
Warning: Permanently added '50.50.50.50' (RSA) to the list of known
hosts.
*******************************************************************
**
Banner of the SCP server
*******************************************************************
**
username@50.50.50.50's password:
MSN2100_v1.0-X2_IP_switch_A1.txt 100% 55KB 1.4MB/s 00:00
cumulus@IP_switch_A_1:mgmt:~$
```

2. Execute the RCF file. The RCF file requires an option to apply one or more steps. Unless instructed by technical support, run the RCF file without the command line option. To verify the completion status of the various steps of the RCF file, use the option '-1' or 'all' to apply all (pending) steps.

```
cumulus@IP_switch_A_1:mgmt:~$ sudo python3 MSN2100_v1.0_IP_switch_A_1.py
all
[sudo] password for cumulus:
The switch will be rebooted after the step(s) have been run.
Enter yes or no: yes



... the steps will apply - this is generating a lot of output ...



Running Step 24: Final reboot of the switch



... The switch will reboot if all steps applied successfully ...
```

Disable unused ISL ports and port channels

NetApp recommends disabling unused ISL ports and port channels to avoid unnecessary health alerts.

1. Identify the unused ISL ports and port channels using the RCF file banner:

   > If the port is in breakout mode, the port name you specify in the command might be different than the name stated in the RCF banner. You can also use the RCF cabling files to find the port name.

   ```
   net show interface
   ```

2. Disable the unused ISL ports and port channels using the RCF file.

```
cumulus@mcc1-integrity-a1:mgmt:~$ sudo python3 SN2100_v2.0_IP_Switch-
A1.py runCmd
[sudo] password for cumulus:
    Running cumulus version  : 5.4.0
    Running RCF file version : v2.0
Help for runCmd:
    To run a command execute the RCF script as follows:
    sudo python3 <script> runCmd <option-1> <option-2> <option-x>
    Depending on the command more or less options are required. Example
to 'up' port 'swp1'
        sudo python3 SN2100_v2.0_IP_Switch-A1.py runCmd swp1 up
    Available commands:
        UP / DOWN the switchport
            sudo python3 SN2100_v2.0_IP_Switch-A1.py runCmd <switchport>
state <up | down>
        Set the switch port speed
            sudo python3 SN2100_v2.0_Switch-A1.py runCmd <switchport>
speed <10 | 25 | 40 | 100 | AN>
        Set the fec mode on the switch port
            sudo python3 SN2100_v2.0_Switch-A1.py runCmd <switchport>
fec <default | auto | rs | baser | off>
        Set the [localISL | remoteISL] to 'UP' or 'DOWN' state
            sudo python3 SN2100_v2.0_Switch-A1.py runCmd [localISL |
remoteISL] state [up | down]
        Set the option on the port to support DAC cables. This option
does not support port ranges.
            You must reload the switch after changing this option for
the required ports. This will disrupt traffic.
            This setting requires Cumulus 5.4 or a later 5.x release.
            sudo python3 SN2100_v2.0_Switch-A1.py runCmd <switchport>
DacOption [enable | disable]
cumulus@mcc1-integrity-a1:mgmt:~$
```

The following example command disables port "swp14":

```
sudo python3 SN2100_v2.0_Switch-A1.py runCmd swp14 state down
```

Repeat this step for each identified unused port or port channel.

Configure MetroCluster IP switches for health monitoring

In MetroCluster IP configurations, you can configure SNMPv3 to monitor the health of IP switches.

Step 1: Configure the SNMPv3 user on MetroCluster IP switches

Use the following steps to configure the SNMPv3 user on the MetroCluster IP switches.

> You must use both the authentication and privacy protocols in the commands. Using authentication without privacy is not supported.

For Broadcom IP switches

Steps

1. If the 'network-admin' user group doesn't already exist, create it:

   ```
   (IP_switch_1) (Config)# snmp-server group network-admin v3 auth read
   "Default"
   ```

2. Confirm the 'network-admin' group has been created:

   ```
   (IP_switch_1) (Config)# show snmp group
   ```

3. Configure the SNMPv3 user on Broadcom IP switches:

   ```
   (IP_switch_1)# config
   (IP_switch_1) (Config)# snmp-server user <user_name> network-admin
   [auth-md5/auth-sha/noauth] "<auth_password>" [priv-aes128/priv-des]
   "<priv_password>"
   ```

   You must use quotation marks around the authentication and privacy passwords, as shown in the following example:

   ```
   snmp-server user admin1 network-admin auth-md5 "password" priv-des
   "password"
   ```

For Cisco IP switches

Steps

1. Run the following commands to configure the SNMPv3 user on a Cisco IP switch:

   ```
   IP_switch_A_1 # configure terminal
   IP_switch_A_1 (config) # snmp-server user <user_name>  auth
   [md5/sha/sha-256] <auth_password> priv (aes-128) <priv_password>
   ```

2. Verify that the SNMPv3 user is configured on the switch:

   ```
   IP_switch_A_1(config) # show snmp user <user_name>
   ```

   The following example output shows that the user `admin` is configured for SNMPv3:

```
IP_switch_A_1(config)# show snmp user admin
User                Auth      Priv(enforce) Groups
acl_filter

____                ____      _____________ ______
__________

admin               md5       aes-128(no)   network-admin
```

Step 2: Configure the SNMPv3 user in ONTAP

Use the following steps to configure the SNMPv3 user in ONTAP.

1. Configure the SNMPv3 user in ONTAP:

   ```
   security login create -user-or-group-name <user_name> -application snmp
   -authentication-method usm -remote-switch-ipaddress <ip_address>
   ```

2. Configure switch health monitoring to monitor the switch using the new SNMPv3 user:

   ```
   system switch ethernet modify -device <device_id> -snmp-version SNMPv3
   -community-or-username <user_name>
   ```

3. Verify that the device serial number that will be monitored with the newly created SNMPv3 user is correct:
   a. Display the switch health monitoring polling time period:

      ```
      system switch ethernet polling-interval show
      ```

   b. Run the following command after the polling time period has elapsed:

      ```
      system switch ethernet show-all -instance -device <device_serial_number>
      ```

Copyright information

Copyright © 2024 NetApp, Inc. All Rights Reserved. Printed in the U.S. No part of this document covered by copyright may be reproduced in any form or by any means—graphic, electronic, or mechanical, including photocopying, recording, taping, or storage in an electronic retrieval system—without prior written permission of the copyright owner.

Software derived from copyrighted NetApp material is subject to the following license and disclaimer:

THIS SOFTWARE IS PROVIDED BY NETAPP “AS IS” AND WITHOUT ANY EXPRESS OR IMPLIED WARRANTIES, INCLUDING, BUT NOT LIMITED TO, THE IMPLIED WARRANTIES OF MERCHANTABILITY AND FITNESS FOR A PARTICULAR PURPOSE, WHICH ARE HEREBY DISCLAIMED. IN NO EVENT SHALL NETAPP BE LIABLE FOR ANY DIRECT, INDIRECT, INCIDENTAL, SPECIAL, EXEMPLARY, OR CONSEQUENTIAL DAMAGES (INCLUDING, BUT NOT LIMITED TO, PROCUREMENT OF SUBSTITUTE GOODS OR SERVICES; LOSS OF USE, DATA, OR PROFITS; OR BUSINESS INTERRUPTION) HOWEVER CAUSED AND ON ANY THEORY OF LIABILITY, WHETHER IN CONTRACT, STRICT LIABILITY, OR TORT (INCLUDING NEGLIGENCE OR OTHERWISE) ARISING IN ANY WAY OUT OF THE USE OF THIS SOFTWARE, EVEN IF ADVISED OF THE POSSIBILITY OF SUCH DAMAGE.

NetApp reserves the right to change any products described herein at any time, and without notice. NetApp assumes no responsibility or liability arising from the use of products described herein, except as expressly agreed to in writing by NetApp. The use or purchase of this product does not convey a license under any patent rights, trademark rights, or any other intellectual property rights of NetApp.

The product described in this manual may be protected by one or more U.S. patents, foreign patents, or pending applications.

LIMITED RIGHTS LEGEND: Use, duplication, or disclosure by the government is subject to restrictions as set forth in subparagraph (b)(3) of the Rights in Technical Data -Noncommercial Items at DFARS 252.227-7013 (FEB 2014) and FAR 52.227-19 (DEC 2007).

Data contained herein pertains to a commercial product and/or commercial service (as defined in FAR 2.101) and is proprietary to NetApp, Inc. All NetApp technical data and computer software provided under this Agreement is commercial in nature and developed solely at private expense. The U.S. Government has a non-exclusive, non-transferrable, nonsublicensable, worldwide, limited irrevocable license to use the Data only in connection with and in support of the U.S. Government contract under which the Data was delivered. Except as provided herein, the Data may not be used, disclosed, reproduced, modified, performed, or displayed without the prior written approval of NetApp, Inc. United States Government license rights for the Department of Defense are limited to those rights identified in DFARS clause 252.227-7015(b) (FEB 2014).

Trademark information

NETAPP, the NETAPP logo, and the marks listed at http://www.netapp.com/TM are trademarks of NetApp, Inc. Other company and product names may be trademarks of their respective owners.