Connections in a stretch MetroCluster configurations with array LUNs

ONTAP MetroCluster

NetApp
March 22, 2024

This PDF was generated from https://docs.netapp.com/us-en/ontap-metrocluster/install-stretch/concept_stretch_mcc_configuration_with_array_luns.html on March 22, 2024. Always check docs.netapp.com for the latest.

Table of Contents

Connections in a stretch MetroCluster configurations with array LUNs . . . 1
Connections in a stretch MetroCluster configurations with array LUNs . . . 1
Example of a stretch MetroCluster configuration with array LUNs . . . 1
Examples of two-node stretch MetroCluster configurations with disks and array LUNs . . . 2
Example of a stretch MetroCluster configuration with E-Series storage arrays . . . 4

Connections in a stretch MetroCluster configurations with array LUNs

Connections in a stretch MetroCluster configurations with array LUNs

In a stretch MetroCluster configuration, with array LUNs, you must connect the FC-VI ports across controllers. Direct connectivity is supported between the controllers and E-Series storage arrays. For all other LUN configurations arrays, you must use FC switches in the configuration.

You can also set up a stretch MetroCluster configuration with both disks and array LUNs. In such a configuration, you must use either FC-to-SAS bridges or SAS optical cables to connect the controllers to disks.

Example of a stretch MetroCluster configuration with array LUNs

In a stretch MetroCluster configuration with array LUNs, you must cable the FC-VI ports for direct connectivity between the controllers. In addition, you must cable each controller HBA port to switch ports on the corresponding FC switches. Cabling to the array LUNs is the same as that in a fabric-attached MetroCluster, except for E-Series array LUNs, which can be directly connected.

The following illustration shows the FC-VI ports cabled across controllers A and B in a stretch MetroCluster configuration:

FAS9000 storage systems controller modules use four FC-VI ports each.

For configurations with E-Series array LUNs, you can directly attach the E-Series LUNs.

Direct Attach support for Stretch MetroCluster Configuration with NetApp E-Series array

Except for connecting the FC-VI ports, the rest of this procedure is for setting up a MetroCluster configuration with array LUNs, that are not using E-Series array LUNs. This requires FC switches that are the same as using array LUNs in fabric-attached configurations.

Examples of two-node stretch MetroCluster configurations with disks and array LUNs

For setting up a stretch MetroCluster configuration with native disks and array LUNs, you must use either FC-to-SAS bridges or SAS optical cables to connect the ONTAP systems to the disk shelves. In addition FC switches must be used for connecting array LUNs to the ONTAP systems.

A minimum of eight HBA ports are required for an ONTAP system to connect to both native disks and array LUNs.

In the following examples representing two-node stretch MetroCluster configurations with disks and array LUNs, HBA ports 0a through 0d are used for connection with array LUNs. HBA ports 1a through 1d are used for connections with native disks.

The following illustration shows a two-node stretch MetroCluster configuration in which the native disks are connected to the ONTAP systems using SAS optical cables:

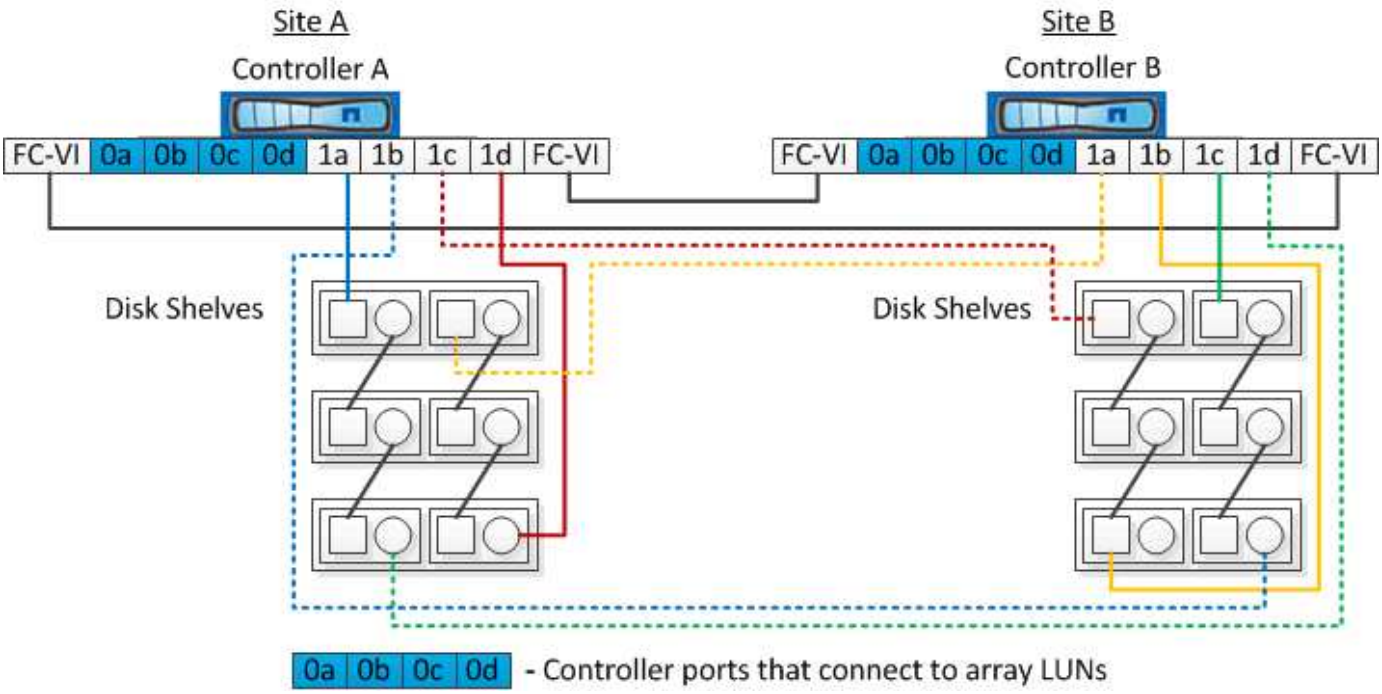

The following illustration shows a two-node stretch MetroCluster configuration in which the native disks are connected to the ONTAP systems using FC-to-SAS bridges:

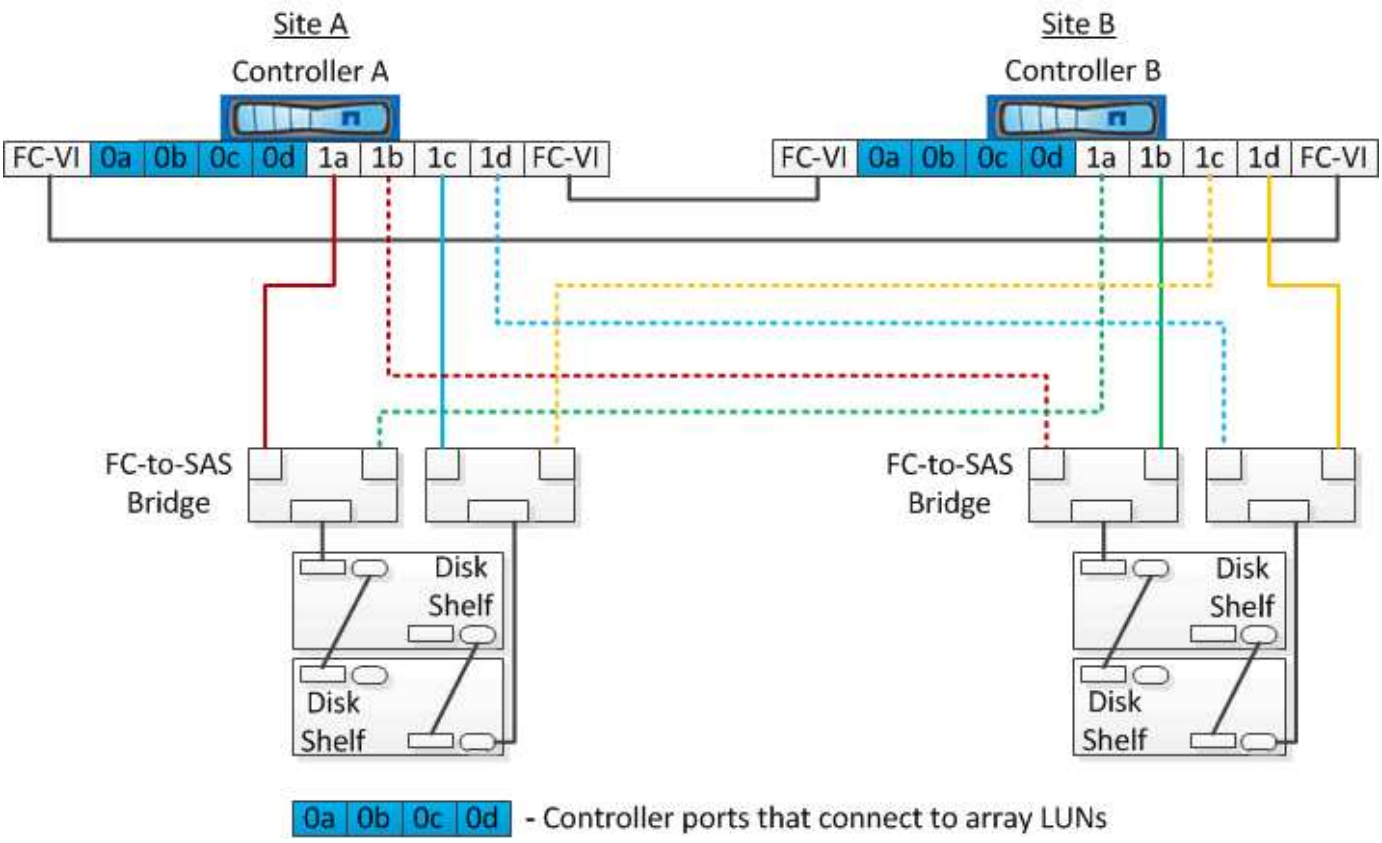

The following illustration shows a two-node stretch MetroCluster configuration with the array LUN connections:

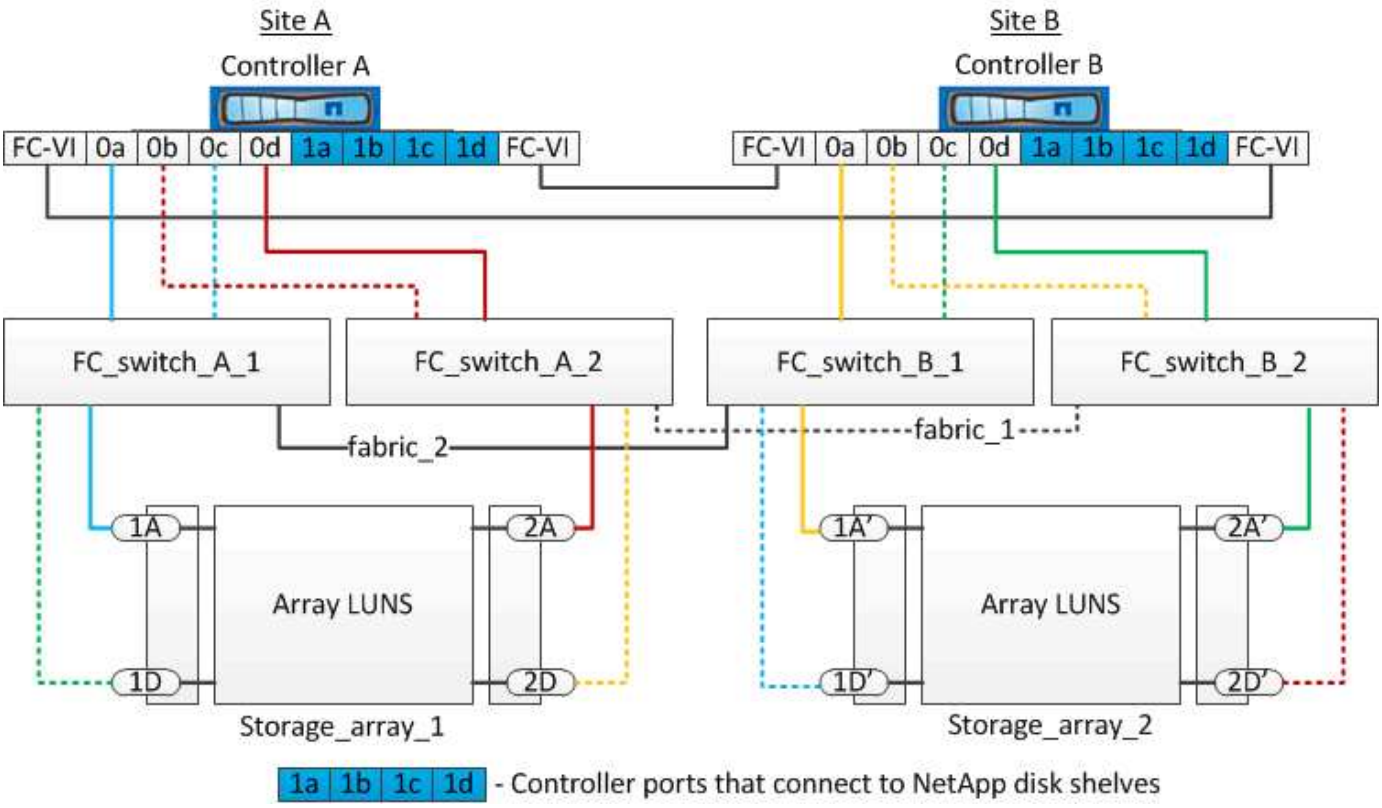

If required, you can also use the same FC switches to connect both native disks and array LUNs to the controllers in the MetroCluster configuration.

Example of a stretch MetroCluster configuration with E-Series storage arrays

In a stretch MetroCluster configuration with an E-Series storage array LUNs, you can directly connect the storage controllers and the storage arrays. Unlike other array LUNs, FC switches are not required.

The Direct Attach support for Stretch MetroCluster Configuration with NetApp E-Series array Knowledgebase article provides examples of configurations with E-Series array LUNs.

Copyright information

Copyright © 2024 NetApp, Inc. All Rights Reserved. Printed in the U.S. No part of this document covered by copyright may be reproduced in any form or by any means—graphic, electronic, or mechanical, including photocopying, recording, taping, or storage in an electronic retrieval system—without prior written permission of the copyright owner.

Software derived from copyrighted NetApp material is subject to the following license and disclaimer:

THIS SOFTWARE IS PROVIDED BY NETAPP “AS IS” AND WITHOUT ANY EXPRESS OR IMPLIED WARRANTIES, INCLUDING, BUT NOT LIMITED TO, THE IMPLIED WARRANTIES OF MERCHANTABILITY AND FITNESS FOR A PARTICULAR PURPOSE, WHICH ARE HEREBY DISCLAIMED. IN NO EVENT SHALL NETAPP BE LIABLE FOR ANY DIRECT, INDIRECT, INCIDENTAL, SPECIAL, EXEMPLARY, OR CONSEQUENTIAL DAMAGES (INCLUDING, BUT NOT LIMITED TO, PROCUREMENT OF SUBSTITUTE GOODS OR SERVICES; LOSS OF USE, DATA, OR PROFITS; OR BUSINESS INTERRUPTION) HOWEVER CAUSED AND ON ANY THEORY OF LIABILITY, WHETHER IN CONTRACT, STRICT LIABILITY, OR TORT (INCLUDING NEGLIGENCE OR OTHERWISE) ARISING IN ANY WAY OUT OF THE USE OF THIS SOFTWARE, EVEN IF ADVISED OF THE POSSIBILITY OF SUCH DAMAGE.

NetApp reserves the right to change any products described herein at any time, and without notice. NetApp assumes no responsibility or liability arising from the use of products described herein, except as expressly agreed to in writing by NetApp. The use or purchase of this product does not convey a license under any patent rights, trademark rights, or any other intellectual property rights of NetApp.

The product described in this manual may be protected by one or more U.S. patents, foreign patents, or pending applications.

LIMITED RIGHTS LEGEND: Use, duplication, or disclosure by the government is subject to restrictions as set forth in subparagraph (b)(3) of the Rights in Technical Data -Noncommercial Items at DFARS 252.227-7013 (FEB 2014) and FAR 52.227-19 (DEC 2007).

Data contained herein pertains to a commercial product and/or commercial service (as defined in FAR 2.101) and is proprietary to NetApp, Inc. All NetApp technical data and computer software provided under this Agreement is commercial in nature and developed solely at private expense. The U.S. Government has a non-exclusive, non-transferrable, nonsublicensable, worldwide, limited irrevocable license to use the Data only in connection with and in support of the U.S. Government contract under which the Data was delivered. Except as provided herein, the Data may not be used, disclosed, reproduced, modified, performed, or displayed without the prior written approval of NetApp, Inc. United States Government license rights for the Department of Defense are limited to those rights identified in DFARS clause 252.227-7015(b) (FEB 2014).

Trademark information

NETAPP, the NETAPP logo, and the marks listed at http://www.netapp.com/TM are trademarks of NetApp, Inc. Other company and product names may be trademarks of their respective owners.