FC-to-SAS bridge maintenance

ONTAP MetroCluster

NetApp
March 22, 2024

This PDF was generated from https://docs.netapp.com/us-en/ontap-metrocluster/maintain/concept_using_fibrebridge_7600n_bridges_in_mcc_configurations.html on March 22, 2024. Always check docs.netapp.com for the latest.

Table of Contents

FC-to-SAS bridge maintenance . . . 1
Support for FibreBridge 7600N bridges in MetroCluster configurations . . . 1
Support for FibreBridge 7500N bridges in MetroCluster configurations . . . 1
Enabling IP port access on the FibreBridge 7600N bridge if necessary . . . 2
Updating firmware on a FibreBridge bridge . . . 4
Replacing a single FC-to-SAS bridge . . . 11
Replacing a pair of FibreBridge 6500N bridges with 7600N or 7500N bridges . . . 37
Requirements for using other interfaces to configure and manage FibreBridge bridges . . . 58
Hot-replacing a failed power supply module . . . 59
In-band management of the FC-to-SAS bridges . . . 59
Securing or unsecuring the FibreBridge bridge . . . 60

FC-to-SAS bridge maintenance

Support for FibreBridge 7600N bridges in MetroCluster configurations

The FibreBridge 7600N bridge is supported on ONTAP 9.5 and later as a replacement for the FibreBridge 7500N or 6500N bridge or when adding new storage to the MetroCluster configuration. The zoning requirements and restrictions regarding use of the bridge's FC ports are the same as that of the FibreBridge 7500N bridge.

NetApp Interoperability Matrix Tool

FibreBridge 6500N bridges are not supported in configurations running ONTAP 9.8 and later.

Use case	Zoning changes needed?	Restrictions	Procedure
Replacing a single FibreBridge 7500N bridge with a single FibreBridge 7600N bridge	No	The FibreBridge 7600N bridge must be configured exactly the same as the FibreBridge 7500N bridge.	Hot-swapping a FibreBridge 7500N with a 7600N bridge
Replacing a single FibreBridge 6500N bridge with a single FibreBridge 7600N bridge	No	The FibreBridge 7600N bridge must be configured exactly the same as the FibreBridge 6500N bridge.	Hot-swapping a FibreBridge 6500N bridge with a FibreBridge 7600N or 7500N bridge
Adding new storage through adding a new pair of FibreBridge 7600N bridges	Yes You must add storage zones for each of the FC ports of the new bridges.	You must have available ports on the FC switch fabric (in a fabric-attached MetroCluster configuration) or on the storage controllers (in a stretch MetroCluster configuration).Each pair of FibreBridge 7500N or 7600N bridges can support up to four stacks.	Hot-adding a stack of SAS disk shelves and bridges to a MetroCluster system

Support for FibreBridge 7500N bridges in MetroCluster configurations

The FibreBridge 7500N bridge is supported as a replacement for the FibreBridge 6500N bridge or for when adding new storage to the MetroCluster configuration. The supported configurations have zoning requirements and restrictions regarding use of the bridge's FC ports and stack and storage shelf limits.

FibreBridge 6500N bridges are not supported in configurations running ONTAP 9.8 and later.

Use case	Zoning changes needed?	Restrictions	Procedure
Replacing a single FibreBridge 6500N bridge with a single FibreBridge 7500N bridge	No	The FibreBridge 7500N bridge must be configured exactly the same as the FibreBridge 6500N bridge, using a single FC port and attaching to a single stack. The second FC port on the FibreBridge 7500N must not be used.	Hot-swapping a FibreBridge 6500N bridge with a FibreBridge 7600N or 7500N bridge
Consolidating multiple stacks by replacing multiple pairs of FibreBridge 6500N bridges with a single pair of FibreBridge 7500N bridges	Yes	In this case, you take the FibreBridge 6500N bridges out of service and replace them with a single pair of FibreBridge 7500N bridges.Each pair of FibreBridge 7500N or 7600N bridges can support up to four stacks. At the end of the procedure, both the top and bottom of the stacks must be connected to corresponding ports on the FibreBridge 7500N bridges.	Replacing a pair of FibreBridge 6500N bridges with 7600N or 7500N bridges
Adding new storage through adding a new pair of FibreBridge 7500N bridges	Yes You must add storage zones for each of the FC ports of the new bridges.	You must have available ports on the FC switch fabric (in a fabric-attached MetroCluster configuration) or on the storage controllers (in a stretch MetroCluster configuration).Each pair of FibreBridge 7500N or 7600N bridges can support up to four stacks.	Hot-adding a stack of SAS disk shelves and bridges to a MetroCluster system

Enabling IP port access on the FibreBridge 7600N bridge if necessary

If you are using an ONTAP version prior to 9.5, or otherwise plan to use out-of-band access to the FibreBridge 7600N bridge using telnet or other IP port protocols and services (FTP, ExpressNAV, ICMP, or QuickNAV), you can enable the access services via the console port.

Unlike the ATTO FibreBridge 7500N and 6500N bridges, the FibreBridge 7600N bridge is shipped with all IP port protocols and services disabled.

Beginning with ONTAP 9.5, *in-band management* of the bridges is supported. This means the bridges can be configured and monitored from the ONTAP CLI via the FC connection to the bridge. Physical access to the bridge via the bridge Ethernet ports is not required and the bridge user interfaces are not required.

Beginning with ONTAP 9.8, *in-band management* of the bridges is supported by default and out-of-band SNMP management is deprecated.

This task is required if you are **not** using in-band management to manage the bridges. In this case, you need to configure the bridge via the Ethernet management port.

Steps

1. Access the bridge's console interface by connecting a serial cable to the serial port on the FibreBridge 7600N bridge.
2. Using the console, enable the access services, and then save the configuration:

   `set closeport none`

   `saveconfiguration`

   The `set closeport none` command enables all access services on the bridge.

3. Disable a service, if desired, by issuing the `set closeport` and repeating the command as necessary until all desired services are disabled:

   `set closeport` *`service`*

   The `set closeport` command disables a single service at a time.

   `service` can specify one of the following:

   - expressnav
   - ftp
   - icmp
   - quicknav
   - snmp
   - telnet

   You can check whether a specific protocol is enabled or disabled by using the `get closeport` command.

4. If you are enabling SNMP, you must also issue the set SNMP enabled command:

   `set SNMP enabled`

   SNMP is the only protocol that requires a separate enable command.

5. Save the configuration:

   `saveconfiguration`

Updating firmware on a FibreBridge bridge

The procedure for updating the bridge firmware depends on your bridge model and ONTAP version.

Updating firmware on FibreBridge 7600N or 7500N bridges on configurations running ONTAP 9.4 and later

You might need to update the firmware on your FibreBridge bridges to ensure that you have the latest features or to resolve possible issues. This procedure should be used for FibreBridge 7600N or 7500N bridges on configurations running ONTAP 9.4 and later.

- The MetroCluster configuration must be operating normally.
- All of the FibreBridge bridges in the MetroCluster configuration must be up and operating.
- All of the storage paths must be available.
- You need the admin password and access to an HTTP, FTP, SFTP, or Trivial File Transfer Protocol (TFTP) server.
- You must be using a supported firmware version.

  NetApp Interoperability Matrix Tool

  In the IMT, you can use the Storage Solution field to select your MetroCluster solution. You use the **Component Explorer** to select the components and ONTAP version to refine your search. You can click **Show Results** to display the list of supported configurations that match the criteria.

- You can use this task only on FibreBridge 7600N or 7500N bridges in configurations running ONTAP 9.4 or later.
- You must perform this task on each FibreBridge bridge in the MetroCluster configuration, so that all of the bridges are running the same firmware version.

> This procedure is nondisruptive and takes approximately 30 minutes to complete.

> Beginning with ONTAP 9.8, the `storage bridge` command is replaced with `system bridge`. The following steps show the `storage bridge` command, but if you are running ONTAP 9.8 or later, the `system bridge` command is preferred.

Steps

1. Invoke an AutoSupport message indicating the start of the maintenance:

   `system node autosupport invoke -node * -type all -message MAINT=`*`maintenance-window-in-hours`*

   “maintenance-window-in-hours” specifies the length of the maintenance window, with a maximum of 72 hours. If the maintenance is completed before the time has elapsed, you can invoke an AutoSupport message indicating the end of the maintenance period:

   `system node autosupport invoke -node * -type all -message MAINT=end`

2. Go to the ATTO FibreBridge page and select the appropriate firmware for your bridge.

ATTO FibreBridge Firmware Download Page

3. Review the Caution/MustRead and End User Agreement, and click the check box to indicate acceptance and proceed.
4. Place the firmware file in a network location that is network accessible to the controller modules.

   You can enter the commands in the remaining steps from the console of either controller module.

5. Change to the advanced privilege level:

   ```
   set -privilege advanced
   ```

   You must respond with “y” when prompted to continue into advanced mode and see the advanced mode prompt (*>).

6. Update the bridge firmware:

   ```
   storage bridge firmware update -bridge name -uri URL-of-firmware-package
   ```

   ```
   cluster_A> storage bridge firmware update -bridge bridge_A_1a -uri
   http://192.168.132.97/firmware.ZBD
   ```

7. Return to the admin privilege level:

   ```
   set -privilege admin
   ```

8. Verify that the firmware upgrade is complete:

   ```
   job show -name "job-name"
   ```

   The following example shows that the job “storage bridge firmware update” is still running:

   ```
   cluster_A> job show -name "storage bridge firmware update"
   Owning

   Job ID Name                 Vserver    Node           State
   ------ -------------------- ---------- -------------- ----------
   2246   job-name
                               cluster_A
                                          node_A_1
                                                         Running
   Description: Storage bridge firmware update job
   ```

   After approximately 10 minutes, the new firmware is fully installed and the job state will be Success:

```
cluster_A> job show -name "storage bridge firmware update"

                            Owning
Job ID Name                 Vserver    Node           State
------ -------------------- ---------- -------------- ----------
2246   Storage bridge firmware update
                            cluster_A
                                       node_A_1
                                                      Success
Description: Storage bridge firmware update job
```

9. Complete the steps according to whether in-band management is enabled and which version of ONTAP your system is running:

   - If you are running ONTAP 9.4, in-band management is not supported and the command must be issued from the bridge console:

     i. Run the `flashimages` command on the console of the bridge and confirm that the correct firmware versions are displayed.

     > The example shows that primary flash image shows the new firmware image, while the secondary flash image shows the old image.

```
flashimages

 ;Type Version
;=====================================================
Primary 3.16 001H
Secondary 3.15 002S
Ready.
```

     i. Reboot the bridge by running the `firmwarerestart` command from the bridge.

     - If you are running ONTAP 9.5 or later, in-band management is supported and the command can be issued from the cluster prompt:

     ii. Run the `storage bridge run-cli -name` *`bridge-name`* `-command FlashImages` command.

     > The example shows that primary flash image shows the new firmware image, while the secondary flash image shows the old image.

```
cluster_A> storage bridge run-cli -name ATTO_7500N_IB_1 -command
FlashImages

[Job 2257]

;Type         Version
;=====================================================
Primary 3.16 001H
Secondary 3.15 002S
Ready.


[Job 2257] Job succeeded.
```

iii. If necessary, restart the bridge:

```
storage bridge run-cli -name ATTO_7500N_IB_1 -command FirmwareRestart
```

> Beginning with ATTO firmware version 2.95 the bridge will restart automatically and this step is not required.

10. Verify that the bridge restarted correctly:

```
sysconfig
```

The system should be cabled for multipath high availability (both controllers have access through the bridges to the disk shelves in each stack).

```
cluster_A> node run -node cluster_A-01 -command sysconfig
NetApp Release 9.6P8: Sat May 23 16:20:55 EDT 2020
System ID: 1234567890 (cluster_A-01); partner ID: 0123456789 (cluster_A-
02)
System Serial Number: 200012345678 (cluster_A-01)
System Rev: A4
System Storage Configuration: Quad-Path HA
```

11. Verify that the FibreBridge firmware was updated:

```
storage bridge show -fields fw-version,symbolic-name
```

```
cluster_A> storage bridge show -fields fw-version,symbolic-name
name fw-version symbolic-name
----------------- ----------------- -------------
ATTO_20000010affeaffe 3.10 A06X bridge_A_1a
ATTO_20000010affeffae 3.10 A06X bridge_A_1b
ATTO_20000010affeafff 3.10 A06X bridge_A_2a
ATTO_20000010affeaffa 3.10 A06X bridge_A_2b
4 entries were displayed.
```

12. Verify the partitions are updated from the bridge's prompt:

    ```
    flashimages
    ```

    The primary flash image displays the new firmware image, while the secondary flash image displays the old image.

    ```
    Ready.
    flashimages

    ;Type         Version
    ;=====================================================
       Primary    3.16 001H
     Secondary    3.15 002S

     Ready.
    ```

13. Repeat steps 5 to 10 to ensure that both flash images are updated to the same version.
14. Verify that both flash images are updated to the same version.

    ```
    flashimages
    ```

    The output should show the same version for both partitions.

    ```
    Ready.
    flashimages

    ;Type         Version
    ;=====================================================
       Primary    3.16 001H
     Secondary    3.16 001H

     Ready.
    ```

15. Repeat steps 5 to 13 on the next bridge until all of the bridges in the MetroCluster configuration have been updated.

Updating firmware on FibreBridge 7500N on configurations running ONTAP 9.3.x and earlier or 6500N bridges

You might need to update the firmware on your FibreBridge bridges to ensure that you have the latest features or to resolve possible issues. This procedure should be used for FibreBridge 7500N on configurations running ONTAP 9.3.x or for FibreBridge 6500N bridges on all supported versions of ONTAP.

Before you begin

- The MetroCluster configuration must be operating normally.
- All of the FibreBridge bridges in the MetroCluster configuration must be up and operating.
- All of the storage paths must be available.
- You need the admin password and access to an FTP or SCP server.
- You must be using a supported firmware version.

  NetApp Interoperability Matrix Tool

  In the IMT, you can use the Storage Solution field to select your MetroCluster solution. You use the **Component Explorer** to select the components and ONTAP version to refine your search. You can click **Show Results** to display the list of supported configurations that match the criteria.

You can use this task with either FibreBridge 7500N or 6500N bridges. Beginning with ONTAP 9.3, you can use the ONTAP storage bridge firmware update command to update bridge firmware on FibreBridge 7500N bridges.

Updating firmware on FibreBridge 7600N or 7500N bridges on configurations running ONTAP 9.4 and later

You must perform this task on each FibreBridge bridge in the MetroCluster configuration, so that all of the bridges are running the same firmware version.

> This procedure is nondisruptive and takes approximately 30 minutes to complete.

Steps

1. Invoke an AutoSupport message indicating the start of the maintenance:

   ```
   system node autosupport invoke -node * -type all -message MAINT=maintenance-window-in-hours
   ```

   "_maintenance-window-in-hours_" specifies the length of the maintenance window, with a maximum of 72 hours. If the maintenance is completed before the time has elapsed, you can invoke an AutoSupport message indicating the end of the maintenance period:

   ```
   system node autosupport invoke -node * -type all -message MAINT=end
   ```

2. Go to the ATTO FibreBridge page and select the appropriate firmware for your bridge.

   ATTO FibreBridge Firmware Download Page

3. Review the Caution/MustRead and End User Agreement, and click the check box to indicate acceptance and proceed.
4. Download the bridge firmware file using Steps 1 through 3 of the procedure on the ATTO FibreBridge Firmware Download page.

5. Make a copy of the ATTO FibreBridge Firmware Download page and release notes for reference when you are instructed to update the firmware on each bridge.
6. Update the bridge:
   a. Install the firmware on the FibreBridge bridge.
      - If you are using ATTO FibreBridge 7500N bridges, you should refer to the instructions provided in the “Update Firmware” section of the *ATTO FibreBridge 7500N Installation and Operation Manual*.
      - If you are using ATTO FibreBridge 6500N bridges, you should refer to the instructions provided in the “Update Firmware” section of the *ATTO FibreBridge 6500N Installation and Operation Manual*.

        ATTENTION: Make sure that you power-cycle the individual bridge now. If you wait and power-cycle both bridges in a stack simultaneously, the controller might lose access to the drives, resulting in a plex failure or multidisk panic.

        The bridge should restart.

   b. From the console of either controller, verify that the bridge restarted correctly:

      ```
      sysconfig
      ```

      The system should be cabled for multipath high availability (both controllers have access through the bridges to the disk shelves in each stack).

      ```
      cluster_A::> node run -node cluster_A-01 -command sysconfig
      NetApp Release 9.1P7: Sun Aug 13 22:33:49 PDT 2017
      System ID: 1234567890 (cluster_A-01); partner ID: 0123456789
      (cluster_A-02)
      System Serial Number: 200012345678 (cluster_A-01)
      System Rev: A4
      System Storage Configuration: Quad-Path HA
      ```

   c. From the console of either controller, verify that the FibreBridge firmware was updated:

      ```
      storage bridge show -fields fw-version,symbolic-name
      ```

      ```
      cluster_A::> storage bridge show -fields fw-version,symbolic-name
       name              fw-version        symbolic-name
       ----------------- ----------------- -------------
       ATTO_10.0.0.1     1.63 071C 51.01   bridge_A_1a
       ATTO_10.0.0.2     1.63 071C 51.01   bridge_A_1b
       ATTO_10.0.1.1     1.63 071C 51.01   bridge_B_1a
       ATTO_10.0.1.2     1.63 071C 51.01   bridge_B_1b
       4 entries were displayed.
      ```

   d. Repeat the previous substeps on the same bridge to update the second partition.
   e. Verify that both partitions are updated:

```
flashimages
```

The output should show the same version for both partitions.

```
Ready.
flashimages
4
;Type         Version
;=====================================================
Primary    2.80 003T
Secondary    2.80 003T
Ready.
```

7. Repeat the previous step on the next bridge, until all of the bridges in the MetroCluster configuration have been updated.

Replacing a single FC-to-SAS bridge

You can nondisruptively replace a bridge with a same model bridge or with a new model bridge.

Before you begin

You need the admin password and access to an FTP or SCP server.

About this task

This procedure is nondisruptive and takes approximately 60 minutes to complete.

This procedure uses the bridge CLI to configure and manage a bridge, and to update the bridge firmware and the ATTO QuickNAV utility to configure the bridge Ethernet management 1 port. You can use other interfaces if they meet the requirements.

Requirements for using other interfaces to configure and manage FibreBridge bridges

Related information

Replacing a pair of FibreBridge 6500N bridges with 7600N or 7500N bridges

Verifying storage connectivity

Before replacing bridges, you should verify bridge and storage connectivity. Familiarizing yourself with the command output enables you to subsequently confirm connectivity after making configuration changes.

About this task

You can issue these commands from the admin prompt of any of the controller modules in the MetroCluster configuration at the site undergoing maintenance.

Steps

1. Confirm connectivity to the disks by entering the following command on any one of the MetroCluster nodes:

```
run local sysconfig -v
```

The output shows the disks attached to the initiator ports on the controller, and identifies the shelves connected to the FC-to-SAS bridges:

```
node_A_1> run local sysconfig -v
NetApp Release 9.3.2X18: Sun Dec 13 01:23:24 PST 2017
System ID: 4068741258 (node_A_1); partner ID: 4068741260 (node_B_1)
System Serial Number: 940001025471 (node_A_1)
System Rev: 70
System Storage Configuration: Multi-Path HA**<=== Configuration should
be multi-path HA**
.
.
.
slot 0: FC Host Adapter 0g (QLogic 8324 rev. 2, N-port, <UP>)**<===
Initiator port**
        Firmware rev:      7.5.0
        Flash rev:         0.0.0
        Host Port Id:      0x60130
        FC Node Name:      5:00a:098201:bae312
        FC Port Name:      5:00a:098201:bae312
        SFP Vendor:        UTILITIES CORP.
        SFP Part Number:   FTLF8529P3BCVAN1
        SFP Serial Number: URQ0Q9R
        SFP Capabilities:  4, 8 or 16 Gbit
        Link Data Rate:    16 Gbit
        Switch Port:       brcd6505-fcs40:1
  **<List of disks visible to port\>**
         ID     Vendor   Model            FW    Size
        brcd6505-fcs29:12.126L1527     : NETAPP   X302_HJUPI01TSSM NA04
847.5GB (1953525168 512B/sect)
        brcd6505-fcs29:12.126L1528     : NETAPP   X302_HJUPI01TSSA NA02
847.5GB (1953525168 512B/sect)
        .
        .
        .
        **<List of FC-to-SAS bridges visible to port\>**
        FC-to-SAS Bridge:
        brcd6505-fcs40:12.126L0        : ATTO     FibreBridge6500N 1.61
FB6500N102980
        brcd6505-fcs42:13.126L0        : ATTO     FibreBridge6500N 1.61
FB6500N102980
        brcd6505-fcs42:6.126L0         : ATTO     FibreBridge6500N 1.61
FB6500N101167
        brcd6505-fcs42:7.126L0         : ATTO     FibreBridge6500N 1.61
FB6500N102974
        .
```

```
        .
        .
  **<List of storage shelves visible to port\>**
        brcd6505-fcs40:12.shelf6: DS4243  Firmware rev. IOM3 A: 0200
IOM3 B: 0200
        brcd6505-fcs40:12.shelf8: DS4243  Firmware rev. IOM3 A: 0200
IOM3 B: 0200
        .
        .
        .
```

Hot-swapping a bridge with a replacement bridge of the same model

You can hot-swap a failed bridge with another bridge of the same model.

About this task

If you will be using in-band management of the bridge rather than IP management, the steps for configuring the Ethernet port and IP settings can be skipped, as noted in the relevant steps.

> Beginning with ONTAP 9.8, the `storage bridge` command is replaced with `system bridge`. The following steps show the `storage bridge` command, but if you are running ONTAP 9.8 or later, the `system bridge` command is preferred.

Steps

1. If the old bridge is accessible, you can retrieve the configuration information.

If…	Then…
You are using IP management	Connect to the old bridge with a Telnet connection and copy the output of the bridge configuration.

You are using in-band management	Use the ONTAP CLI to retrieve the configuration information with the following commands:
	
	`storage bridge run-cli -name` *`bridge-name`* `-command "info"`
	
	`storage bridge run-cli -name` *`bridge-name`* `-command "sasportlist"`

   a. Enter the command:

   `storage bridge run-cli -name bridge_A1 -command "info"`

   ```
   info

   Device Status          = Good
   ```

```
Unsaved Changes       = None
Device                = "FibreBridge 7500N"
Serial Number         = FB7500N100000
Device Version        = 3.10
Board Revision        = 7
Build Number          = 007A
Build Type            = Release
Build Date            = "Aug 20 2019" 11:01:24
Flash Revision        = 0.02
Firmware Version      = 3.10
BCE Version (FPGA 1)  = 15
BAU Version (FPGA 2)  = 33
User-defined name     = "bridgeA1"
World Wide Name       = 20 00 00 10 86 A1 C7 00
MB of RAM Installed   = 512
FC1 Node Name         = 20 00 00 10 86 A1 C7 00
FC1 Port Name         = 21 00 00 10 86 A1 C7 00
FC1 Data Rate         = 16Gb
FC1 Connection Mode   = ptp
FC1 FW Revision       = 11.4.337.0
FC2 Node Name         = 20 00 00 10 86 A1 C7 00
FC2 Port Name         = 22 00 00 10 86 A1 C7 00
FC2 Data Rate         = 16Gb
FC2 Connection Mode   = ptp
FC2 FW Revision       = 11.4.337.0
SAS FW Revision       = 3.09.52
MP1 IP Address        = 10.10.10.10
MP1 IP Subnet Mask    = 255.255.255.0
MP1 IP Gateway        = 10.10.10.1
MP1 IP DHCP           = disabled
MP1 MAC Address       = 00-10-86-A1-C7-00
MP2 IP Address        = 0.0.0.0 (disabled)
MP2 IP Subnet Mask    = 0.0.0.0
MP2 IP Gateway        = 0.0.0.0
MP2 IP DHCP           = enabled
MP2 MAC Address       = 00-10-86-A1-C7-01
SNMP                  = enabled
SNMP Community String = public
PS A Status           = Up
PS B Status           = Up
Active Configuration  = NetApp

Ready.
```

b. Enter the command:

```
storage bridge run-cli -name bridge_A1 -command "sasportlist"
```

```
SASPortList

;Connector      PHY     Link            Speed   SAS Address
;==============================================================
Device  A       1       Up              6Gb     5001086000a1c700
Device  A       2       Up              6Gb     5001086000a1c700
Device  A       3       Up              6Gb     5001086000a1c700
Device  A       4       Up              6Gb     5001086000a1c700
Device  B       1       Disabled        12Gb    5001086000a1c704
Device  B       2       Disabled        12Gb    5001086000a1c704
Device  B       3       Disabled        12Gb    5001086000a1c704
Device  B       4       Disabled        12Gb    5001086000a1c704
Device  C       1       Disabled        12Gb    5001086000a1c708
Device  C       2       Disabled        12Gb    5001086000a1c708
Device  C       3       Disabled        12Gb    5001086000a1c708
Device  C       4       Disabled        12Gb    5001086000a1c708
Device  D       1       Disabled        12Gb    5001086000a1c70c
Device  D       2       Disabled        12Gb    5001086000a1c70c
Device  D       3       Disabled        12Gb    5001086000a1c70c
Device  D       4       Disabled        12Gb    5001086000a1c70c
```

2. If the bridge is in a fabric-attached MetroCluster configuration, disable all of the switch ports that connect to the bridge FC port or ports.
3. From the ONTAP cluster prompt, remove the bridge undergoing maintenance from health monitoring:
   a. Remove the bridge:
      `storage bridge remove -name bridge-name`
   b. View the list of monitored bridges and confirm that the removed bridge is not present:
      `storage bridge show`
4. Properly ground yourself.
5. Power down the ATTO bridge.

If you are using a…	Then…
FibreBridge 7600N or 7500N bridge	Remove the power cables connected to the bridge.
FibreBridge 6500N bridge	Turn off the power switch of the bridge.

6. Disconnect the cables that are connected to the old bridge.

   You should make note of the port to which each cable was connected.

7. Remove the old bridge from the rack.
8. Install the new bridge into the rack.

9. Reconnect the power cord and, if configuring for IP access to the bridge, a shielded Ethernet cable.

   > You must not reconnect the SAS or FC cables at this time.

10. Connect the bridge to a power source, and then turn it on.

    The bridge Ready LED might take up to 30 seconds to illuminate, indicating that the bridge has completed its power-on self test sequence.

11. If configuring for in-band management, connect a cable from FibreBridge RS-232 serial port to the serial (COM) port on a personal computer.

    The serial connection will be used for initial configuration, and then in-band management via ONTAP and the FC ports can be used to monitor and manage the bridge.

12. If configuring for IP management, configure the Ethernet management 1 port for each bridge by following the procedure in section 2.0 of the *ATTO FibreBridge Installation and Operation Manual* for your bridge model.

    In systems running ONTAP 9.5 or later, in-band management can be used to access the bridge via the FC ports rather than the Ethernet port. Beginning with ONTAP 9.8, only in-band management is supported and SNMP management is deprecated.

    When running QuickNAV to configure an Ethernet management port, only the Ethernet management port that is connected by the Ethernet cable is configured. For example, if you also wanted to configure the Ethernet management 2 port, you would need to connect the Ethernet cable to port 2 and run QuickNAV.

13. Configure the bridge.

    If you retrieved the configuration information from the old bridge, use the information to configure the new bridge.

    Be sure to make note of the user name and password that you designate.

    The *ATTO FibreBridge Installation and Operation Manual* for your bridge model has the most current information on available commands and how to use them.

    > Do not configure time synchronization on ATTO FibreBridge 7600N or 7500N. The time synchronization for ATTO FibreBridge 7600N or 7500N is set to the cluster time after the bridge is discovered by ONTAP. It is also synchronized periodically once a day. The time zone used is GMT and is not changeable.

    a. If configuring for IP management, configure the IP settings of the bridge.

       To set the IP address without the QuickNAV utility, you need to have a serial connection to the FibreBridge.

       If using the CLI, you must run the following commands:

       ```
       set ipaddress mp1 _ip-address
       ```

       ```
       set ipsubnetmask mp1 subnet-mask
       ```

       ```
       set ipgateway mp1 x.x.x.x
       ```

```
set ipdhcp mp1 disabled

set ethernetspeed mp1 1000
```

b. Configure the bridge name.

The bridges should each have a unique name within the MetroCluster configuration.

Example bridge names for one stack group on each site:

- bridge_A_1a
- bridge_A_1b
- bridge_B_1a
- bridge_B_1b

If using the CLI, you must run the following command:

```
set bridgename bridgename
```

c. If running ONTAP 9.4 or earlier, enable SNMP on the bridge:

```
set SNMP enabled
```

In systems running ONTAP 9.5 or later, in-band management can be used to access the bridge via the FC ports rather than the Ethernet port. Beginning with ONTAP 9.8, only in-band management is supported and SNMP management is deprecated.

14. Configure the bridge FC ports.

a. Configure the data rate/speed of the bridge FC ports.

The supported FC data rate depends on your model bridge.

- The FibreBridge 7600 bridge supports up to 32, 16, or 8 Gbps.
- The FibreBridge 7500 bridge supports up to 16, 8, or 4 Gbps.
- The FibreBridge 6500 bridge supports up to 8, 4, or 2 Gbps.

> The FCDataRate speed you select is limited to the maximum speed supported by both the bridge and the switch to which the bridge port connects. Cabling distances must not exceed the limitations of the SFPs and other hardware.

If using the CLI, you must run the following command:

```
set FCDataRate port-number port-speed
```

b. If you are configuring a FibreBridge 7500N or 6500N bridge, configure the connection mode that the port uses to ptp.

> The FCConnMode setting is not required when configuring a FibreBridge 7600N bridge.

If using the CLI, you must run the following command:

```
set FCConnMode port-number ptp
```

c. If you are configuring a FibreBridge 7600N or 7500N bridge, you must configure or disable the FC2 port.
   - If you are using the second port, you must repeat the previous substeps for the FC2 port.
   - If you are not using the second port, then you must disable the port:

     ```
     FCPortDisable port-number
     ```

d. If you are configuring a FibreBridge 7600N or 7500N bridge, disable the unused SAS ports:

   ```
   SASPortDisable sas-port
   ```

   > SAS ports A through D are enabled by default. You must disable the SAS ports that are not being used. If only SAS port A is used, then SAS ports B, C, and D must be disabled.

15. Secure access to the bridge and save the bridge's configuration.

    a. From the controller prompt check the status of the bridges: `storage bridge show`

       The output shows which bridge is not secured.

    b. Check the status of the unsecured bridge's ports:

       ```
       info
       ```

       The output shows the status of Ethernet ports MP1 and MP2.

    c. If Ethernet port MP1 is enabled, run the following command:

       ```
       set EthernetPort mp1 disabled
       ```

       > If Ethernet port MP2 is also enabled, repeat the previous substep for port MP2.

    d. Save the bridge's configuration.

       You must run the following commands:

       ```
       SaveConfiguration
       ```

       ```
       FirmwareRestart
       ```

       You are prompted to restart the bridge.

16. Update the FibreBridge firmware on each bridge.

    If the new bridge is the same type as the partner bridge upgrade to the same firmware as the partner bridge. If the new bridge is a different type to the partner bridge, upgrade to the latest firmware supported by the bridge and version of ONTAP. See the section "Updating firmware on a FibreBridge bridge" in *MetroCluster Maintenance*.

17. Reconnect the SAS and FC cables to the same ports on the new bridge.

If the new bridge is a FibreBridge 7600N or 7500N, you must replace the cables connecting the bridge to the top or bottom of the shelf stack. The FibreBridge 6500N bridge used SAS cables; the FibreBridge 7600N and 7500N bridges require mini-SAS cables for these connections.

> Wait at least 10 seconds before connecting the port. The SAS cable connectors are keyed; when oriented correctly into a SAS port, the connector clicks into place and the disk shelf SAS port LNK LED illuminates green. For disk shelves, you insert a SAS cable connector with the pull tab oriented down (on the underside of the connector). For controllers, the orientation of SAS ports can vary depending on the platform model; therefore, the correct orientation of the SAS cable connector varies.

18. Verify that each bridge can see all of the disk drives and disk shelves to which the bridge is connected.

If you are using the…	Then…
ATTO ExpressNAV GUI	a. In a supported web browser, enter the IP address of the bridge in the browser box. You are brought to the ATTO FibreBridge homepage, which has a link. b. Click the link, and then enter your user name and the password that you designated when you configured the bridge. The ATTO FibreBridge status page appears with a menu to the left. c. Click **Advanced** in the menu. d. View the connected devices: `sastargets` e. Click **Submit**.
Serial port connection	View the connected devices: `sastargets`

The output shows the devices (disks and disk shelves) to which the bridge is connected. The output lines are sequentially numbered so that you can quickly count the devices.

> If the text response truncated appears at the beginning of the output, you can use Telnet to connect to the bridge, and then view all of the output by using the `sastargets` command.

The following output shows that 10 disks are connected:

```
Tgt VendorID ProductID        Type SerialNumber
  0 NETAPP   X410_S15K6288A15 DISK 3QP1CLE300009940UHJV
  1 NETAPP   X410_S15K6288A15 DISK 3QP1ELF600009940V1BV
  2 NETAPP   X410_S15K6288A15 DISK 3QP1G3EW00009940U2M0
  3 NETAPP   X410_S15K6288A15 DISK 3QP1EWMP00009940U1X5
  4 NETAPP   X410_S15K6288A15 DISK 3QP1FZLE00009940G8YU
  5 NETAPP   X410_S15K6288A15 DISK 3QP1FZLF00009940TZKZ
  6 NETAPP   X410_S15K6288A15 DISK 3QP1CEB400009939MGXL
  7 NETAPP   X410_S15K6288A15 DISK 3QP1G7A900009939FNTT
  8 NETAPP   X410_S15K6288A15 DISK 3QP1FY0T00009940G8PA
  9 NETAPP   X410_S15K6288A15 DISK 3QP1FXW600009940VERQ
```

19. Verify that the command output shows that the bridge is connected to all of the appropriate disks and disk shelves in the stack.

If the output is…	Then…
Correct	Repeat Step 18 for each remaining bridge.
Not correct	a. Check for loose SAS cables or correct the SAS cabling by repeating Step 17. b. Repeat Step 18.

20. If the bridge is in a fabric-attached MetroCluster configuration, re-enable the FC switch port that you disabled at the beginning of this procedure.

    This should be the port that connects to the bridge.

21. From the system console of both controller modules, verify that all of the controller modules have access through the new bridge to the disk shelves (that is, that the system is cabled for Multipath HA):

    ```
    run local sysconfig
    ```

    It might take up to a minute for the system to complete discovery.

    If the output does not indicate Multipath HA, you must correct the SAS and FC cabling because not all of the disk drives are accessible through the new bridge.

    The following output states that the system is cabled for Multipath HA:

```
NetApp Release 8.3.2: Tue Jan 26 01:41:49 PDT 2016
System ID: 1231231231 (node_A_1); partner ID: 4564564564 (node_A_2)
System Serial Number: 700000123123 (node_A_1); partner Serial Number:
700000456456 (node_A_2)
System Rev: B0
System Storage Configuration: Multi-Path HA
System ACP Connectivity: NA
```

When the system is not cabled as Multipath HA, restarting a bridge might cause loss of access to the disk drives and result in a multi-disk panic.

22. If running ONTAP 9.4 or earlier, verify that the bridge is configured for SNMP.

    If you are using the bridge CLI, run the following command:

    ```
    get snmp
    ```

23. From the ONTAP cluster prompt, add the bridge to health monitoring:
    a. Add the bridge, using the command for your version of ONTAP:

ONTAP version	Command
9.5 and later	`storage bridge add -address 0.0.0.0 -managed-by in-band -name` *`bridge-name`*
9.4 and earlier	`storage bridge add -address` *`bridge-ip-address`* `-name` *`bridge-name`*

    b. Verify that the bridge has been added and is properly configured:

    ```
    storage bridge show
    ```

    It might take as long as 15 minutes to reflect all data because of the polling interval. The ONTAP health monitor can contact and monitor the bridge if the value in the “Status” column is “ok”, and other information, such as the worldwide name (WWN), is displayed.

    The following example shows that the FC-to-SAS bridges are configured:

```
controller_A_1::> storage bridge show

Bridge              Symbolic Name Is Monitored  Monitor Status
Vendor Model                Bridge WWN
------------------  ------------- ------------  --------------
------ -----------------    ----------
ATTO_10.10.20.10  atto01        true          ok              Atto
FibreBridge 7500N      20000010867038c0
ATTO_10.10.20.11  atto02        true          ok              Atto
FibreBridge 7500N      20000010867033c0
ATTO_10.10.20.12  atto03        true          ok              Atto
FibreBridge 7500N      20000010867030c0
ATTO_10.10.20.13  atto04        true          ok              Atto
FibreBridge 7500N      2000001086703b80

4 entries were displayed

 controller_A_1::>
```

24. Verify the operation of the MetroCluster configuration in ONTAP:
    a. Check whether the system is multipathed:
       `node run -node node-name sysconfig -a`
    b. Check for any health alerts on both clusters:
       `system health alert show`
    c. Confirm the MetroCluster configuration and that the operational mode is normal:
       `metrocluster show`
    d. Perform a MetroCluster check:
       `metrocluster check run`
    e. Display the results of the MetroCluster check:
       `metrocluster check show`
    f. Check for any health alerts on the switches (if present):
       `storage switch show`
    g. Run Config Advisor.

       NetApp Downloads: Config Advisor

    h. After running Config Advisor, review the tool's output and follow the recommendations in the output to address any issues discovered.

Related information

In-band management of the FC-to-SAS bridges

Hot-swapping a FibreBridge 7500N with a 7600N bridge

You can hot-swap a FibreBridge 7500N bridge with a 7600N bridge.

About this task

If you will be using in-band management of the bridge rather than IP management, the steps for configuring the Ethernet port and IP settings can be skipped, as noted in the relevant steps.

> Beginning with ONTAP 9.8, the `storage bridge` command is replaced with `system bridge`. The following steps show the `storage bridge` command, but if you are running ONTAP 9.8 or later, the `system bridge` command is preferred.

Steps

1. If the bridge is in a fabric-attached MetroCluster configuration, disable all of the switch ports that connect to the bridge FC port or ports.
2. From the ONTAP cluster prompt, remove the bridge undergoing maintenance from health monitoring:
   a. Remove the bridge:
      `storage bridge remove -name` *`bridge-name`*
   b. View the list of monitored bridges and confirm that the removed bridge is not present:
      `storage bridge show`
3. Properly ground yourself.
4. Remove the power cables connected to the bridge to power down the bridge.
5. Disconnect the cables that are connected to the old bridge.

   You should make note of the port to which each cable was connected.
6. Remove the old bridge from the rack.
7. Install the new bridge into the rack.
8. Reconnect the power cord and shielded Ethernet cable.

   > You must not reconnect the SAS or FC cables at this time.
9. Connect the bridge to a power source, and then turn it on.

   The bridge Ready LED might take up to 30 seconds to illuminate, indicating that the bridge has completed its power-on self test sequence.
10. If configuring for in-band management, connect a cable from FibreBridge RS-232 serial port to the serial (COM) port on a personal computer.

    The serial connection will be used for initial configuration, and then in-band management via ONTAP and the FC ports can be used to monitor and manage the bridge.
11. If configuring for in-band management, connect a cable from FibreBridge RS-232 serial port to the serial (COM) port on a personal computer.

    The serial connection will be used for initial configuration, and then in-band management via ONTAP and the FC ports can be used to monitor and manage the bridge.

12. If configuring for IP management, configure the Ethernet management 1 port for each bridge by following the procedure in section 2.0 of the *ATTO FibreBridge Installation and Operation Manual* for your bridge model.

    In systems running ONTAP 9.5 or later, in-band management can be used to access the bridge via the FC ports rather than the Ethernet port. Beginning with ONTAP 9.8, only in-band management is supported and SNMP management is deprecated.

    When running QuickNAV to configure an Ethernet management port, only the Ethernet management port that is connected by the Ethernet cable is configured. For example, if you also wanted to configure the Ethernet management 2 port, you would need to connect the Ethernet cable to port 2 and run QuickNAV.

13. Configure the bridges.

    Be sure to make note of the user name and password that you designate.

    The *ATTO FibreBridge Installation and Operation Manual* for your bridge model has the most current information on available commands and how to use them.

    > Do not configure time synchronization on FibreBridge 7600N. The time synchronization for FibreBridge 7600N is set to the cluster time after the bridge is discovered by ONTAP. It is also synchronized periodically once a day. The time zone used is GMT and is not changeable.

    a. If configuring for IP management, configure the IP settings of the bridge.

       To set the IP address without the QuickNAV utility, you need to have a serial connection to the FibreBridge.

       If using the CLI, you must run the following commands:

       ```
       set ipaddress mp1 ip-address

       set ipsubnetmask mp1 subnet-mask

       set ipgateway mp1 x.x.x.x

       set ipdhcp mp1 disabled

       set ethernetspeed mp1 1000
       ```

    b. Configure the bridge name.

       The bridges should each have a unique name within the MetroCluster configuration.

       Example bridge names for one stack group on each site:

       - bridge_A_1a
       - bridge_A_1b
       - bridge_B_1a
       - bridge_B_1b

       If using the CLI, you must run the following command:

```
set bridgename bridgename
```

c. If running ONTAP 9.4 or earlier, enable SNMP on the bridge:
```
set SNMP enabled
```

In systems running ONTAP 9.5 or later, in-band management can be used to access the bridge via the FC ports rather than the Ethernet port. Beginning with ONTAP 9.8, only in-band management is supported and SNMP management is deprecated.

14. Configure the bridge FC ports.

a. Configure the data rate/speed of the bridge FC ports.

The supported FC data rate depends on your model bridge.

- The FibreBridge 7600 bridge supports up to 32, 16, or 8 Gbps.
- The FibreBridge 7500 bridge supports up to 16, 8, or 4 Gbps.
- The FibreBridge 6500 bridge supports up to 8, 4, or 2 Gbps.

> The FCDataRate speed you select is limited to the maximum speed supported by both the bridge and the FC port of the controller module or switch to which the bridge port connects. Cabling distances must not exceed the limitations of the SFPs and other hardware.

If using the CLI, you must run the following command:

```
set FCDataRate port-number port-speed
```

b. You must configure or disable the FC2 port.

- If you are using the second port, you must repeat the previous substeps for the FC2 port.
- If you are not using the second port, then you must disable the unused port:

```
FCPortDisable port-number
```

The following example shows the disabling of FC port 2:

```
FCPortDisable 2

Fibre Channel Port 2 has been disabled.
```

c. Disable the unused SAS ports:

```
SASPortDisable sas-port
```

> SAS ports A through D are enabled by default. You must disable the SAS ports that are not being used.

If only SAS port A is used, then SAS ports B, C, and D must be disabled. The following example shows disabling of SAS port B. You must similarly disable SAS ports C and D:

```
SASPortDisable b

SAS Port B has been disabled.
```

15. Secure access to the bridge and save the bridge's configuration.
    a. From the controller prompt check the status of the bridges:

       ```
       storage bridge show
       ```

       The output shows which bridge is not secured.

    b. Check the status of the unsecured bridge's ports:

       ```
       info
       ```

       The output shows the status of Ethernet ports MP1 and MP2.

    c. If Ethernet port MP1 is enabled, run the following command:

       ```
       set EthernetPort mp1 disabled
       ```

       > If Ethernet port MP2 is also enabled, repeat the previous substep for port MP2.

    d. Save the bridge's configuration.

       You must run the following commands:

       ```
       SaveConfiguration
       ```

       ```
       FirmwareRestart
       ```

       You are prompted to restart the bridge.

16. Update the FibreBridge firmware on each bridge.

    Updating firmware on FibreBridge 7600N or 7500N bridges on configurations running ONTAP 9.4 and later

17. Reconnect the SAS and FC cables to the same ports on the new bridge.

    > Wait at least 10 seconds before connecting the port. The SAS cable connectors are keyed; when oriented correctly into a SAS port, the connector clicks into place and the disk shelf SAS port LNK LED illuminates green. For disk shelves, you insert a SAS cable connector with the pull tab oriented down (on the underside of the connector). For controllers, the orientation of SAS ports can vary depending on the platform model; therefore, the correct orientation of the SAS cable connector varies.

18. Verify that each bridge can see all of the disk drives and disk shelves to which the bridge is connected:

    ```
    sastargets
    ```

    The output shows the devices (disks and disk shelves) to which the bridge is connected. The output lines

are sequentially numbered so that you can quickly count the devices.

The following output shows that 10 disks are connected:

```
Tgt VendorID ProductID        Type        SerialNumber
  0 NETAPP   X410_S15K6288A15 DISK        3QP1CLE300009940UHJV
  1 NETAPP   X410_S15K6288A15 DISK        3QP1ELF600009940V1BV
  2 NETAPP   X410_S15K6288A15 DISK        3QP1G3EW00009940U2M0
  3 NETAPP   X410_S15K6288A15 DISK        3QP1EWMP00009940U1X5
  4 NETAPP   X410_S15K6288A15 DISK        3QP1FZLE00009940G8YU
  5 NETAPP   X410_S15K6288A15 DISK        3QP1FZLF00009940TZKZ
  6 NETAPP   X410_S15K6288A15 DISK        3QP1CEB400009939MGXL
  7 NETAPP   X410_S15K6288A15 DISK        3QP1G7A900009939FNTT
  8 NETAPP   X410_S15K6288A15 DISK        3QP1FY0T00009940G8PA
  9 NETAPP   X410_S15K6288A15 DISK        3QP1FXW600009940VERQ
```

19. Verify that the command output shows that the bridge is connected to all of the appropriate disks and disk shelves in the stack.

If the output is…	Then…
Correct	Repeat the previous step for each remaining bridge.
Not correct	a. Check for loose SAS cables or correct the SAS cabling by repeating Step 17. b. Repeat the previous step.

20. If the bridge is in a fabric-attached MetroCluster configuration, reenable the FC switch port that you disabled at the beginning of this procedure.

    This should be the port that connects to the bridge.

21. From the system console of both controller modules, verify that all of the controller modules have access through the new bridge to the disk shelves (that is, that the system is cabled for Multipath HA):

    ```
    run local sysconfig
    ```

    It might take up to a minute for the system to complete discovery.

    If the output does not indicate Multipath HA, you must correct the SAS and FC cabling because not all of the disk drives are accessible through the new bridge.

    The following output states that the system is cabled for Multipath HA:

```
NetApp Release 8.3.2: Tue Jan 26 01:41:49 PDT 2016
System ID: 1231231231 (node_A_1); partner ID: 4564564564 (node_A_2)
System Serial Number: 700000123123 (node_A_1); partner Serial Number:
700000456456 (node_A_2)
System Rev: B0
System Storage Configuration: Multi-Path HA
System ACP Connectivity: NA
```

When the system is not cabled as Multipath HA, restarting a bridge might cause loss of access to the disk drives and result in a multi-disk panic.

22. If running ONTAP 9.4 or earlier, verify that the bridge is configured for SNMP.

    If you are using the bridge CLI, run the following command:

    `get snmp`

23. From the ONTAP cluster prompt, add the bridge to health monitoring:
    a. Add the bridge, using the command for your version of ONTAP:

ONTAP version	Command
9.5 and later	`storage bridge add -address 0.0.0.0 -managed-by in-band -name` *`bridge-name`*
9.4 and earlier	`storage bridge add -address` *`bridge-ip-address`* `-name` *`bridge-name`*

    b. Verify that the bridge has been added and is properly configured:

    `storage bridge show`

    It might take as long as 15 minutes to reflect all data because of the polling interval. The ONTAP health monitor can contact and monitor the bridge if the value in the “Status” column is “ok”, and other information, such as the worldwide name (WWN), is displayed.

    The following example shows that the FC-to-SAS bridges are configured:

```
controller_A_1::> storage bridge show

Bridge              Symbolic Name Is Monitored  Monitor Status
Vendor Model                Bridge WWN
------------------  ------------- ------------  --------------
------ -----------------    ----------
ATTO_10.10.20.10  atto01        true          ok              Atto
FibreBridge 7500N      20000010867038c0
ATTO_10.10.20.11  atto02        true          ok              Atto
FibreBridge 7500N      20000010867033c0
ATTO_10.10.20.12  atto03        true          ok              Atto
FibreBridge 7500N      20000010867030c0
ATTO_10.10.20.13  atto04        true          ok              Atto
FibreBridge 7500N      2000001086703b80

4 entries were displayed

 controller_A_1::>
```

24. Verify the operation of the MetroCluster configuration in ONTAP:
    a. Check whether the system is multipathed:
       `node run -node node-name sysconfig -a`
    b. Check for any health alerts on both clusters:
       `system health alert show`
    c. Confirm the MetroCluster configuration and that the operational mode is normal:
       `metrocluster show`
    d. Perform a MetroCluster check:
       `metrocluster check run`
    e. Display the results of the MetroCluster check:

       ```
       metrocluster check show
       ```

    f. Check for any health alerts on the switches (if present):
       `storage switch show`
    g. Run Config Advisor.

       NetApp Downloads: Config Advisor

    h. After running Config Advisor, review the tool's output and follow the recommendations in the output to address any issues discovered.

Related information

In-band management of the FC-to-SAS bridges

Hot-swapping a FibreBridge 6500N bridge with a FibreBridge 7600N or 7500N bridge

You can hot-swap a FibreBridge 6500N bridge with a FibreBridge 7600N or 7500N bridge to replace a failed bridge or upgrade your bridge in a fabric-attached or a bridge-attached MetroCluster configuration.

About this task

- This procedure is for hot-swapping a single FibreBridge 6500N bridge with single FibreBridge 7600N or 7500N bridge.
- When you hot-swap a FibreBridge 6500N bridge with a FibreBridge 7600N or 7500N bridge, you must use only one FC port and one SAS port on the FibreBridge 7600N or 7500N bridge.
- If you will be using in-band management of the bridge rather than IP management, the steps for configuring the Ethernet port and IP settings can be skipped, as noted in the relevant steps.

> If you are hot-swapping both FibreBridge 6500N bridges in a pair, you must use the Consolidate Multiple Storage Stacks procedure for zoning instructions. By replacing both FibreBridge 6500N bridges on the bridge, you can take advantage of the additional ports on the FibreBridge 7600N or 7500N bridge.

> Beginning with ONTAP 9.8, the `storage bridge` command is replaced with `system bridge`. The following steps show the `storage bridge` command, but if you are running ONTAP 9.8 or later, the `system bridge` command is preferred.

Steps

1. Do one of the following:
   - If the failed bridge is in a fabric-attached MetroCluster configuration, disable the switch port that connects to the bridge FC port.
   - If the failed bridge is in a stretch MetroCluster configuration, use either one of the available FC ports.
2. From the ONTAP cluster prompt, remove the bridge undergoing maintenance from health monitoring:
   a. Remove the bridge:

      ```
      storage bridge remove -name bridge-name
      ```

   b. View the list of monitored bridges and confirm that the removed bridge is not present:

      ```
      storage bridge show
      ```

3. Properly ground yourself.
4. Turn off the power switch of the bridge.
5. Disconnect the cables connected from the shelf to the FibreBridge 6500N bridge ports and power cables.

   You should make note of the ports that each cable was connected to.

6. Remove the FibreBridge 6500N bridge that you need to replace from the rack.
7. Install the new FibreBridge 7600N or 7500N bridge into the rack.
8. Reconnect the power cord and, if necessary, the shielded Ethernet cable.

> Do not reconnect the SAS or FC cables at this time.

9. If configuring for in-band management, connect a cable from FibreBridge RS-232 serial port to the serial (COM) port on a personal computer.

   The serial connection will be used for initial configuration, and then in-band management via ONTAP and the FC ports can be used to monitor and manage the bridge.

10. If configuring for IP management, connect the Ethernet management 1 port on each bridge to your network by using an Ethernet cable.

    In systems running ONTAP 9.5 or later, in-band management can be used to access the bridge via the FC ports rather than the Ethernet port. Beginning with ONTAP 9.8, only in-band management is supported and SNMP management is deprecated.

    The Ethernet management 1 port enables you to quickly download the bridge firmware (using ATTO ExpressNAV or FTP management interfaces) and to retrieve core files and extract logs.

11. If configuring for IP management, configure the Ethernet management 1 port for each bridge by following the procedure in section 2.0 of the *ATTO FibreBridge Installation and Operation Manual* for your bridge model.

    In systems running ONTAP 9.5 or later, in-band management can be used to access the bridge via the FC ports rather than the Ethernet port. Beginning with ONTAP 9.8, only in-band management is supported and SNMP management is deprecated.

    When running QuickNAV to configure an Ethernet management port, only the Ethernet management port that is connected by the Ethernet cable is configured. For example, if you also wanted to configure the Ethernet management 2 port, you would need to connect the Ethernet cable to port 2 and run QuickNAV.

12. Configure the bridge.

    If you retrieved the configuration information from the old bridge, use the information to configure the new bridge.

    Be sure to make note of the user name and password that you designate.

    The *ATTO FibreBridge Installation and Operation Manual* for your bridge model has the most current information on available commands and how to use them.

    > Do not configure time synchronization on ATTO FibreBridge 7600N or 7500N. The time synchronization for ATTO FibreBridge 7600N or 7500N is set to the cluster time after the bridge is discovered by ONTAP. It is also synchronized periodically once a day. The time zone used is GMT and is not changeable.

    a. If configuring for IP management, configure the IP settings of the bridge.

       To set the IP address without the QuickNAV utility, you need to have a serial connection to the FibreBridge.

       If using the CLI, you must run the following commands:

       ```
       set ipaddress mp1 ip-address
       ```

```
set ipsubnetmask mp1 subnet-mask

set ipgateway mp1 x.x.x.x

set ipdhcp mp1 disabled

set ethernetspeed mp1 1000
```

b. Configure the bridge name.

The bridges should each have a unique name within the MetroCluster configuration.

Example bridge names for one stack group on each site:

- bridge_A_1a
- bridge_A_1b
- bridge_B_1a
- bridge_B_1b

If using the CLI, you must run the following command:

```
set bridgename bridgename
```

c. If running ONTAP 9.4 or earlier, enable SNMP on the bridge:
```
set SNMP enabled
```

In systems running ONTAP 9.5 or later, in-band management can be used to access the bridge via the FC ports rather than the Ethernet port. Beginning with ONTAP 9.8, only in-band management is supported and SNMP management is deprecated.

13. Configure the bridge FC ports.

a. Configure the data rate/speed of the bridge FC ports.

The supported FC data rate depends on your model bridge.

- The FibreBridge 7600 bridge supports up to 32, 16, or 8 Gbps.
- The FibreBridge 7500 bridge supports up to 16, 8, or 4 Gbps.
- The FibreBridge 6500 bridge supports up to 8, 4, or 2 Gbps.

> The FCDataRate speed you select is limited to the maximum speed supported by both the bridge and the switch to which the bridge port connects. Cabling distances must not exceed the limitations of the SFPs and other hardware.

If using the CLI, you must run the following command:

```
set FCDataRate port-number port-speed
```

b. If you are configuring a FibreBridge 7500N or 6500N bridge, configure the connection mode that the port uses to ptp.

> The FCConnMode setting is not required when configuring a FibreBridge 7600N bridge.

If using the CLI, you must run the following command:

```
set FCConnMode port-number ptp
```

c. If you are configuring a FibreBridge 7600N or 7500N bridge, you must configure or disable the FC2 port.
   - If you are using the second port, you must repeat the previous substeps for the FC2 port.
   - If you are not using the second port, then you must disable the port:

     ```
     FCPortDisable port-number
     ```

d. If you are configuring a FibreBridge 7600N or 7500N bridge, disable the unused SAS ports:

   ```
   SASPortDisable sas-port
   ```

   > SAS ports A through D are enabled by default. You must disable the SAS ports that are not being used. If only SAS port A is used, then SAS ports B, C, and D must be disabled.

14. Secure access to the bridge and save the bridge's configuration.
    a. From the controller prompt check the status of the bridges:

       ```
       storage bridge show
       ```

       The output shows which bridge is not secured.

    b. Check the status of the unsecured bridge's ports:

       ```
       info
       ```

       The output shows the status of Ethernet ports MP1 and MP2.

    c. If Ethernet port MP1 is enabled, run the following command:

       ```
       set EthernetPort mp1 disabled
       ```

       > If Ethernet port MP2 is also enabled, repeat the previous substep for port MP2.

    d. Save the bridge's configuration.

       You must run the following commands:

       ```
       SaveConfiguration
       ```

       ```
       FirmwareRestart
       ```

       You are prompted to restart the bridge.

15. Turn on Health Monitoring for the FibreBridge 7600N or 7500N bridge.
16. Update the FibreBridge firmware on each bridge.

    If the new bridge is the same type as the partner bridge upgrade to the same firmware as the partner

bridge. If the new bridge is a different type to the partner bridge, upgrade to the latest firmware supported by the bridge and version of ONTAP. See the section "Updating firmware on a FibreBridge bridge" in the *MetroCluster Maintenance Guide*.

17. Reconnect the SAS and FC cables to the SAS A and Fibre Channel 1 ports on the new bridge.

    The SAS port must be cabled to the same shelf port that the FibreBridge 6500N bridge had been connected to.

    The FC port must be cabled to the same switch or controller port that the FibreBridge 6500N bridge had been connected to.

    > Do not force a connector into a port. The mini-SAS cables are keyed; when oriented correctly into a SAS port, the SAS cable clicks into place and the disk shelf SAS port LNK LED illuminates green. For disk shelves, you insert a SAS cable connector with the pull tab oriented down (on the underside of the connector).For controllers, the orientation of SAS ports can vary depending on the platform model; therefore, the correct orientation of the SAS cable connector varies.

18. Verify that the bridge can detect all of the disk drives and disk shelves it is connected to.

If you are using the…	Then…
ATTO ExpressNAV GUI	a. In a supported web browser, enter the IP address of the bridge in the browser box. You are brought to the ATTO FibreBridge homepage, which has a link. b. Click the link, and then enter your user name and the password that you designated when you configured the bridge. The ATTO FibreBridge status page appears with a menu to the left. c. Click **Advanced** in the menu. d. Enter the following command and then click **Submit** to see the list of disks visible to the bridge: `sastargets`
Serial port connection	Display the list of disks visible to the bridge: `sastargets`

The output shows the devices (disks and disk shelves) that the bridge is connected to. Output lines are sequentially numbered so that you can quickly count the devices. For example, the following output shows that 10 disks are connected:

```
Tgt VendorID ProductID        Type        SerialNumber
  0 NETAPP   X410_S15K6288A15 DISK        3QP1CLE300009940UHJV
  1 NETAPP   X410_S15K6288A15 DISK        3QP1ELF600009940V1BV
  2 NETAPP   X410_S15K6288A15 DISK        3QP1G3EW00009940U2M0
  3 NETAPP   X410_S15K6288A15 DISK        3QP1EWMP00009940U1X5
  4 NETAPP   X410_S15K6288A15 DISK        3QP1FZLE00009940G8YU
  5 NETAPP   X410_S15K6288A15 DISK        3QP1FZLF00009940TZKZ
  6 NETAPP   X410_S15K6288A15 DISK        3QP1CEB400009939MGXL
  7 NETAPP   X410_S15K6288A15 DISK        3QP1G7A900009939FNTT
  8 NETAPP   X410_S15K6288A15 DISK        3QP1FY0T00009940G8PA
  9 NETAPP   X410_S15K6288A15 DISK        3QP1FXW600009940VERQ
```

If the text “response truncated” appears at the beginning of the output, you can use Telnet to access the bridge and enter the same command to see all of the output.

19. Verify that the command output shows that the bridge is connected to all of the necessary disks and disk shelves in the stack.

If the output is…	Then…
Correct	Repeat the previous step for each remaining bridge.
Not correct	a. Check for loose SAS cables or correct the SAS cabling by repeating Step 17. b. Repeat the previous step for each remaining bridge.

20. Reenable the FC switch port that connects to the bridge.
21. Verify that all controllers have access through the new bridge to the disk shelves (that the system is cabled for Multipath HA), at the system console of both controllers:

```
run local sysconfig
```

It might take up to a minute for the system to complete discovery.

For example, the following output shows that the system is cabled for Multipath HA:

```
NetApp Release 8.3.2: Tue Jan 26 01:23:24 PST 2016
System ID: 1231231231 (node_A_1); partner ID: 4564564564 (node_A_2)
System Serial Number: 700000123123 (node_A_1); partner Serial Number:
700000456456 (node_A_2)
System Rev: B0
System Storage Configuration: Multi-Path HA
System ACP Connectivity: NA
```

If the command output indicates that the configuration is mixed-path or single-path HA, you must correct

the SAS and FC cabling because not all disk drives are accessible through the new bridge.

> When the system is not cabled as Multipath HA, restarting a bridge might cause loss of access to the disk drives and result in a multi-disk panic.

22. From the ONTAP cluster prompt, add the bridge to health monitoring:
    a. Add the bridge, using the command for your version of ONTAP:

ONTAP version	Command
9.5 and later	`storage bridge add -address 0.0.0.0 -managed-by in-band -name` *`bridge-name`*
9.4 and earlier	`storage bridge add -address` *`bridge-ip-address`* `-name` *`bridge-name`*

    b. Verify that the bridge has been added and is properly configured:
    `storage bridge show`

    It might take as long as 15 minutes to reflect all data because of the polling interval. The ONTAP health monitor can contact and monitor the bridge if the value in the “Status” column is “ok”, and other information, such as the worldwide name (WWN), is displayed.

    The following example shows that the FC-to-SAS bridges are configured:

```
controller_A_1::> storage bridge show

Bridge              Symbolic Name Is Monitored  Monitor Status
Vendor Model                Bridge WWN
------------------  ------------- ------------  --------------
------ -----------------    ----------
ATTO_10.10.20.10  atto01        true          ok              Atto
FibreBridge 7500N      20000010867038c0
ATTO_10.10.20.11  atto02        true          ok              Atto
FibreBridge 7500N      20000010867033c0
ATTO_10.10.20.12  atto03        true          ok              Atto
FibreBridge 7500N      20000010867030c0
ATTO_10.10.20.13  atto04        true          ok              Atto
FibreBridge 7500N      2000001086703b80

4 entries were displayed

 controller_A_1::>
```

23. Verify the operation of the MetroCluster configuration in ONTAP:
    a. Check whether the system is multipathed:

```
node run -node node-name sysconfig -a
```

b. Check for any health alerts on both clusters:
```
system health alert show
```

c. Confirm the MetroCluster configuration and that the operational mode is normal:

```
metrocluster show
```

d. Perform a MetroCluster check:

```
metrocluster check run
```

e. Display the results of the MetroCluster check:

```
metrocluster check show
```

f. Check for any health alerts on the switches (if present):

```
storage switch show
```

g. Run Config Advisor.

NetApp Downloads: Config Advisor

h. After running Config Advisor, review the tool's output and follow the recommendations in the output to address any issues discovered.

24. After replacing the part, return the failed part to NetApp, as described in the RMA instructions shipped with the kit. See the Part Return & Replacements page for further information.

Related information

In-band management of the FC-to-SAS bridges

Replacing a pair of FibreBridge 6500N bridges with 7600N or 7500N bridges

To take advantage of the additional FC2 port on the FibreBridge 7600N or 7500N bridges and reduce rack utilization, you can nondisruptively replace 6500N bridges and consolidate up to four storage stacks behind a single pair of FibreBridge 7600N or 7500N bridges.

Before you begin

You need the admin password and access to an FTP or SCP server.

About this task

You should use this procedure if:

- You are replacing a pair of FibreBridge 6500N bridges with FibreBridge 7600N or 7500N bridges.

  After the replacement, both bridges in the pair must be the same model.

- You previously replaced a single FibreBridge 6500N bridge with a 7600N or 7500N bridge and are now

replacing the second bridge in the pair.

- You have a pair of FibreBridge 7600N or 7500N bridges with available SAS ports and you are consolidating SAS storage stacks that are currently connected using FibreBridge 6500N bridges.

This procedure is nondisruptive and takes approximately two hours to complete.

Related information

Replacing a single FC-to-SAS bridge

Verifying storage connectivity

Before replacing bridges, you should verify bridge and storage connectivity. Familiarizing yourself with the command output enables you to subsequently confirm connectivity after making configuration changes.

You can issue these commands from the admin prompt of any of the controller modules in the MetroCluster configuration at the site undergoing maintenance.

1. Confirm connectivity to the disks by entering the following command on any one of the MetroCluster nodes:

   ```
   run local sysconfig -v
   ```

   The output shows the disks attached to the initiator ports on the controller, and identifies the shelves connected to the FC-to-SAS bridges:

   ```
   node_A_1> run local sysconfig -v
   NetApp Release 9.3.2X18: Sun Dec 13 01:23:24 PST 2017
   System ID: 4068741258 (node_A_1); partner ID: 4068741260 (node_B_1)
   System Serial Number: 940001025471 (node_A_1)
   System Rev: 70
   System Storage Configuration: Multi-Path HA**<=== Configuration should
   be multi-path HA**
   .
   .
   .
   slot 0: FC Host Adapter 0g (QLogic 8324 rev. 2, N-port, <UP>)**<===
   Initiator port**
           Firmware rev:      7.5.0
           Flash rev:         0.0.0
           Host Port Id:      0x60130
           FC Node Name:      5:00a:098201:bae312
           FC Port Name:      5:00a:098201:bae312
           SFP Vendor:        UTILITIES CORP.
           SFP Part Number:   FTLF8529P3BCVAN1
           SFP Serial Number: URQ0Q9R
           SFP Capabilities:  4, 8 or 16 Gbit
           Link Data Rate:    16 Gbit
           Switch Port:       brcd6505-fcs40:1
     **<List of disks visible to port\>**
            ID     Vendor   Model            FW    Size
   ```

```
        brcd6505-fcs29:12.126L1527     : NETAPP   X302_HJUPI01TSSM NA04
847.5GB (1953525168 512B/sect)
        brcd6505-fcs29:12.126L1528     : NETAPP   X302_HJUPI01TSSA NA02
847.5GB (1953525168 512B/sect)
        .
        .
        .
        **<List of FC-to-SAS bridges visible to port\>**
        FC-to-SAS Bridge:
        brcd6505-fcs40:12.126L0        : ATTO     FibreBridge6500N 1.61
FB6500N102980
        brcd6505-fcs42:13.126L0        : ATTO     FibreBridge6500N 1.61
FB6500N102980
        brcd6505-fcs42:6.126L0         : ATTO     FibreBridge6500N 1.61
FB6500N101167
        brcd6505-fcs42:7.126L0         : ATTO     FibreBridge6500N 1.61
FB6500N102974
        .
        .
        .
  **<List of storage shelves visible to port\>**
        brcd6505-fcs40:12.shelf6: DS4243  Firmware rev. IOM3 A: 0200
IOM3 B: 0200
        brcd6505-fcs40:12.shelf8: DS4243  Firmware rev. IOM3 A: 0200
IOM3 B: 0200
        .
        .
        .
```

Hot-swapping FibreBridge 6500N bridges to create a pair of FibreBridge 7600N or 7500N bridges

To hot-swap one or two FibreBridge 6500N bridges to create a configuration with a pair of FibreBridge 7600N or 7500N bridges, you must replace the bridges one at a time and follow the correct cabling procedure. The new cabling is different from the original cabling.

About this task

You can also use this procedure if the following conditions are true:

- You are replacing a pair of FibreBridge 6500N bridges that are both connected to the same stack of SAS storage.
- You previously replaced one FibreBridge 6500N bridge in the pair, and your storage stack is configured with one FibreBridge 6500N bridge and one FibreBridge 7600N or 7500N bridge.

  In this case, you should start with the step below to hot-swap the “bottom” FibreBridge 6500N bridge with a FibreBridge 7600N or 7500N bridge.

The following diagram shows an example of the initial configuration, in which four FibreBridge 6500N bridges are connecting two SAS storage stacks:

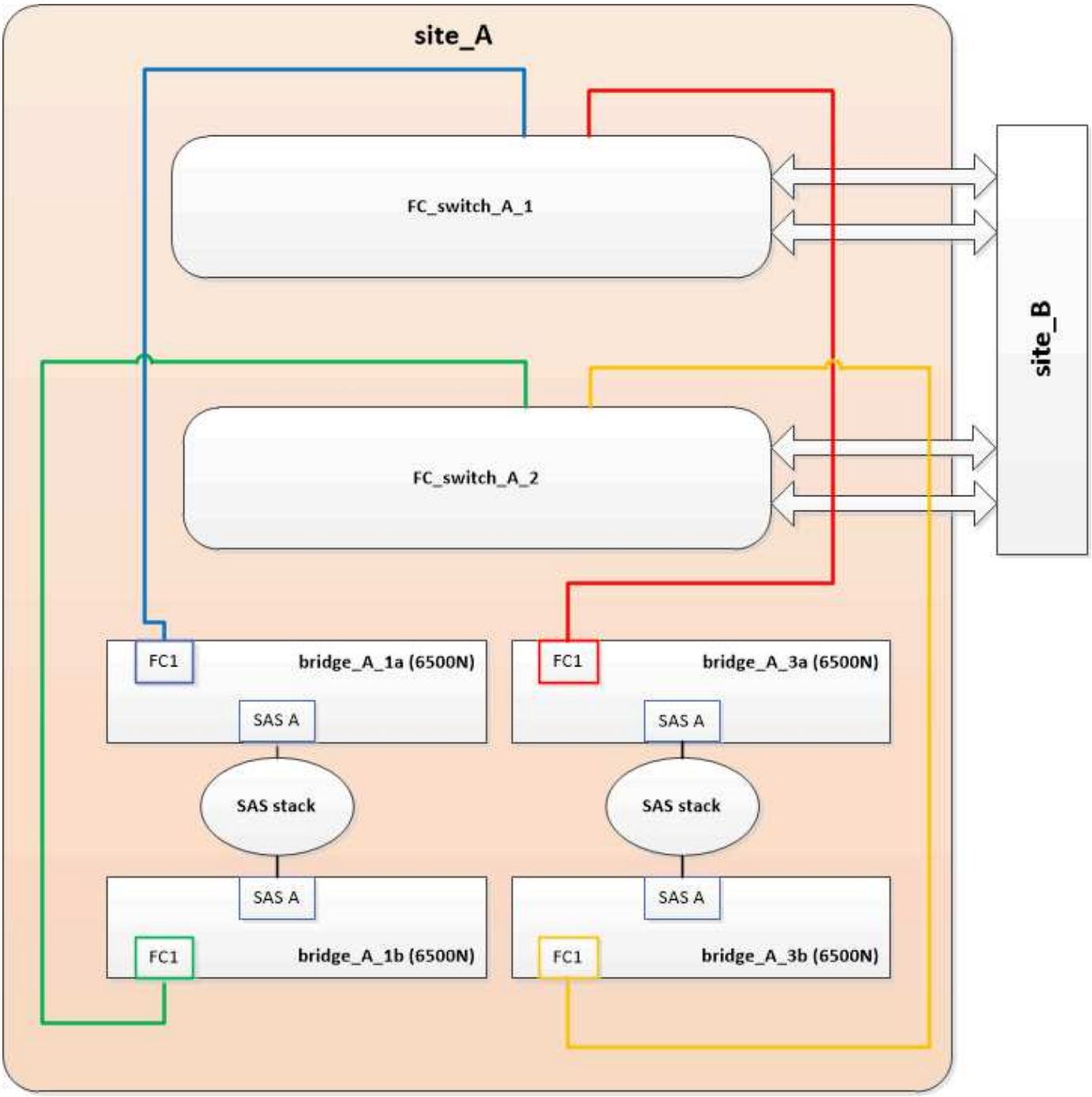

Steps

1. Using the following guidelines, hot-swap the "`top`"FibreBridge 6500N bridge with a FibreBridge 7600N or 7500N bridge using the procedure in Hot-swapping a FibreBridge 6500N bridge with a FibreBridge 7600N or 7500N bridge:

    - Connect the FibreBridge 7600N or 7500N bridge FC1 port to the switch or controller.

      This is the same connection that was made to the FibreBridge 6500N bridge FC1 port.

    - Do not connect the FibreBridge 7600N or 7500N bridge FC2 port at this time. The following diagram shows that bridge_A_1a has been replaced and is now a FibreBridge 7600N or 7500N bridge:

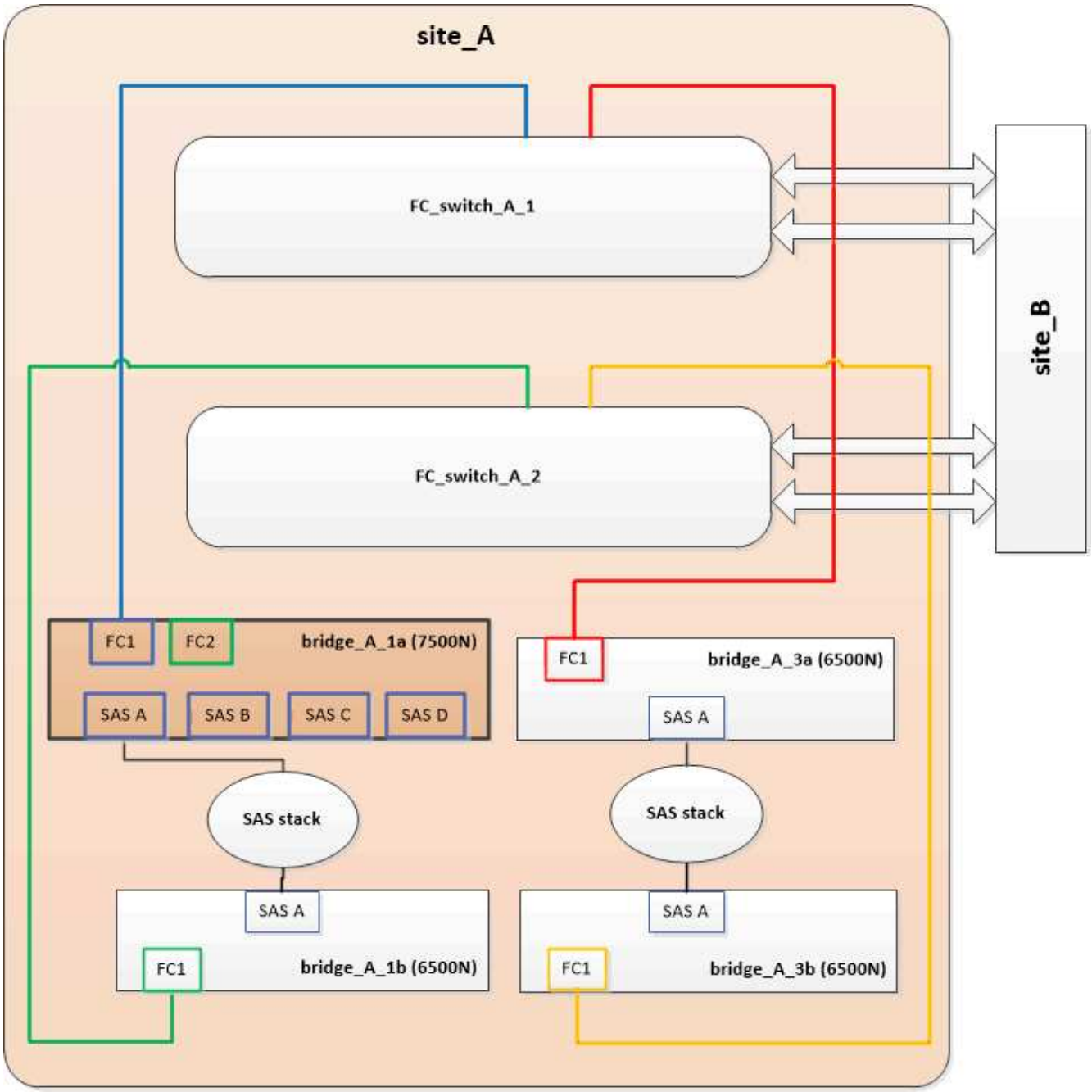

2. Confirm connectivity to the bridge-connected disks and that the new FibreBridge 7500N is visible in the configuration:

```
run local sysconfig -v
```

```
node_A_1> run local sysconfig -v
NetApp Release 9.3.2X18: Sun Dec 13 01:23:24 PST 2015
System ID: 0536872165 (node_A_1); partner ID: 0536872141 (node_B_1)
System Serial Number: 940001025465 (node_A_1)
System Rev: 70
System Storage Configuration: Multi-Path HA**<=== Configuration should
be multi-path HA**
.
```

```
.
.
slot 0: FC Host Adapter 0g (QLogic 8324 rev. 2, N-port, <UP>)**<===
Initiator port**
        Firmware rev:      7.5.0
        Flash rev:         0.0.0
        Host Port Id:      0x60100
        FC Node Name:      5:00a:098201:bae312
        FC Port Name:      5:00a:098201:bae312
        SFP Vendor:        FINISAR CORP.
        SFP Part Number:   FTLF8529P3BCVAN1
        SFP Serial Number: URQ0R1R
        SFP Capabilities:  4, 8 or 16 Gbit
        Link Data Rate:    16 Gbit
        Switch Port:       brcd6505-fcs40:1
  **<List of disks visible to port\>**
         ID     Vendor   Model            FW    Size
        brcd6505-fcs40:12.126L1527     : NETAPP   X302_HJUPI01TSSM NA04
847.5GB (1953525168 512B/sect)
        brcd6505-fcs40:12.126L1528     : NETAPP   X302_HJUPI01TSSA NA02
847.5GB (1953525168 512B/sect)
        .
        .
        .
        **<List of FC-to-SAS bridges visible to port\>**
        FC-to-SAS Bridge:
        brcd6505-fcs40:12.126L0        : ATTO     FibreBridge7500N A30H
FB7500N100104**<===**
        brcd6505-fcs42:13.126L0        : ATTO     FibreBridge6500N 1.61
FB6500N102980
        brcd6505-fcs42:6.126L0         : ATTO     FibreBridge6500N 1.61
FB6500N101167
        brcd6505-fcs42:7.126L0         : ATTO     FibreBridge6500N 1.61
FB6500N102974
        .
        .
        .
  **<List of storage shelves visible to port\>**
        brcd6505-fcs40:12.shelf6: DS4243  Firmware rev. IOM3 A: 0200
IOM3 B: 0200
        brcd6505-fcs40:12.shelf8: DS4243  Firmware rev. IOM3 A: 0200
IOM3 B: 0200
        .
        .
        .
```

3. Using the following guidelines, hot-swap the "`bottom`"FibreBridge 6500N bridge with a FibreBridge 7600N or 7500N bridge using the procedure in Hot-swapping a FibreBridge 6500N bridge with a FibreBridge 7600N or 7500N bridge:
   - Connect the FibreBridge 7600N or 7500N bridge FC2 port to the switch or controller.

     This is the same connection that was made to the FibreBridge 6500N bridge FC1 port.
   - Do not connect the FibreBridge 7600N or 7500N bridge FC1 port at this time.

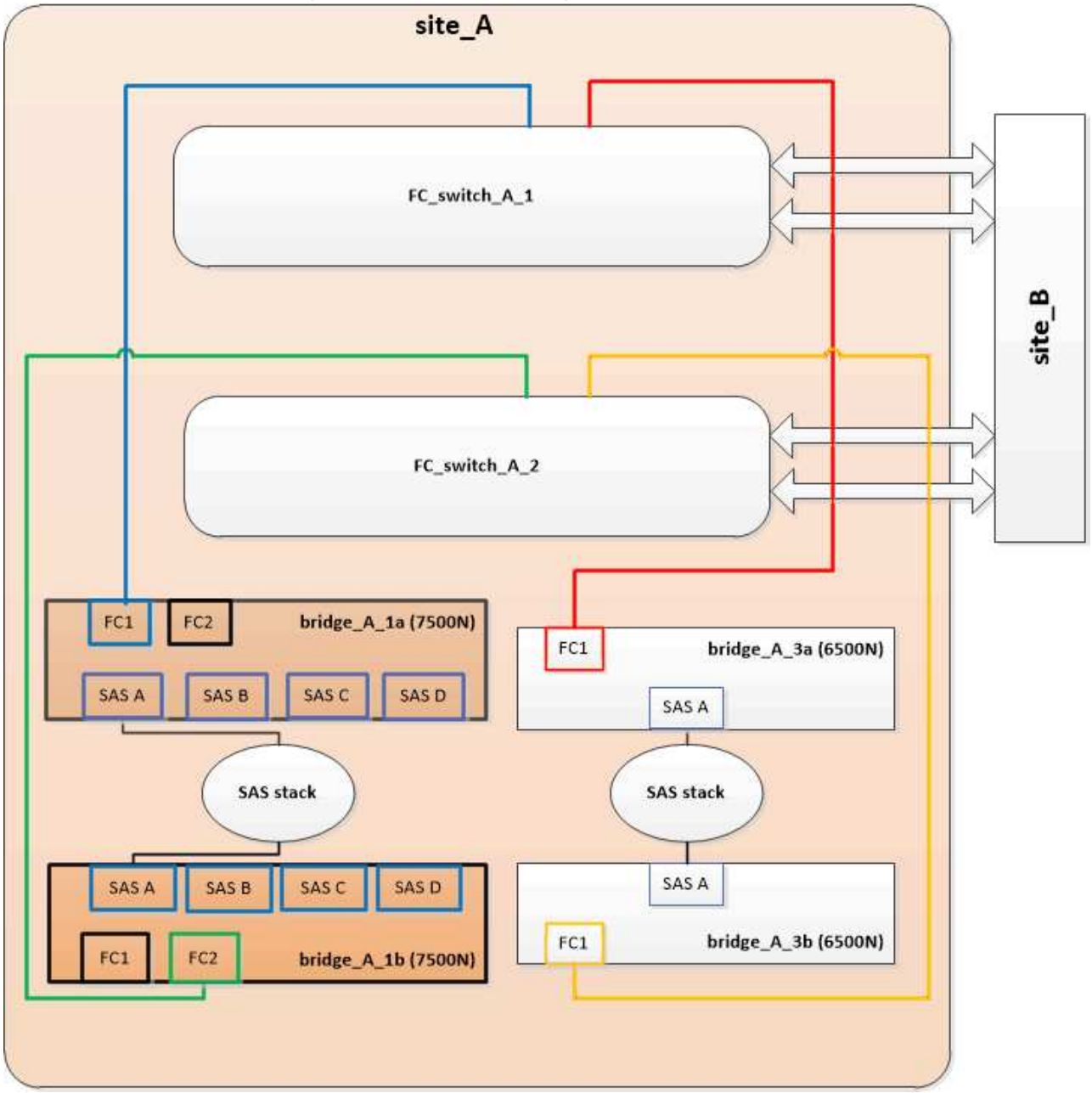

4. Confirm connectivity to the bridge-connected disks:

   ```
   run local sysconfig -v
   ```

   The output shows the disks attached to the initiator ports on the controller, and identifies the shelves connected to the FC-to-SAS bridges:

```
node_A_1> run local sysconfig -v
NetApp Release 9.3.2X18: Sun Dec 13 01:23:24 PST 2015
System ID: 0536872165 (node_A_1); partner ID: 0536872141 (node_B_1)
System Serial Number: 940001025465 (node_A_1)
System Rev: 70
System Storage Configuration: Multi-Path HA**<=== Configuration should
be multi-path HA**
.
.
.
slot 0: FC Host Adapter 0g (QLogic 8324 rev. 2, N-port, <UP>)**<===
Initiator port**
        Firmware rev:      7.5.0
        Flash rev:         0.0.0
        Host Port Id:      0x60100
        FC Node Name:      5:00a:098201:bae312
        FC Port Name:      5:00a:098201:bae312
        SFP Vendor:        FINISAR CORP.
        SFP Part Number:   FTLF8529P3BCVAN1
        SFP Serial Number: URQ0R1R
        SFP Capabilities:  4, 8 or 16 Gbit
        Link Data Rate:    16 Gbit
        Switch Port:       brcd6505-fcs40:1
  **<List of disks visible to port\>**
         ID     Vendor   Model            FW    Size
        brcd6505-fcs40:12.126L1527     : NETAPP   X302_HJUPI01TSSM NA04
847.5GB (1953525168 512B/sect)
        brcd6505-fcs40:12.126L1528     : NETAPP   X302_HJUPI01TSSA NA02
847.5GB (1953525168 512B/sect)
        .
        .
        .
        **<List of FC-to-SAS bridges visible to port\>**
        FC-to-SAS Bridge:
        brcd6505-fcs40:12.126L0        : ATTO     FibreBridge7500N A30H
FB7500N100104
        brcd6505-fcs42:13.126L0        : ATTO     FibreBridge7500N A30H
FB7500N100104
        .
        .
        .
  **<List of storage shelves visible to port\>**
        brcd6505-fcs40:12.shelf6: DS4243  Firmware rev. IOM3 A: 0200
IOM3 B: 0200
        brcd6505-fcs40:12.shelf8: DS4243  Firmware rev. IOM3 A: 0200
IOM3 B: 0200
```

```
.
.
.
```

Cabling the bridge SAS ports when consolidating storage behind FibreBridge 7600N or 7500N bridges

When consolidating multiple SAS storage stacks behind a single pair of FibreBridge 7600N or 7500N bridges with available SAS ports, you must move the top and bottom SAS cables to the new bridges.

About this task

The FibreBridge 6500N bridge SAS ports use QSFP connectors. The FibreBridge 7600N or 7500N bridge SAS ports use mini-SAS connectors.

> If you insert a SAS cable into the wrong port, when you remove the cable from a SAS port, you must wait at least 120 seconds before plugging the cable into a different SAS port. If you fail to do so, the system will not recognize that the cable has been moved to another port.

> Wait at least 10 seconds before connecting the port. The SAS cable connectors are keyed; when oriented correctly into a SAS port, the connector clicks into place and the disk shelf SAS port LNK LED illuminates green. For disk shelves, you insert a SAS cable connector with the pull tab oriented down (on the underside of the connector).

Steps

1. Remove the cable that connects the SAS A port of the top FibreBridge 6500N bridge to the top SAS shelf, being sure to note the SAS port on the storage shelf to which it connects.

   The cable is shown in blue in the following example:

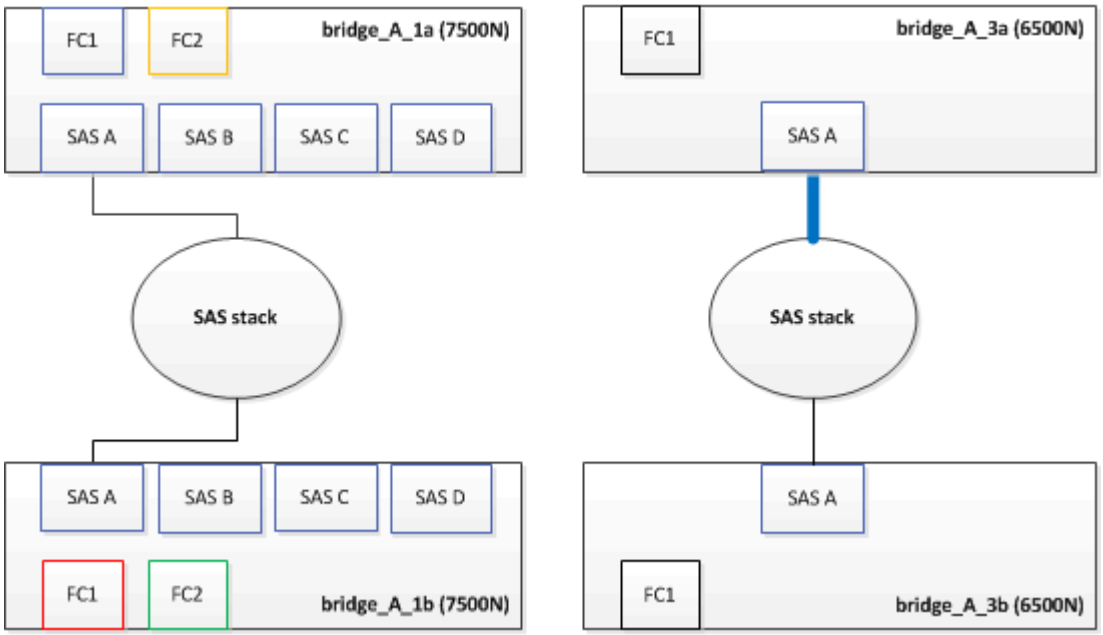

2. Using a cable with a mini-SAS connector, connect the same SAS port on the storage shelf to the SAS B port of the top FibreBridge 7600N or 7500N bridge.

The cable is shown in blue in the following example:

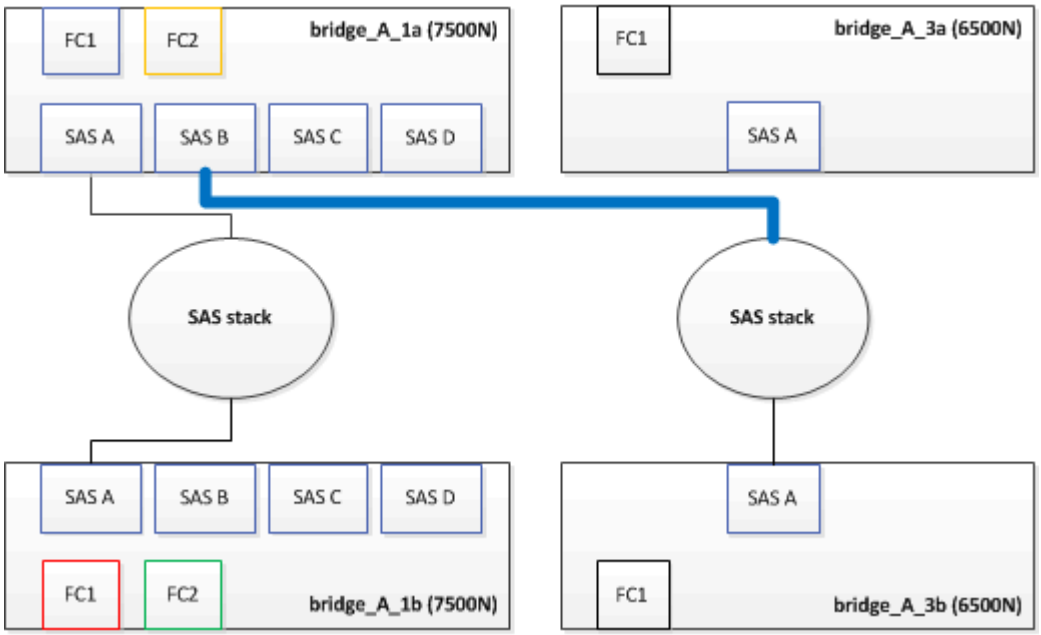

3. Remove the cable that connects the SAS A port of the bottom FibreBridge 6500N bridge to the top SAS shelf, being sure to note the SAS port on the storage shelf to which it connects.

   This cable is shown in green in the following example:

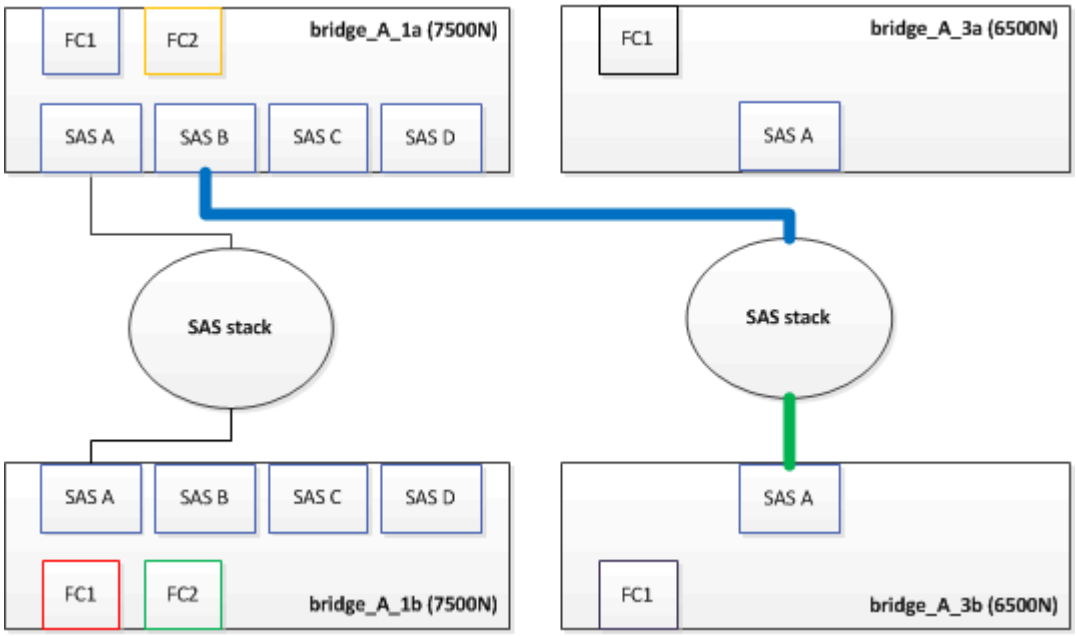

4. Using a cable with a mini-SAS connector, connect the same SAS port on the storage shelf to the SAS B port of the bottom FibreBridge 7600N or 7500N bridge.

   This cable is shown in green in the following example:

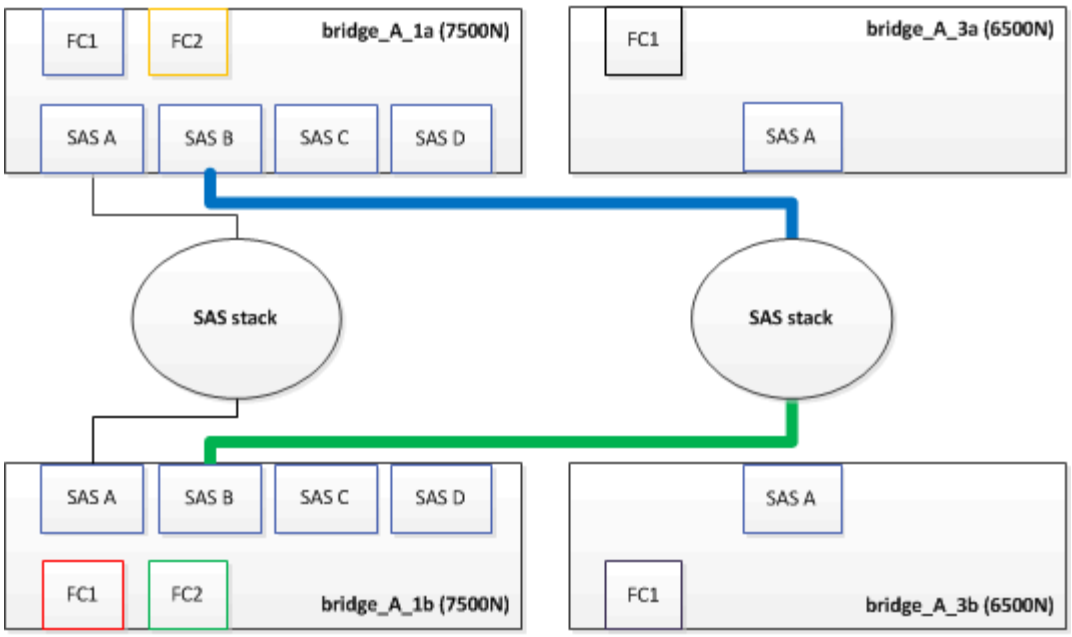

5. Confirm connectivity to the bridge-connected disks:

   ```
   run local sysconfig -v
   ```

   The output shows the disks attached to the initiator ports on the controller, and identifies the shelves connected to the FC-to-SAS bridges:

   ```
   node_A_1> run local sysconfig -v
   NetApp Release 9.3.2X18: Sun Dec 13 01:23:24 PST 2015
   System ID: 0536872165 (node_A_1); partner ID: 0536872141 (node_B_1)
   System Serial Number: 940001025465 (node_A_1)
   System Rev: 70
   System Storage Configuration: Multi-Path HA**<=== Configuration should
   be multi-path HA**
   .
   .
   .
   slot 0: FC Host Adapter 0g (QLogic 8324 rev. 2, N-port, <UP>)**<===
   Initiator port**
           Firmware rev:      7.5.0
           Flash rev:         0.0.0
           Host Port Id:      0x60100
           FC Node Name:      5:00a:098201:bae312
           FC Port Name:      5:00a:098201:bae312
           SFP Vendor:        FINISAR CORP.
           SFP Part Number:   FTLF8529P3BCVAN1
           SFP Serial Number: URQ0R1R
           SFP Capabilities:  4, 8 or 16 Gbit
           Link Data Rate:    16 Gbit
           Switch Port:       brcd6505-fcs40:1
   ```

```
  **<List of disks visible to port\>**
         ID     Vendor   Model            FW    Size
        brcd6505-fcs40:12.126L1527     : NETAPP   X302_HJUPI01TSSM NA04
847.5GB (1953525168 512B/sect)
        brcd6505-fcs40:12.126L1528     : NETAPP   X302_HJUPI01TSSA NA02
847.5GB (1953525168 512B/sect)
        .
        .
        .
        **<List of FC-to-SAS bridges visible to port\>**
        FC-to-SAS Bridge:
        brcd6505-fcs40:12.126L0        : ATTO     FibreBridge7500N A30H
FB7500N100104
        brcd6505-fcs42:13.126L0        : ATTO     FibreBridge7500N A30H
FB7500N100104
        .
        .
        .
  **<List of storage shelves visible to port\>**
        brcd6505-fcs40:12.shelf6: DS4243  Firmware rev. IOM3 A: 0200
IOM3 B: 0200
        brcd6505-fcs40:12.shelf8: DS4243  Firmware rev. IOM3 A: 0200
IOM3 B: 0200
        .
        .
        .
```

6. Remove the old FibreBridge 6500N bridges that are no longer connected to the SAS storage.
7. Wait two minutes for the system to recognize the changes.
8. If the system was cabled incorrectly, remove the cable, correct the cabling, and then reconnect the correct cable.
9. If necessary, repeat the preceding steps to move up to two additional SAS stacks behind the new FibreBridge 7600N or 7500N bridges, using SAS ports C and then D.

   Each SAS stack must be connected to the same SAS port on the top and bottom bridge. For example, if the top connection of the stack is connected to the top bridge SAS B port, the bottom connection must be connected to the SAS B port of the bottom bridge.

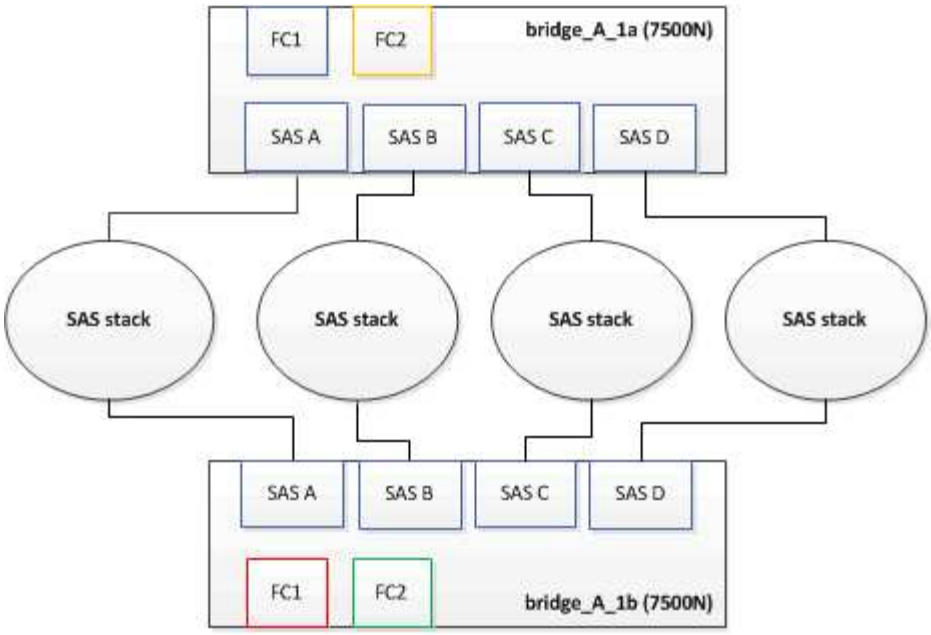

Updating zoning when adding FibreBridge 7600N or 7500N bridges to a configuration

The zoning must be changed when you are replacing FibreBridge 6500N bridges with FibreBridge 7600N or 7500N bridges and using both FC ports on the FibreBridge 7600N or 7500N bridges. The required changes depend on whether you are running a version of ONTAP earlier than 9.1 or 9.1 and later.

Updating zoning when adding FibreBridge 7500N bridges to a configuration (prior to ONTAP 9.1)

The zoning must be changed when you are replacing FibreBridge 6500N bridges with FibreBridge 7500N bridges and using both FC ports on the FibreBridge 7500N bridges. Each zone can have no more than four initiator ports. The zoning you use depends on whether you are running ONTAP prior to version 9.1 or 9.1 and later

About this task

The specific zoning in this task is for versions of ONTAP prior to version 9.1.

The zoning changes are required to avoid issues with ONTAP, which requires that no more than four FC initiator ports can have a path to a disk. After recabling to consolidate the shelves, the existing zoning would result in each disk being reachable by eight FC ports. You must change the zoning to reduce the initiator ports in each zone to four.

The following diagram shows the zoning on site_A before the changes:

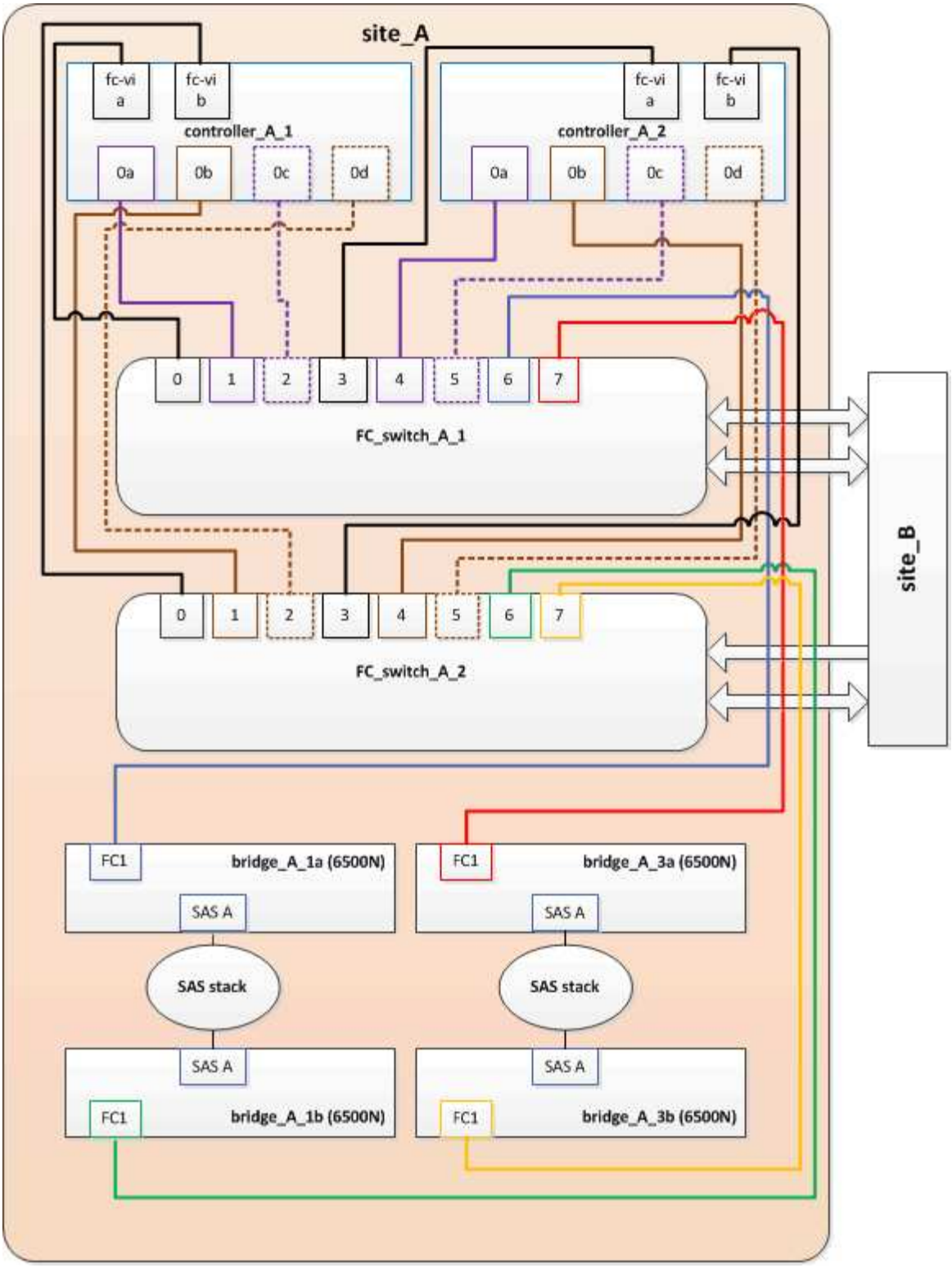

Steps

1. Update the storage zones for the FC switches by removing half of the initiator ports from each existing zone and creating new zones for the FibreBridge 7500N FC2 ports.

   The zones for the new FC2 ports will contain the initiator ports removed from the existing zones. In the diagrams, these zones are shown with dashed lines.

   For details about the zoning commands, see the FC switch sections of the Fabric-attached MetroCluster installation and configuration or Stretch MetroCluster installation and configuration.

The following examples show the storage zones and the ports in each zone before and after the consolidation. The ports are identified by *domain, port* pairs.

- Domain 5 consists of switch FC_switch_A_1.
- Domain 6 consists of switch FC_switch_A_2.
- Domain 7 consists of switch FC_switch_B_1.
- Domain 8 consists of switch FC_switch_B_2.

Before or after consolidation	**Zone**	**Domains and ports**	**Colors in diagrams (The diagrams only show Site A)**
Zones before the consolidation. There is a zone for each FC port on the four FibreBridge 6500N bridges.	STOR_A_1a-FC1	5,1; 5,2; 5,4; 5,5; 7,1; 7,2; 7,4; 7,5; 5,6	Purple + dashed purple + blue
	STOR_A_1b-FC1	6,1; 6,2; 6,4; 6,5; 8,1; 8,2; 8,4; 8,5; 6,6	Brown + dashed brown + green
	STOR_A_2a-FC1	5,1; 5,2; 5,4; 5,5; 7,1; 7,2; 7,4; 7,5; 5,7	Purple + dashed purple + red
	STOR_A_2b-FC1	6,1; 6,2; 6,4; 6,5; 8,1; 8,2; 8,4; 8,5; 6,7	Brown + dashed brown + orange
Zones after the consolidation. There is a zone for each FC port on the two FibreBridge 7500N bridges.	STOR_A_1a-FC1	7,1; 7,4; 5,1; 5,4; 5,6	Purple + blue
	STOR_A_1b-FC1	7,2; 7,5; 5,2; 5,5; 5,7	Dashed purple + red
	STOR_A_1a-FC2	8,1; 8,4; 6,1; 6,4; 6,6	Brown + green
	STOR_A_1b-FC2	8,2; 8,5; 6,2; 6,5; 6,7	Dashed brown + orange

The following diagram shows zoning at site_A after the consolidation:

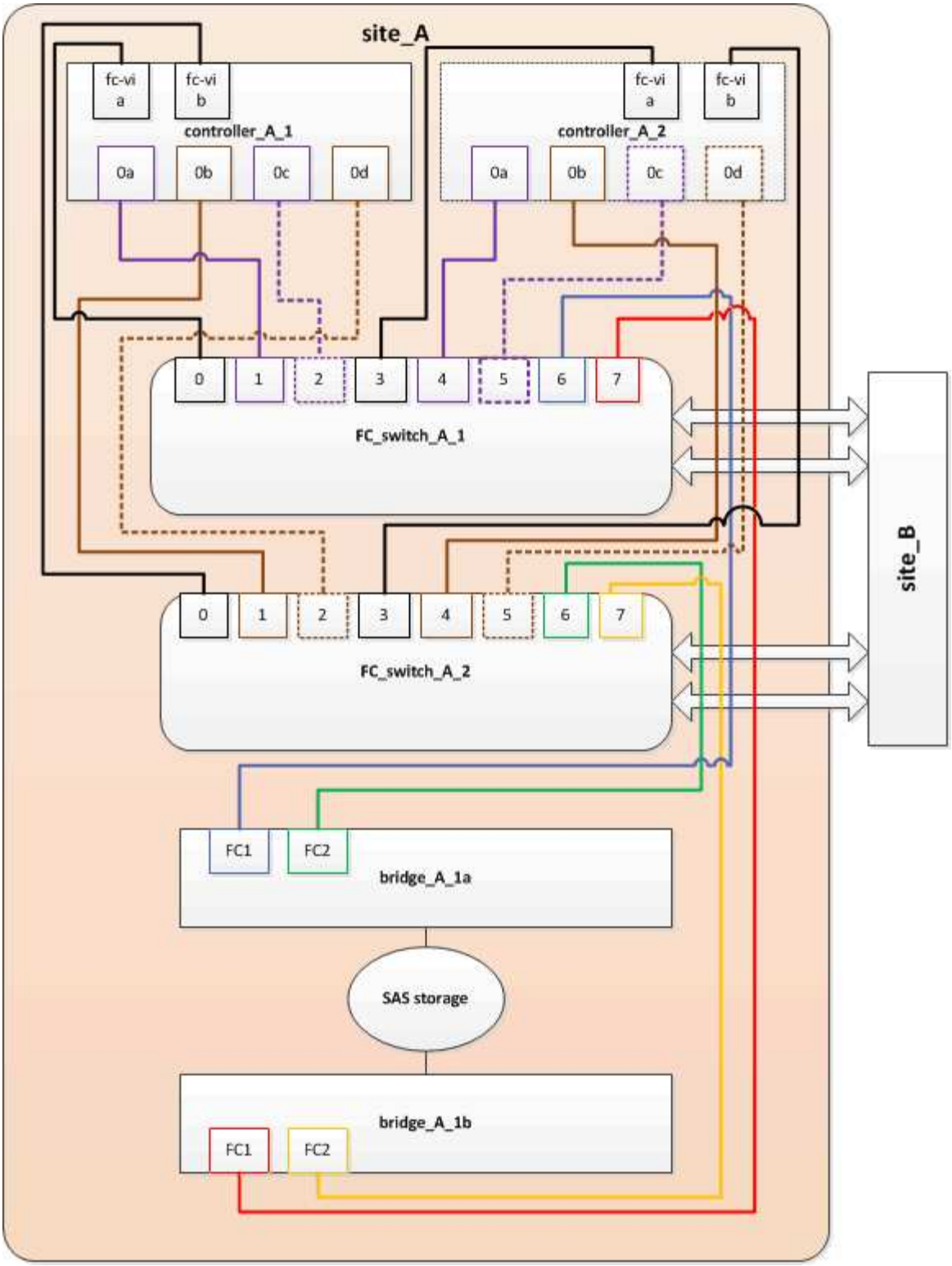

Updating zoning when adding FibreBridge 7600N or 7500N bridges to a configuration (ONTAP 9.1 and later)

The zoning must be changed when you are replacing FibreBridge 6500N bridges with FibreBridge 7600N or 7500N bridges and using both FC ports on the FibreBridge 7600N or 7500N bridges. Each zone can have no more than four initiator ports.

About this task

- This task applies to ONTAP 9.1 and later.
- FibreBridge 7600N bridges are supported in ONTAP 9.6 and later.
- The specific zoning in this task is for ONTAP 9.1 and later.
- The zoning changes are required to avoid issues with ONTAP, which requires that no more than four FC initiator ports can have a path to a disk.

  After recabling to consolidate the shelves, the existing zoning would result in each disk being reachable by eight FC ports. You must change the zoning to reduce the initiator ports in each zone to four.

Step

1. Update the storage zones for the FC switches by removing half of the initiator ports from each existing zone and creating new zones for the FibreBridge 7600N or 7500N FC2 ports.

   The zones for the new FC2 ports will contain the initiator ports removed from the existing zones.

   Refer to the FC switch section of Fabric-attached MetroCluster installation and configuration for details about the zoning commands.

Cabling the second bridge FC port when adding FibreBridge 7600N or 7500N bridges to a configuration

To provide multiple paths to the storage stacks, you can cable the second FC port on each FibreBridge 7600N or 7500N bridge when you have added the FibreBridge 7600N or 7500N bridge to your configuration.

Before you begin

The zoning must have been adjusted to provide zones for the second FC ports.

Steps

1. Cable the FC2 port of the top bridge to the correct port on FC_switch_A_2.

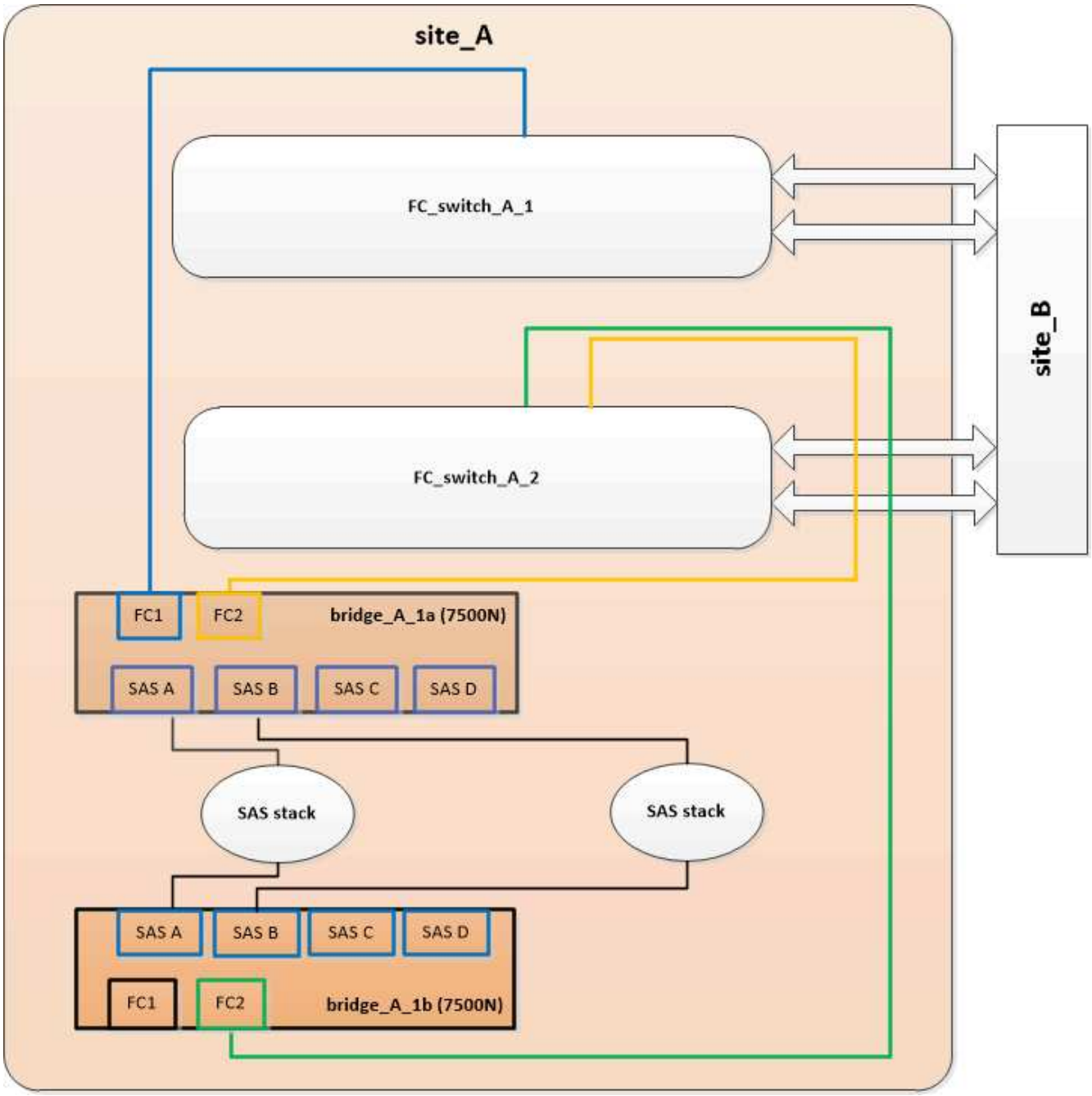

2. Cable the FC1 port of the bottom bridge to the correct port on FC_switch_A_1.

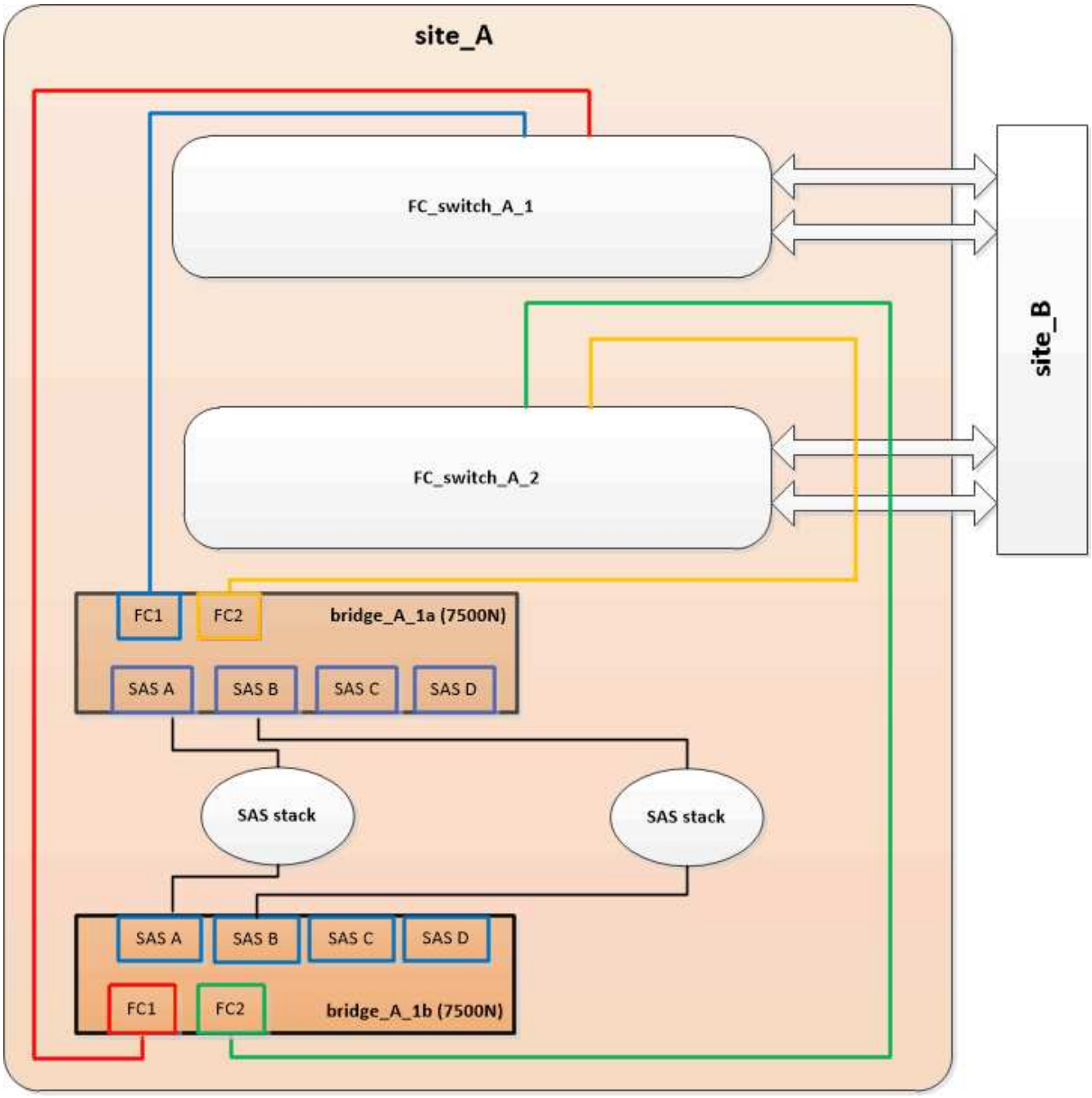

3. Confirm connectivity to the bridge-connected disks:

   ```
   run local sysconfig -v
   ```

   The output shows the disks attached to the initiator ports on the controller, and identifies the shelves connected to the FC-to-SAS bridges:

   ```
   node_A_1> run local sysconfig -v
   NetApp Release 9.3.2X18: Sun Dec 13 01:23:24 PST 2015
   System ID: 0536872165 (node_A_1); partner ID: 0536872141 (node_B_1)
   System Serial Number: 940001025465 (node_A_1)
   System Rev: 70
   System Storage Configuration: Multi-Path HA**<=== Configuration should
   ```

```
be multi-path HA**
.
.
.
slot 0: FC Host Adapter 0g (QLogic 8324 rev. 2, N-port, <UP>)**<===
Initiator port**
        Firmware rev:      7.5.0
        Flash rev:         0.0.0
        Host Port Id:      0x60100
        FC Node Name:      5:00a:098201:bae312
        FC Port Name:      5:00a:098201:bae312
        SFP Vendor:        FINISAR CORP.
        SFP Part Number:   FTLF8529P3BCVAN1
        SFP Serial Number: URQ0R1R
        SFP Capabilities:  4, 8 or 16 Gbit
        Link Data Rate:    16 Gbit
        Switch Port:       brcd6505-fcs40:1
  **<List of disks visible to port\>**
         ID     Vendor   Model            FW    Size
        brcd6505-fcs40:12.126L1527     : NETAPP   X302_HJUPI01TSSM NA04
847.5GB (1953525168 512B/sect)
        brcd6505-fcs40:12.126L1528     : NETAPP   X302_HJUPI01TSSA NA02
847.5GB (1953525168 512B/sect)
        .
        .
        .
        **<List of FC-to-SAS bridges visible to port\>**
        FC-to-SAS Bridge:
        brcd6505-fcs40:12.126L0        : ATTO     FibreBridge7500N A30H
FB7500N100104
        brcd6505-fcs42:13.126L0        : ATTO     FibreBridge7500N A30H
FB7500N100104
        .
        .
        .
  **<List of storage shelves visible to port\>**
        brcd6505-fcs40:12.shelf6: DS4243  Firmware rev. IOM3 A: 0200
IOM3 B: 0200
        brcd6505-fcs40:12.shelf8: DS4243  Firmware rev. IOM3 A: 0200
IOM3 B: 0200
        .
        .
        .
```

Disabling unused SAS ports on the FC-to-SAS bridges

After making cabling changes to the bridge, you should disable any unused SAS ports on FC-to-SAS bridges to avoid health monitor alerts related to the unused ports.

Steps

1. Disable unused SAS ports on the top FC-to-SAS bridge:
   a. Log in to the bridge CLI.
   b. Disable any unused ports.

   > If you have configured an ATTO 7500N bridge, then all of the SAS ports (A through D) are enabled by default, and you must disable the SAS ports that are not being used:
   >
   > `SASPortDisable` *`sas port`*

   If SAS ports A and B are used, then SAS ports C and D must be disabled. In the following example, the unused SAS ports C and D are disabled:

   ```
   Ready. *
   SASPortDisable C

   SAS Port C has been disabled.

   Ready. *
   SASPortDisable D

   SAS Port D has been disabled.

   Ready. *
   ```

   c. Save the bridge configuration:
   `SaveConfiguration`

   The following example shows that SAS ports C and D have been disabled. Note that the asterisk no longer appears, indicating that the configuration has been saved.

   ```
   Ready. *
   SaveConfiguration

   Ready.
   ```

2. Repeat the previous step on the bottom FC-to-SAS bridge.

Requirements for using other interfaces to configure and manage FibreBridge bridges

You can use the combination of a serial port, Telnet, and FTP to manage the FibreBridge bridges instead of the recommended management interfaces. Your system must meet the requirements for the applicable interface before you install the bridges.

You can use a serial port or Telnet to configure the bridge and Ethernet management 1 port, and to manage the bridge. You can use FTP to update the bridge firmware.

> The *ATTO FibreBridge Installation and Operation Manual* for your model bridge has more information about management interfaces.

You can access this document on the ATTO web site by using the link provided on the ATTO Fibrebridge Description page.

Serial port

When using the serial port to configure and manage a bridge, and to configure the Ethernet management 1 port, your system must meet the following requirements:

- A serial cable (which connects from the bridge serial port to a serial (COM) port on the computer you are using for setup)

  The bridge serial port is RJ-45 and has the same pin-out as the controllers.

- A terminal emulation program such as Hyperterminal, Teraterm, or PuTTY to access the console

  The terminal program should be capable of logging screen output to a file.

Telnet

When using Telnet to configure and manage a bridge, your system must meet the following requirements:

- A serial cable (which connects from the bridge serial port to a serial (COM) port on the computer you are using for setup)

  The bridge serial port is RJ-45 and has the same pin-out as the controllers.

- (Recommended) A non-default user name and password (for accessing the bridge)
- A terminal emulation program such as Hyperterminal, Teraterm, or PuTTY to access the console

  The terminal program should be capable of logging screen output to a file.

- An IP address, subnet mask, and gateway information for the Ethernet management 1 port on each bridge

FTP

When using FTP to update bridge firmware, your system must meet the following requirements:

- A standard Ethernet cable (which connects from the bridge Ethernet management 1 port to your network)

- (Recommended) A non-default user name and password (for accessing the bridge)

Hot-replacing a failed power supply module

When there is a change in status of a power supply module to the bridge, you can remove and install the power supply module.

You can view the change in status of a power supply module through the LEDs on the bridge. You can also view the status of power supply modules via ExpressNAV GUI and the bridge CLI, via serial port, or via Telnet.

- This procedure is NDO (non-disruptive) and takes approximately 15 minutes to complete.
- You need the admin password and access to an FTP or SCP server.

> The *ATTO FibreBridge Installation and Operation Manual* for your model bridge has more information about management interfaces.

You can access this and other content on the ATTO web site by using the link provided on the ATTO Fibrebridge Description page.

In-band management of the FC-to-SAS bridges

Beginning with ONTAP 9.5 with FibreBridge 7500N or 7600N bridges, in-band management of the bridges is supported as an alternative to IP management of the bridges. Beginning with ONTAP 9.8, out-of-band management is deprecated.

> **About this task**
>
> Beginning with ONTAP 9.8, the `storage bridge` command is replaced with `system bridge`. The following steps show the `storage bridge` command, but if you are running ONTAP 9.8 or later, the `system bridge` command is preferred.

When using in-band management, the bridges can be managed and monitored from the ONTAP CLI via the FC connection to the bridge. Physical access to the bridge via the bridge Ethernet ports is not required, reducing the security vulnerability of the bridge.

The availability of in-band management of the bridges depends on the version of ONTAP:

- Beginning with ONTAP 9.8, bridges are managed via in-band connections by default and out-of-band management of the bridges via SNMP is deprecated.
- ONTAP 9.5 through 9.7: Either in-band management or out-of-band SNMP management is supported.
- Prior to ONTAP 9.5, only out-of-band SNMP management is supported.

Bridge CLI commands can be issued from the ONTAP interface `storage bridge run-cli -name` *`bridge-name`* `-command` *`bridge-command-name`* command at the ONTAP interface.

> Using in-band management with IP access disabled is recommended to improve security by limiting physical connectivity the bridge.

Related information

Hot-swapping a bridge with a replacement bridge of the same model

Hot-swapping a FibreBridge 7500N with a 7600N bridge

Hot-swapping a FibreBridge 6500N bridge with a FibreBridge 7600N or 7500N bridge

Hot-adding a stack of SAS disk shelves and bridges

Managing a FibreBridge bridge from ONTAP

Beginning with ONTAP 9.5, you can use the ONTAP CLI to pass FibreBridge commands to the bridge and display the results of those commands.

About this task

> Beginning with ONTAP 9.8, the `storage bridge` command is replaced with `system bridge`. The following steps show the `storage bridge` command, but if you are running ONTAP 9.8 or later, the `system bridge` command is preferred.

Steps

1. Run the applicable FibreBridge command within the `storage bridge run-cli` command:

   `storage bridge run-cli -name` *`bridge-name`* `-command` *`"command-text"`*

   The following command runs the FibreBridge `SASPortDisable` command from the ONTAP prompt to disable SAS port b on the bridge:

   ```
   cluster_A::> storage bridge run-cli -name "SASPortDisable b"

   SAS Port B has been disabled.
   Ready
   cluster_A::>
   ```

Securing or unsecuring the FibreBridge bridge

To easily disable potentially unsecure Ethernet protocols on a bridge, beginning with ONTAP 9.5 you can secure the bridge. This disables the bridge's Ethernet ports. You can also reenable Ethernet access.

- Securing the bridge disables telnet and other IP port protocols and services (FTP, ExpressNAV, ICMP, or QuickNAV) on the bridge.
- This procedure uses out-of-band management using the ONTAP prompt, which is available beginning with ONTAP 9.5.

  You can issue the commands from the bridge CLI if you are not using out-of-band management.

- The **`unsecurebridge`** command can be used to reenable the Ethernet ports.
- In ONTAP 9.7 and earlier, running the **`securebridge`** command on the ATTO FibreBridge might not update the bridge status correctly on the partner cluster. If this occurs, run the **`securebridge`** command

from the partner cluster.

> Beginning with ONTAP 9.8, the **`storage bridge`** command is replaced with **`system bridge`**. The following steps show the **`storage bridge`** command, but if you are running ONTAP 9.8 or later, the **`system bridge`** command is preferred.

Steps

1. From the ONTAP prompt of the cluster containing the bridge, secure or unsecure the bridge.

   The following command secures bridge_A_1:

   ```
   cluster_A> storage bridge run-cli -bridge bridge_A_1 -command
   securebridge
   ```

   The following command unsecures bridge_A_1:

   ```
   cluster_A> storage bridge run-cli -bridge bridge_A_1 -command
   unsecurebridge
   ```

2. From the ONTAP prompt of the cluster containing the bridge, save the bridge configuration:

   `storage bridge run-cli -bridge` ***`bridge-name`*** **`-command saveconfiguration`**

   The following command secures bridge_A_1:

   ```
   cluster_A> storage bridge run-cli -bridge bridge_A_1 -command
   saveconfiguration
   ```

3. From the ONTAP prompt of the cluster containing the bridge, restart the bridge's firmware:

   `storage bridge run-cli -bridge` ***`bridge-name`*** **`-command firmwarerestart`**

   The following command secures bridge_A_1:

   ```
   cluster_A> storage bridge run-cli -bridge bridge_A_1 -command
   firmwarerestart
   ```

Copyright information

Copyright © 2024 NetApp, Inc. All Rights Reserved. Printed in the U.S. No part of this document covered by copyright may be reproduced in any form or by any means—graphic, electronic, or mechanical, including photocopying, recording, taping, or storage in an electronic retrieval system—without prior written permission of the copyright owner.

Software derived from copyrighted NetApp material is subject to the following license and disclaimer:

THIS SOFTWARE IS PROVIDED BY NETAPP “AS IS” AND WITHOUT ANY EXPRESS OR IMPLIED WARRANTIES, INCLUDING, BUT NOT LIMITED TO, THE IMPLIED WARRANTIES OF MERCHANTABILITY AND FITNESS FOR A PARTICULAR PURPOSE, WHICH ARE HEREBY DISCLAIMED. IN NO EVENT SHALL NETAPP BE LIABLE FOR ANY DIRECT, INDIRECT, INCIDENTAL, SPECIAL, EXEMPLARY, OR CONSEQUENTIAL DAMAGES (INCLUDING, BUT NOT LIMITED TO, PROCUREMENT OF SUBSTITUTE GOODS OR SERVICES; LOSS OF USE, DATA, OR PROFITS; OR BUSINESS INTERRUPTION) HOWEVER CAUSED AND ON ANY THEORY OF LIABILITY, WHETHER IN CONTRACT, STRICT LIABILITY, OR TORT (INCLUDING NEGLIGENCE OR OTHERWISE) ARISING IN ANY WAY OUT OF THE USE OF THIS SOFTWARE, EVEN IF ADVISED OF THE POSSIBILITY OF SUCH DAMAGE.

NetApp reserves the right to change any products described herein at any time, and without notice. NetApp assumes no responsibility or liability arising from the use of products described herein, except as expressly agreed to in writing by NetApp. The use or purchase of this product does not convey a license under any patent rights, trademark rights, or any other intellectual property rights of NetApp.

The product described in this manual may be protected by one or more U.S. patents, foreign patents, or pending applications.

LIMITED RIGHTS LEGEND: Use, duplication, or disclosure by the government is subject to restrictions as set forth in subparagraph (b)(3) of the Rights in Technical Data -Noncommercial Items at DFARS 252.227-7013 (FEB 2014) and FAR 52.227-19 (DEC 2007).

Data contained herein pertains to a commercial product and/or commercial service (as defined in FAR 2.101) and is proprietary to NetApp, Inc. All NetApp technical data and computer software provided under this Agreement is commercial in nature and developed solely at private expense. The U.S. Government has a non-exclusive, non-transferrable, nonsublicensable, worldwide, limited irrevocable license to use the Data only in connection with and in support of the U.S. Government contract under which the Data was delivered. Except as provided herein, the Data may not be used, disclosed, reproduced, modified, performed, or displayed without the prior written approval of NetApp, Inc. United States Government license rights for the Department of Defense are limited to those rights identified in DFARS clause 252.227-7015(b) (FEB 2014).

Trademark information

NETAPP, the NETAPP logo, and the marks listed at http://www.netapp.com/TM are trademarks of NetApp, Inc. Other company and product names may be trademarks of their respective owners.