Implement a MetroCluster configuration with both disks and array LUNs

ONTAP MetroCluster

NetApp
March 22, 2024

This PDF was generated from https://docs.netapp.com/us-en/ontap-metrocluster/install-fc/concept_implementing_a_mcc_configuration_with_both_disks_and_array_luns.html on March 22, 2024. Always check docs.netapp.com for the latest.

Table of Contents

Implement a MetroCluster configuration with both disks and array LUNs 1
Implementing a MetroCluster configuration with both disks and array LUNs 1
Considerations when implementing a MetroCluster configuration with disks and array LUNs 1
Example of a two-node fabric-attached MetroCluster configuration with disks and array LUNs 3
Example of a four-node MetroCluster configuration with disks and array LUNs 4

Implement a MetroCluster configuration with both disks and array LUNs

Implementing a MetroCluster configuration with both disks and array LUNs

To implement a MetroCluster configuration with native disks and array LUNs, you must ensure that the ONTAP systems used in the configuration can attach to storage arrays.

A MetroCluster configuration with disks and array LUNs can have either two or four nodes. Although the four-node MetroCluster configuration must be fabric-attached, the two-node configuration can either be stretch or fabric-attached.

In the NetApp Interoperability Matrix Tool (IMT), you can use the Storage Solution field to select your MetroCluster solution. You use the **Component Explorer** to select the components and ONTAP version to refine your search. You can click **Show Results** to display the list of supported configurations that match the criteria.

Related information

For setting up a two-node fabric-attached MetroCluster configuration or a four-node MetroCluster configuration with native disks and array LUNs, you must use FC-to-SAS bridges to connect the ONTAP systems with the disk shelves through the FC switches. You can connect array LUNs through the FC switches to the ONTAP systems.

Example of a two-node fabric-attached MetroCluster configuration with disks and array LUNs

Example of a four-node MetroCluster configuration with disks and array LUNs

Considerations when implementing a MetroCluster configuration with disks and array LUNs

When planning your MetroCluster configuration for use with disks and array LUNs, you must consider various factors, such as the order of setting up access to storage, root aggregate location, and the usage of FC initiator ports, switches, and FC-to-SAS bridges.

Consider the information in the following table when planning your configuration:

Consideration	Guideline
Order of setting up access to the storage	You can set up access to either disks or array LUNs first. You must complete all setup for that type of storage and verify that it is set up correctly before setting up the other type of storage.

Location of the root aggregate	• If you are setting up a *new* MetroCluster deployment with both disks and array LUNs, you must create the root aggregate on native disks. When doing this, ensure that *at least one* disk shelf (with 24 disk drives) is set up at each of the sites. • If you are adding native disks to an *existing* MetroCluster configuration that uses array LUNs, the root aggregate can remain on an array LUN.
Using switches and FC-to-SAS bridges	FC-to-SAS bridges are required in four-node configurations and two-node fabric-attached configurations to connect the ONTAP systems to the disk shelves through the switches. You must use the same switches to connect to the storage arrays and the FC-to-SAS bridges.
Using FC initiator ports	The initiator ports used to connect to an FC-to-SAS bridge must be different from the ports used to connect to the switches, which connect to the storage arrays. A minimum of eight initiator ports is required to connect an ONTAP system to both disks and array LUNs.

Related information

- Switch configuration procedures and commands are different, depending on the switch vendor.

  Configuring the Brocade FC switches manually

  Configuring the Cisco FC switches manually

- You install and cable ATTO FibreBridge bridges and SAS disk shelves when adding new storage to the configuration.

  Installing FC-to-SAS bridges and SAS disk shelves

- Switch zoning defines paths between connected nodes. Configuring the zoning enables you to define which array LUNs can be viewed by a specific ONTAP system.

  Example of switch zoning in a four-node MetroCluster configuration with array LUNs

  Example of switch zoning in an eight-node MetroCluster configuration with array LUNs

- NetApp Hardware Universe

Example of a two-node fabric-attached MetroCluster configuration with disks and array LUNs

For setting up a two-node fabric-attached MetroCluster configuration with native disks and array LUNs, you must use FC-to-SAS bridges to connect the ONTAP systems with the disk shelves through the FC switches. You can connect array LUNs through the FC switches to the ONTAP systems.

The following illustrations represent examples of a two-node fabric-attached MetroCluster configuration with disks and array LUNs. They both represent the same MetroCluster configuration; the representations for disks and array LUNs are separated only for simplification.

In the following illustration showing the connectivity between ONTAP systems and disks, the HBA ports 1a through 1d are used for connectivity with disks through the FC-to-SAS bridges:

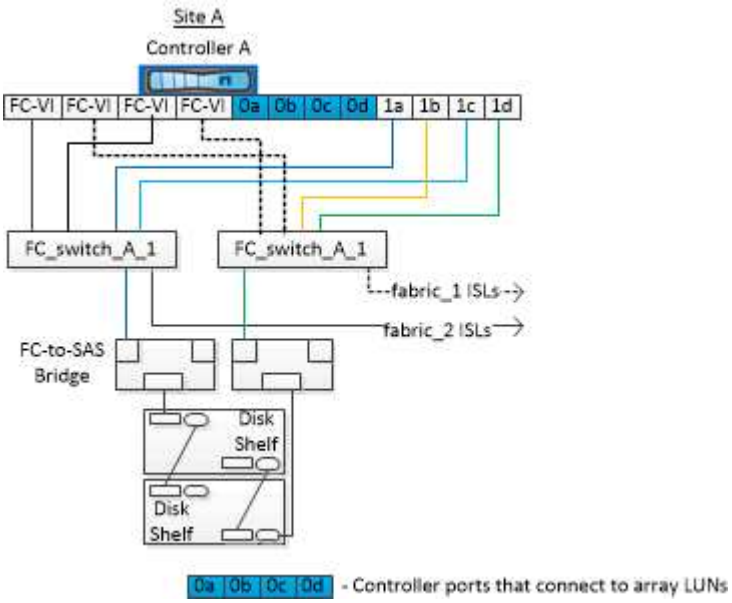

In the following illustration showing the connectivity between ONTAP systems and array LUNs, the HBA ports 0a through 0d are used for connectivity with array LUNs because ports 1a through 1d are used for connectivity with disks:

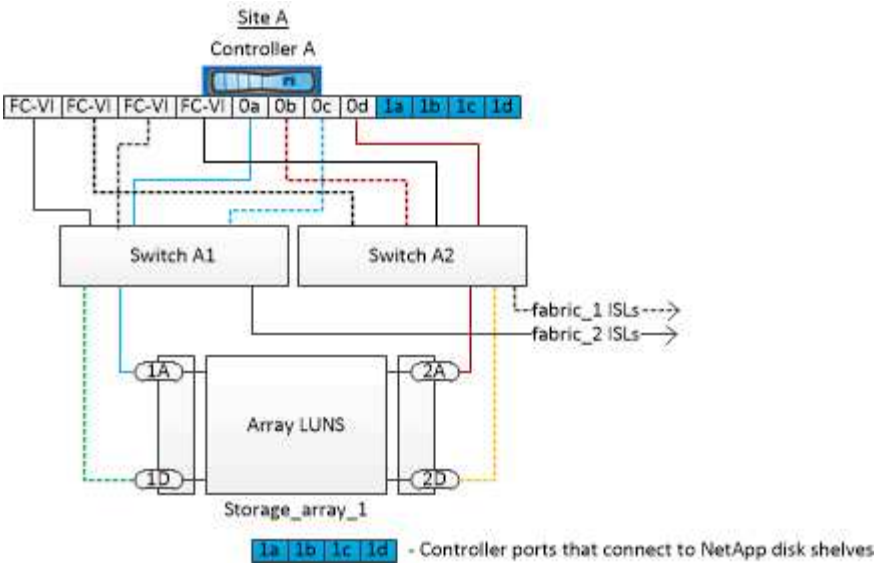

Example of a four-node MetroCluster configuration with disks and array LUNs

For setting up a four-node MetroCluster configuration with native disks and array LUNs, you must use FC-to-SAS bridges to connect the ONTAP systems with the disk shelves through the FC switches. You can connect array LUNs through the FC switches to the ONTAP systems.

A minimum of eight initiator ports is required for an ONTAP system to connect to both native disks and array LUNs.

The following illustrations represent examples of a MetroCluster configuration with disks and array LUNs. They both represent the same MetroCluster configuration; the representations for disks and array LUNs are separated only for simplification.

In the following illustration that shows the connectivity between ONTAP systems and disks, the HBA ports 1a through 1d are used for connectivity with disks through the FC-to-SAS bridges:

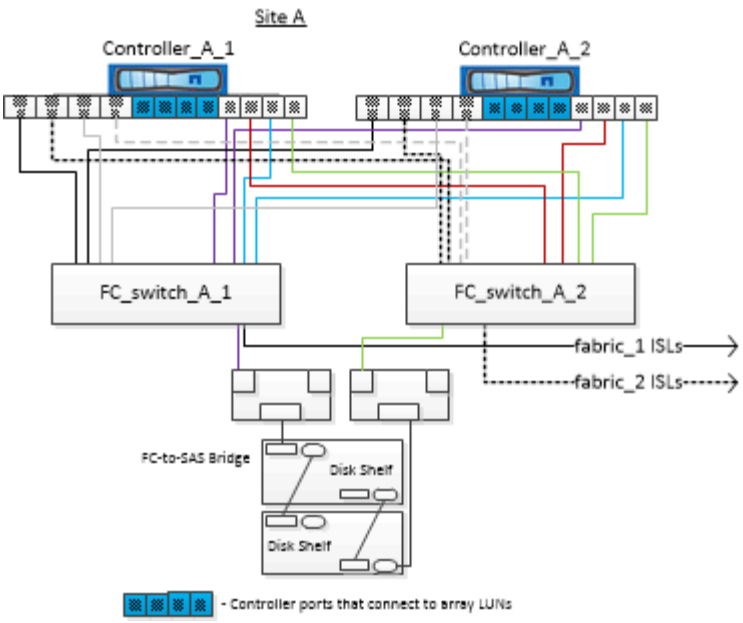

In the following illustration that shows the connectivity between ONTAP systems and array LUNs, the HBA ports 0a through 0d are used for connectivity with array LUNs because ports 1a through 1d are used for connectivity with disks:

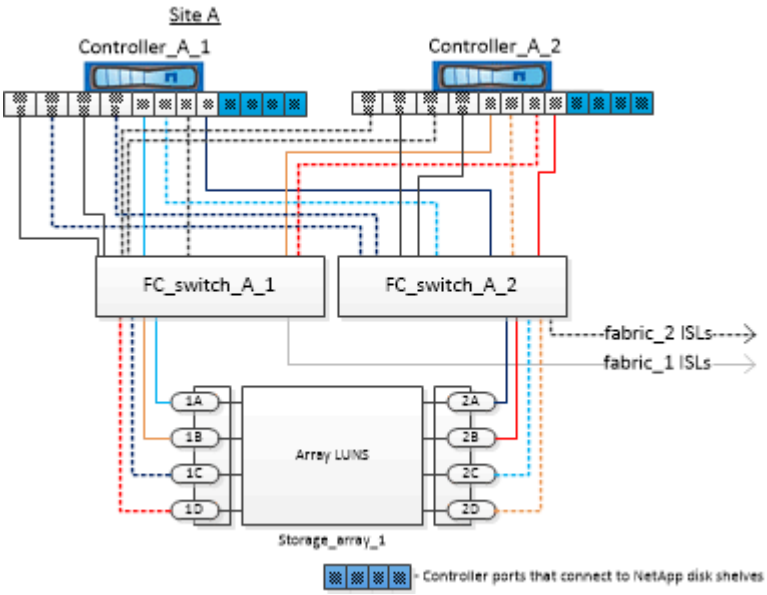

Copyright information

Copyright © 2024 NetApp, Inc. All Rights Reserved. Printed in the U.S. No part of this document covered by copyright may be reproduced in any form or by any means—graphic, electronic, or mechanical, including photocopying, recording, taping, or storage in an electronic retrieval system—without prior written permission of the copyright owner.

Software derived from copyrighted NetApp material is subject to the following license and disclaimer:

THIS SOFTWARE IS PROVIDED BY NETAPP “AS IS” AND WITHOUT ANY EXPRESS OR IMPLIED WARRANTIES, INCLUDING, BUT NOT LIMITED TO, THE IMPLIED WARRANTIES OF MERCHANTABILITY AND FITNESS FOR A PARTICULAR PURPOSE, WHICH ARE HEREBY DISCLAIMED. IN NO EVENT SHALL NETAPP BE LIABLE FOR ANY DIRECT, INDIRECT, INCIDENTAL, SPECIAL, EXEMPLARY, OR CONSEQUENTIAL DAMAGES (INCLUDING, BUT NOT LIMITED TO, PROCUREMENT OF SUBSTITUTE GOODS OR SERVICES; LOSS OF USE, DATA, OR PROFITS; OR BUSINESS INTERRUPTION) HOWEVER CAUSED AND ON ANY THEORY OF LIABILITY, WHETHER IN CONTRACT, STRICT LIABILITY, OR TORT (INCLUDING NEGLIGENCE OR OTHERWISE) ARISING IN ANY WAY OUT OF THE USE OF THIS SOFTWARE, EVEN IF ADVISED OF THE POSSIBILITY OF SUCH DAMAGE.

NetApp reserves the right to change any products described herein at any time, and without notice. NetApp assumes no responsibility or liability arising from the use of products described herein, except as expressly agreed to in writing by NetApp. The use or purchase of this product does not convey a license under any patent rights, trademark rights, or any other intellectual property rights of NetApp.

The product described in this manual may be protected by one or more U.S. patents, foreign patents, or pending applications.

LIMITED RIGHTS LEGEND: Use, duplication, or disclosure by the government is subject to restrictions as set forth in subparagraph (b)(3) of the Rights in Technical Data -Noncommercial Items at DFARS 252.227-7013 (FEB 2014) and FAR 52.227-19 (DEC 2007).

Data contained herein pertains to a commercial product and/or commercial service (as defined in FAR 2.101) and is proprietary to NetApp, Inc. All NetApp technical data and computer software provided under this Agreement is commercial in nature and developed solely at private expense. The U.S. Government has a non-exclusive, non-transferrable, nonsublicensable, worldwide, limited irrevocable license to use the Data only in connection with and in support of the U.S. Government contract under which the Data was delivered. Except as provided herein, the Data may not be used, disclosed, reproduced, modified, performed, or displayed without the prior written approval of NetApp, Inc. United States Government license rights for the Department of Defense are limited to those rights identified in DFARS clause 252.227-7015(b) (FEB 2014).

Trademark information

NETAPP, the NETAPP logo, and the marks listed at http://www.netapp.com/TM are trademarks of NetApp, Inc. Other company and product names may be trademarks of their respective owners.