Parts of a fabric MetroCluster configuration

ONTAP MetroCluster

NetApp
March 22, 2024

This PDF was generated from https://docs.netapp.com/us-en/ontap-metrocluster/install-fc/concept_parts_of_a_fabric_mcc_configuration.html on March 22, 2024. Always check docs.netapp.com for the latest.

Table of Contents

Parts of a fabric MetroCluster configuration . . . 1
Parts of a fabric MetroCluster configuration . . . 1
Illustration of the local HA pairs in a MetroCluster configuration . . . 5
Illustration of redundant FC-to-SAS bridges . . . 5
Redundant FC switch fabrics . . . 6
Illustration of the cluster peering network . . . 7

Parts of a fabric MetroCluster configuration

Parts of a fabric MetroCluster configuration

As you plan your MetroCluster configuration, you should understand the hardware components and how they interconnect.

Disaster Recovery (DR) groups

A fabric MetroCluster configuration consists of one or two DR groups, depending on the number of nodes in the MetroCluster configuration. Each DR group consists of four nodes.

- An eight-node MetroCluster configuration consists of two DR groups.
- A four-node MetroCluster configuration consists of one DR group.

The following illustration shows the organization of nodes in an eight-node MetroCluster configuration:

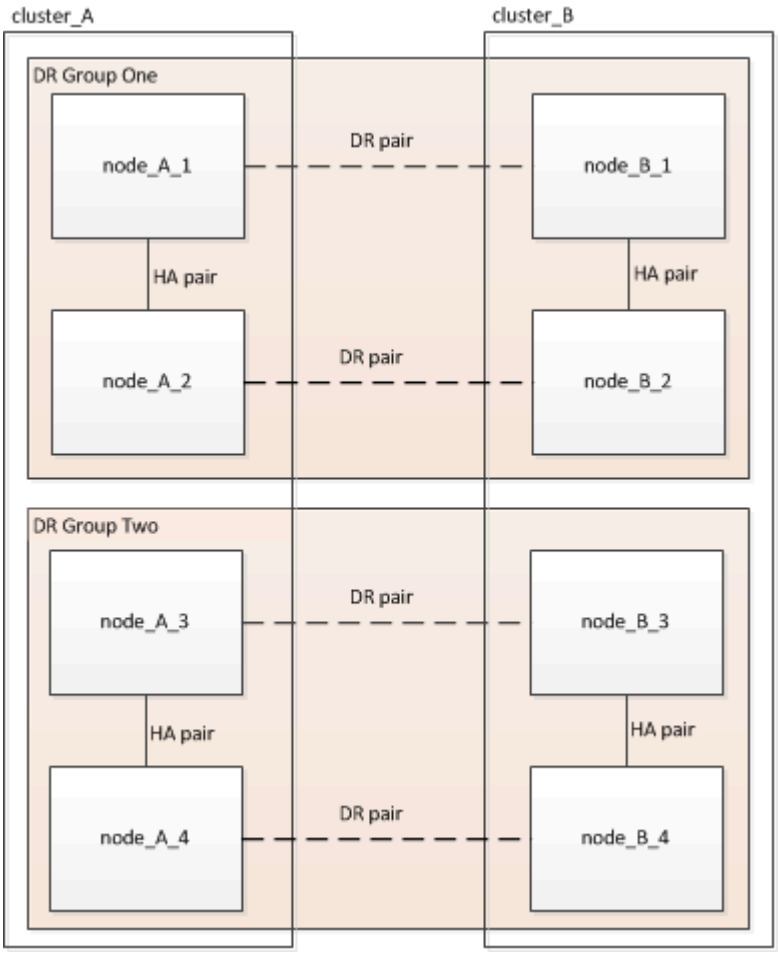

The following illustration shows the organization of nodes in a four-node MetroCluster configuration:

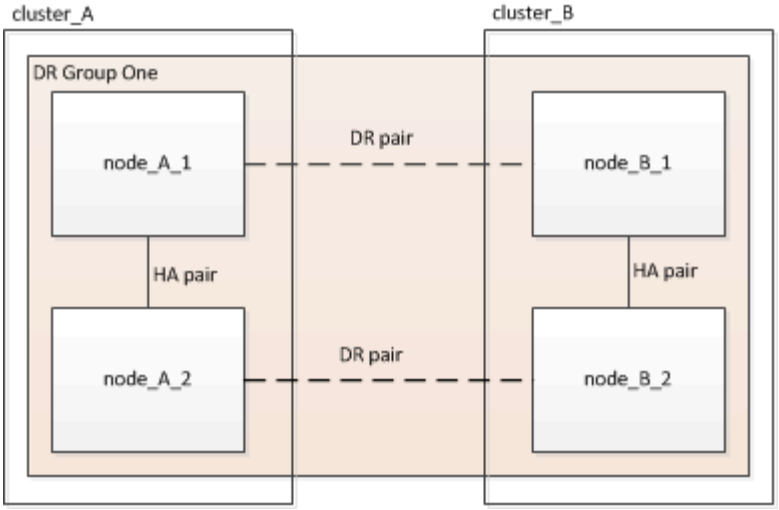

Key hardware elements

A MetroCluster configuration includes the following key hardware elements:

- Storage controllers

  The storage controllers are not connected directly to the storage but connect to two redundant FC switch fabrics.

- FC-to-SAS bridges

  The FC-to-SAS bridges connect the SAS storage stacks to the FC switches, providing bridging between the two protocols.

- FC switches

  The FC switches provide the long-haul backbone ISL between the two sites. The FC switches provide the two storage fabrics that allow data mirroring to the remote storage pools.

- Cluster peering network

  The cluster peering network provides connectivity for mirroring of the cluster configuration, which includes storage virtual machine (SVM) configuration. The configuration of all of the SVMs on one cluster is mirrored to the partner cluster.

Eight-node fabric MetroCluster configuration

An eight-node configuration consists of two clusters, one at each geographically separated site. cluster_A is located at the first MetroCluster site. cluster_B is located at the second MetroCluster site. Each site has one SAS storage stack. Additional storage stacks are supported, but only one is shown at each site. The HA pairs are configured as switchless clusters, without cluster interconnect switches. A switched configuration is supported, but is not shown.

An eight-node configuration includes the following connections:

- FC connections from each controller's HBAs and FC-VI adapters to each of the FC switches
- An FC connection from each FC-to-SAS bridge to an FC switch

- SAS connections between each SAS shelf and from the top and bottom of each stack to an FC-to-SAS bridge
- An HA interconnect between each controller in the local HA pair

  If the controllers support a single-chassis HA pair, the HA interconnect is internal, occurring through the backplane, meaning that an external interconnect is not required.

- Ethernet connections from the controllers to the customer-provided network that is used for cluster peering

  SVM configuration is replicated over the cluster peering network.

- A cluster interconnect between each controller in the local cluster

Four-node fabric MetroCluster configuration

The following illustration shows a simplified view of a four-node fabric MetroCluster configuration. For some connections, a single line represents multiple, redundant connections between the components. Data and management network connections are not shown.

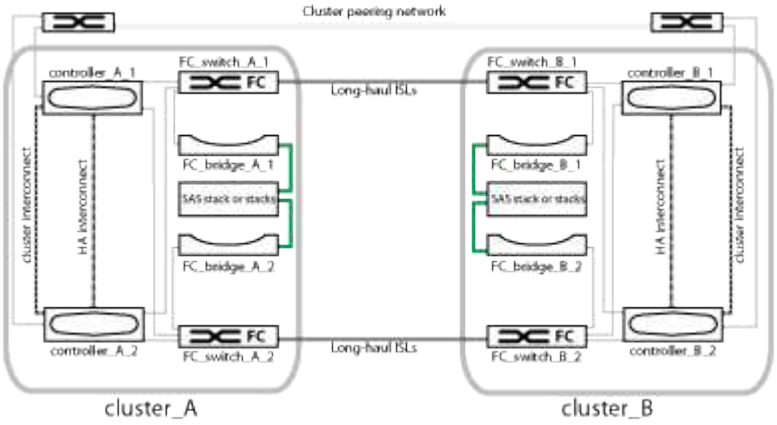

The following illustration shows a more detailed view of the connectivity in a single MetroCluster cluster (both clusters have the same configuration):

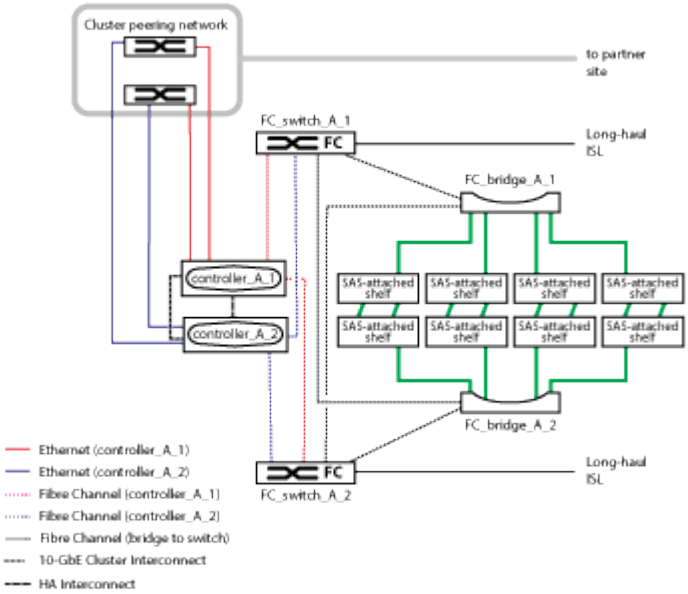

Two-node fabric MetroCluster configuration

The following illustration shows a simplified view of a two-node fabric MetroCluster configuration. For some connections, a single line represents multiple, redundant connections between the components. Data and management network connections are not shown.

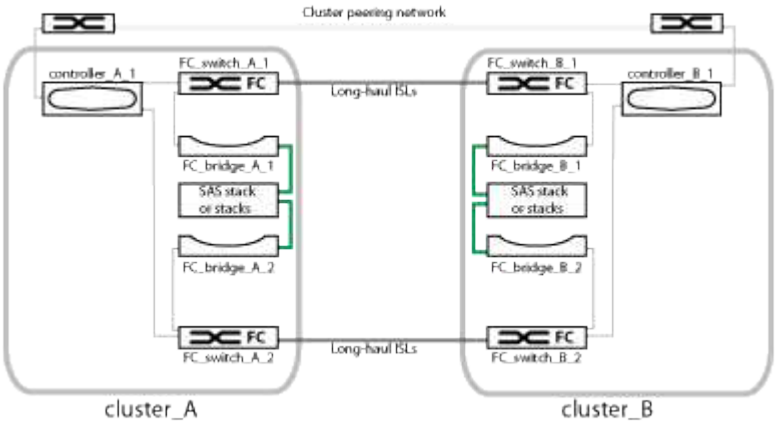

A two-node configuration consists of two clusters, one at each geographically separated site. cluster_A is located at the first MetroCluster site. cluster_B is located at the second MetroCluster site. Each site has one SAS storage stack. Additional storage stacks are supported, but only one is shown at each site.

> In a two-node configuration, the nodes are not configured as an HA pair.

The following illustration shows a more detailed view of the connectivity in a single MetroCluster cluster (both clusters have the same configuration):

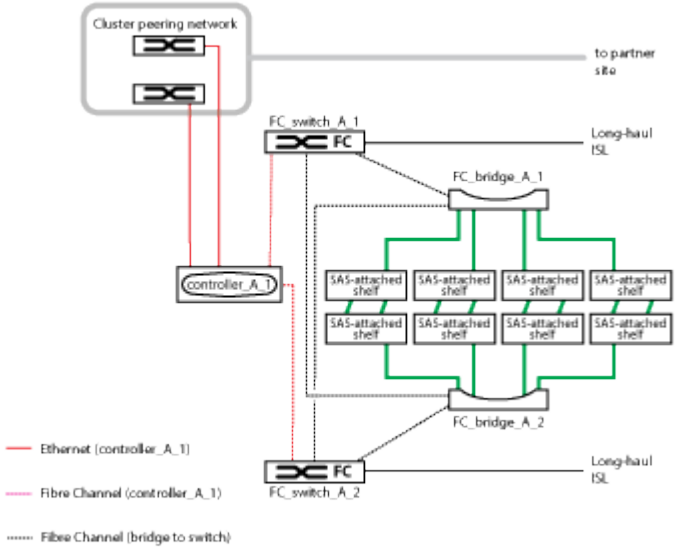

A two-node configuration includes the following connections:

- FC connections between the FC-VI adapter on each controller module
- FC connections from each controller module's HBAs to the FC-to-SAS bridge for each SAS shelf stack
- SAS connections between each SAS shelf and from the top and bottom of each stack to an FC-to-SAS bridge
- Ethernet connections from the controllers to the customer-provided network that is used for cluster peering

SVM configuration is replicated over the cluster peering network.

Illustration of the local HA pairs in a MetroCluster configuration

In eight-node or four-node MetroCluster configurations, each site consists of storage controllers configured as one or two HA pairs. This allows local redundancy so that if one storage controller fails, its local HA partner can take over. Such failures can be handled without a MetroCluster switchover operation.

Local HA failover and giveback operations are performed with the storage failover commands, in the same manner as a non-MetroCluster configuration.

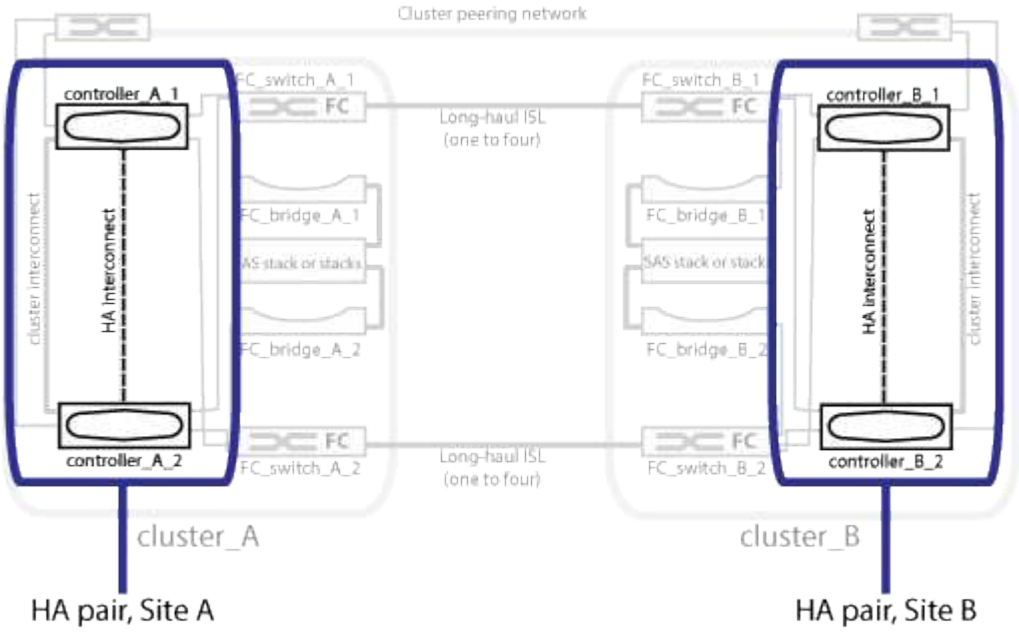

Related information

Illustration of redundant FC-to-SAS bridges

Redundant FC switch fabrics

Illustration of the cluster peering network

ONTAP concepts

Illustration of redundant FC-to-SAS bridges

FC-to-SAS bridges provide protocol bridging between SAS attached disks and the FC switch fabric.

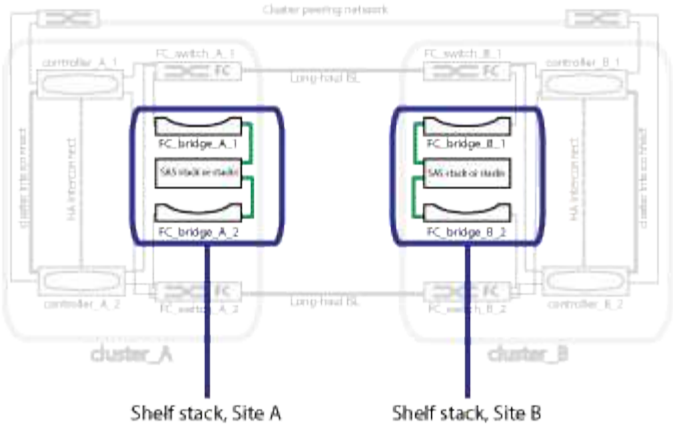

Related information

Illustration of the local HA pairs in a MetroCluster configuration

Redundant FC switch fabrics

Illustration of the cluster peering network

Redundant FC switch fabrics

Each switch fabric includes inter-switch links (ISLs) that connect the sites. Data is replicated from site-to-site over the ISL. Each switch fabric must be on different physical paths for redundancy.

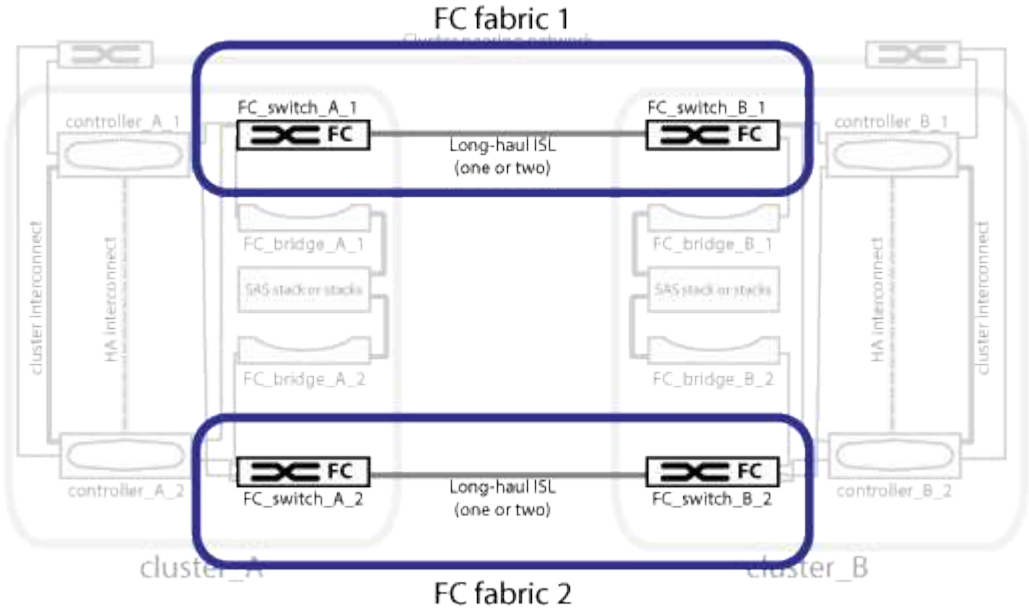

Related information

Illustration of the local HA pairs in a MetroCluster configuration

Illustration of redundant FC-to-SAS bridges

Illustration of the cluster peering network

Illustration of the cluster peering network

The two clusters in the MetroCluster configuration are peered through a customer-provided cluster peering network. Cluster peering supports the synchronous mirroring of storage virtual machines (SVMs, formerly known as Vservers) between the sites.

Intercluster LIFs must be configured on each node in the MetroCluster configuration, and the clusters must be configured for peering. The ports with the intercluster LIFs are connected to the customer-provided cluster peering network. Replication of the SVM configuration is carried out over this network through the Configuration Replication Service.

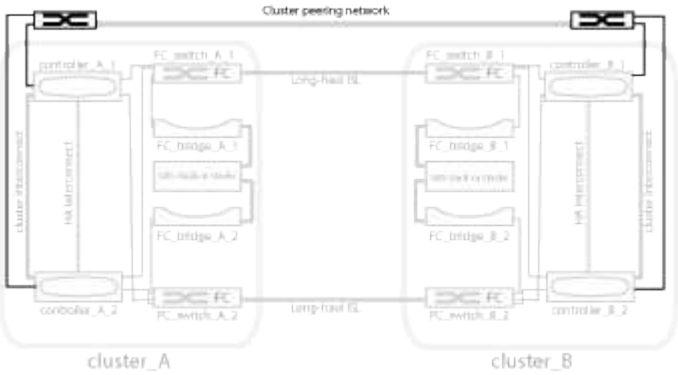

Related information

Illustration of the local HA pairs in a MetroCluster configuration

Illustration of redundant FC-to-SAS bridges

Redundant FC switch fabrics

Cluster and SVM peering express configuration

Considerations for configuring cluster peering

Cabling the cluster peering connections

Peering the clusters

Copyright information

Copyright © 2024 NetApp, Inc. All Rights Reserved. Printed in the U.S. No part of this document covered by copyright may be reproduced in any form or by any means—graphic, electronic, or mechanical, including photocopying, recording, taping, or storage in an electronic retrieval system—without prior written permission of the copyright owner.

Software derived from copyrighted NetApp material is subject to the following license and disclaimer:

THIS SOFTWARE IS PROVIDED BY NETAPP “AS IS” AND WITHOUT ANY EXPRESS OR IMPLIED WARRANTIES, INCLUDING, BUT NOT LIMITED TO, THE IMPLIED WARRANTIES OF MERCHANTABILITY AND FITNESS FOR A PARTICULAR PURPOSE, WHICH ARE HEREBY DISCLAIMED. IN NO EVENT SHALL NETAPP BE LIABLE FOR ANY DIRECT, INDIRECT, INCIDENTAL, SPECIAL, EXEMPLARY, OR CONSEQUENTIAL DAMAGES (INCLUDING, BUT NOT LIMITED TO, PROCUREMENT OF SUBSTITUTE GOODS OR SERVICES; LOSS OF USE, DATA, OR PROFITS; OR BUSINESS INTERRUPTION) HOWEVER CAUSED AND ON ANY THEORY OF LIABILITY, WHETHER IN CONTRACT, STRICT LIABILITY, OR TORT (INCLUDING NEGLIGENCE OR OTHERWISE) ARISING IN ANY WAY OUT OF THE USE OF THIS SOFTWARE, EVEN IF ADVISED OF THE POSSIBILITY OF SUCH DAMAGE.

NetApp reserves the right to change any products described herein at any time, and without notice. NetApp assumes no responsibility or liability arising from the use of products described herein, except as expressly agreed to in writing by NetApp. The use or purchase of this product does not convey a license under any patent rights, trademark rights, or any other intellectual property rights of NetApp.

The product described in this manual may be protected by one or more U.S. patents, foreign patents, or pending applications.

LIMITED RIGHTS LEGEND: Use, duplication, or disclosure by the government is subject to restrictions as set forth in subparagraph (b)(3) of the Rights in Technical Data -Noncommercial Items at DFARS 252.227-7013 (FEB 2014) and FAR 52.227-19 (DEC 2007).

Data contained herein pertains to a commercial product and/or commercial service (as defined in FAR 2.101) and is proprietary to NetApp, Inc. All NetApp technical data and computer software provided under this Agreement is commercial in nature and developed solely at private expense. The U.S. Government has a non-exclusive, non-transferrable, nonsublicensable, worldwide, limited irrevocable license to use the Data only in connection with and in support of the U.S. Government contract under which the Data was delivered. Except as provided herein, the Data may not be used, disclosed, reproduced, modified, performed, or displayed without the prior written approval of NetApp, Inc. United States Government license rights for the Department of Defense are limited to those rights identified in DFARS clause 252.227-7015(b) (FEB 2014).

Trademark information

NETAPP, the NETAPP logo, and the marks listed at http://www.netapp.com/TM are trademarks of NetApp, Inc. Other company and product names may be trademarks of their respective owners.