Prepare for transition from a MetroCluster FC to a MetroCluster IP configuration

ONTAP MetroCluster

NetApp
March 22, 2024

This PDF was generated from https://docs.netapp.com/us-en/ontap-metrocluster/transition/concept_requirements_for_fc_to_ip_transition_mcc.html on March 22, 2024.
Always check docs.netapp.com for the latest.

Table of Contents

Prepare for transition from a MetroCluster FC to a MetroCluster IP configuration . . . 1
Requirements for nondisruptive FC-to-IP transition . . . 1
How transition impacts the MetroCluster hardware components . . . 1
Workflow for nondisruptive MetroCluster transition . . . 2
Considerations for IP switches . . . 9
Switchover, healing, and switchback operations during nondisruptive transition . . . 9
Alert messages and tool support during transition . . . 10
Example naming in this procedure . . . 10

Prepare for transition from a MetroCluster FC to a MetroCluster IP configuration

Requirements for nondisruptive FC-to-IP transition

Before starting the transition process, you must make sure the configuration meets the requirements.

- If you have an eight-node configuration, all nodes must be running ONTAP 9.13.1 or later.
- If you have a four-node configuration, all nodes must be running ONTAP 9.8 or later.
- The existing and new platforms must be a supported combination for transition.

  Supported platforms for nondisruptive transition

- It must support a switched cluster configuration.

  NetApp Hardware Universe

- It must meet all requirements and cabling as described in the *MetroCluster Installation and Configuration* procedures.

  Fabric-attached MetroCluster installation and configuration

  Stretch MetroCluster installation and configuration

How transition impacts the MetroCluster hardware components

After completing the transition procedure, key components of the existing MetroCluster configuration have been replaced or reconfigured.

- **Controller modules**

  The existing controller modules are replaced by new controller modules. The existing controller modules are decommissioned at the end of the transition procedures.

- **Storage shelves**

  Data is moved from the old shelves to the new shelves. The old shelves are decommissioned at the end of the transition procedures.

- **MetroCluster (back-end) and cluster switches**

  The back-end switch functionality is replaced by the IP switch fabric. If the MetroCluster FC configuration included FC switches and FC-to-SAS bridges, they are decommissioned at the end of this procedure.

  If the MetroCluster FC configuration used cluster switches for the cluster interconnect, in some cases they can be reused to provide the back-end IP switch fabric. Reused cluster switches must be reconfigured with platform and switch-specific RCFs. procedures.

If the MetroCluster FC configuration did not use cluster switches, new IP switches are added to provide the backend switch fabric.

Considerations for IP switches

- **Cluster peering network**

  The existing customer-provided cluster peering network can be used for the new MetroCluster IP configuration. Cluster peering is configured on the MetroCluster IP nodes as part of the transition procedure.

Workflow for nondisruptive MetroCluster transition

You must follow the specific workflow to ensure a successful nondisruptive transition. Choose the workflow for your configuration:

- Four-node FC configuration transition workflow
- Eight-node FC configuration transition workflow

Four-node FC configuration transition workflow

The transition process begins with a healthy four-node MetroCluster FC configuration.

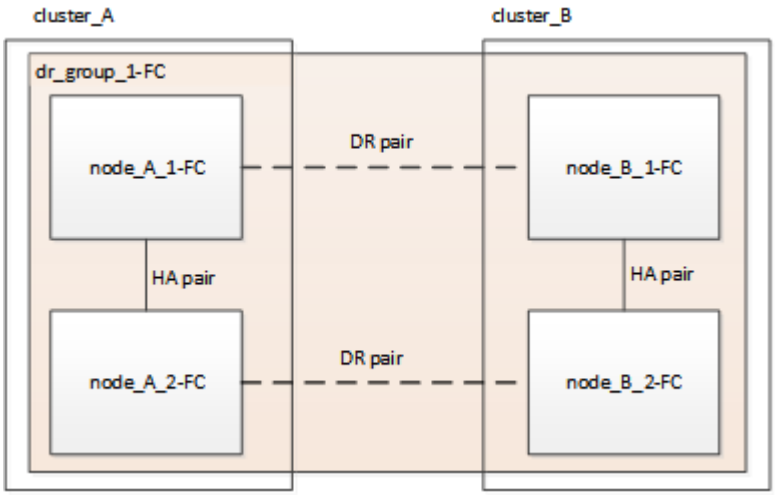

The new MetroCluster IP nodes are added as a second DR group.

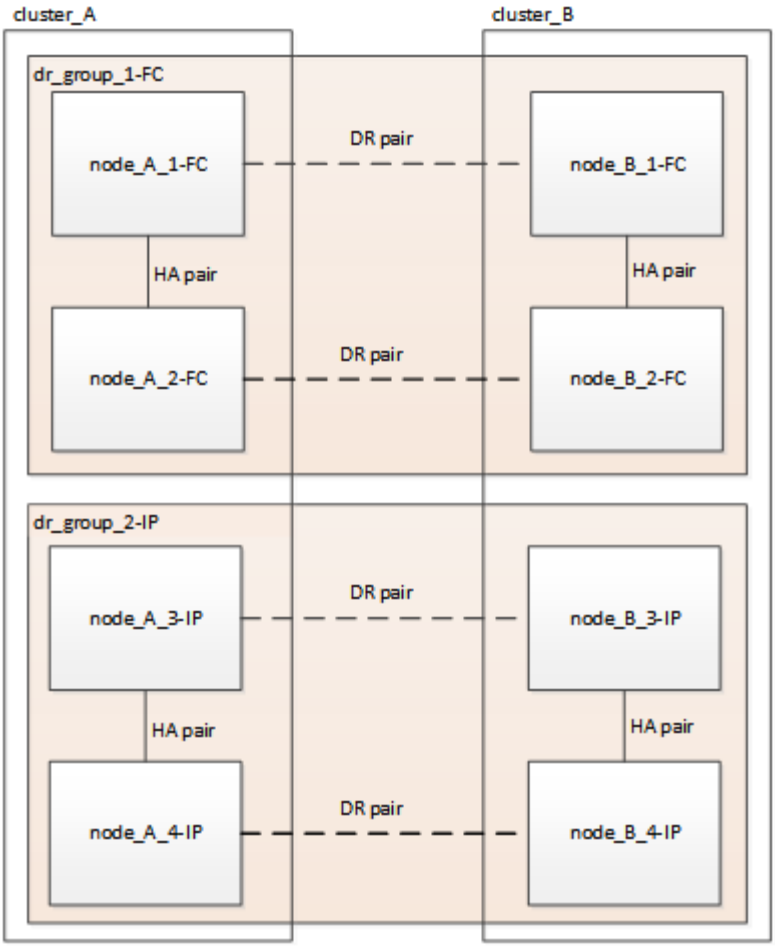

Data is transferred from the old DR group to the new DR group, and then the old nodes and their storage are removed from the configuration and decommissioned. The process ends with a four-node MetroCluster IP configuration.

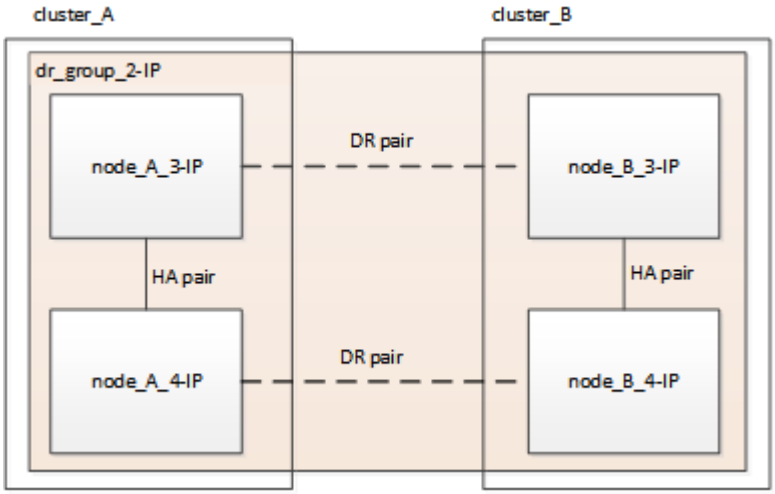

Eight-node FC configuration transition workflow

The transition process begins with a healthy eight-node MetroCluster FC configuration.

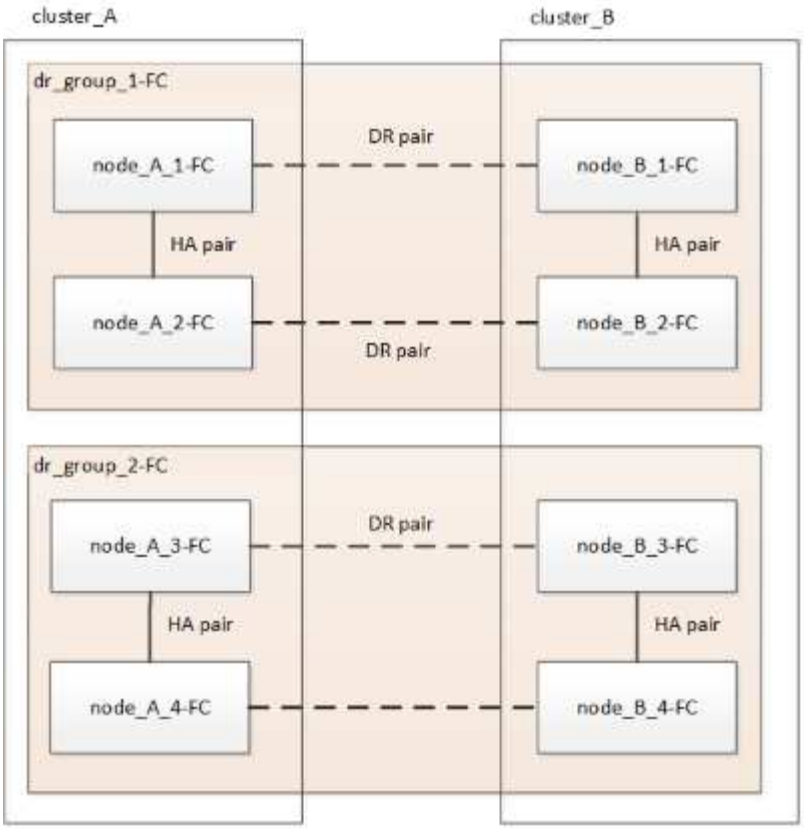

The new MetroCluster IP nodes are added as a third DR group.

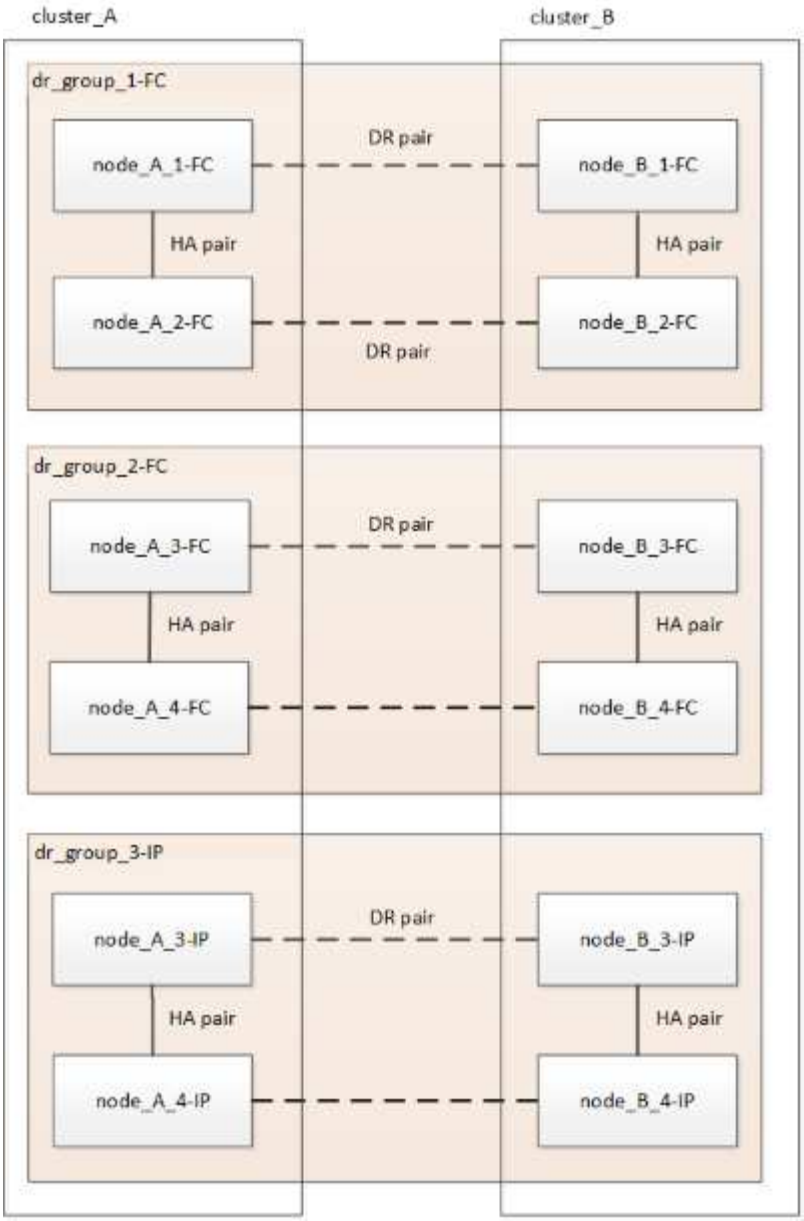

Data is transferred from DR_group_1-FC to DR_group_1-IP, and then the old nodes and their storage are removed from the configuration and decommissioned.

> If you want to transition from an eight-node FC configuration to a four-node IP configuration, you must transition all the data in DR_group_1-FC and DR_group_2-FC to the new IP DR group (DR_group_1-IP). You can then decommission both FC DR groups. After the FC DR groups have been removed, the process ends with a four-node MetroCluster IP configuration.

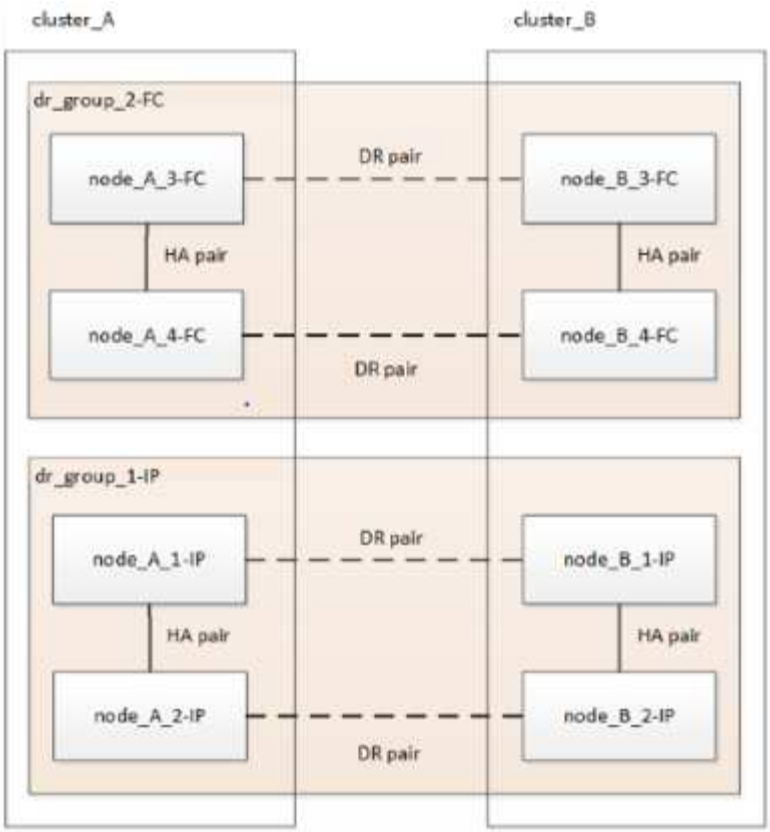

Add the remaining MetroCluster IP nodes to the existing MetroCluster configuration. Repeat the process to transfer data from the DR_group_2-FC nodes to the DR_group_2-IP nodes.

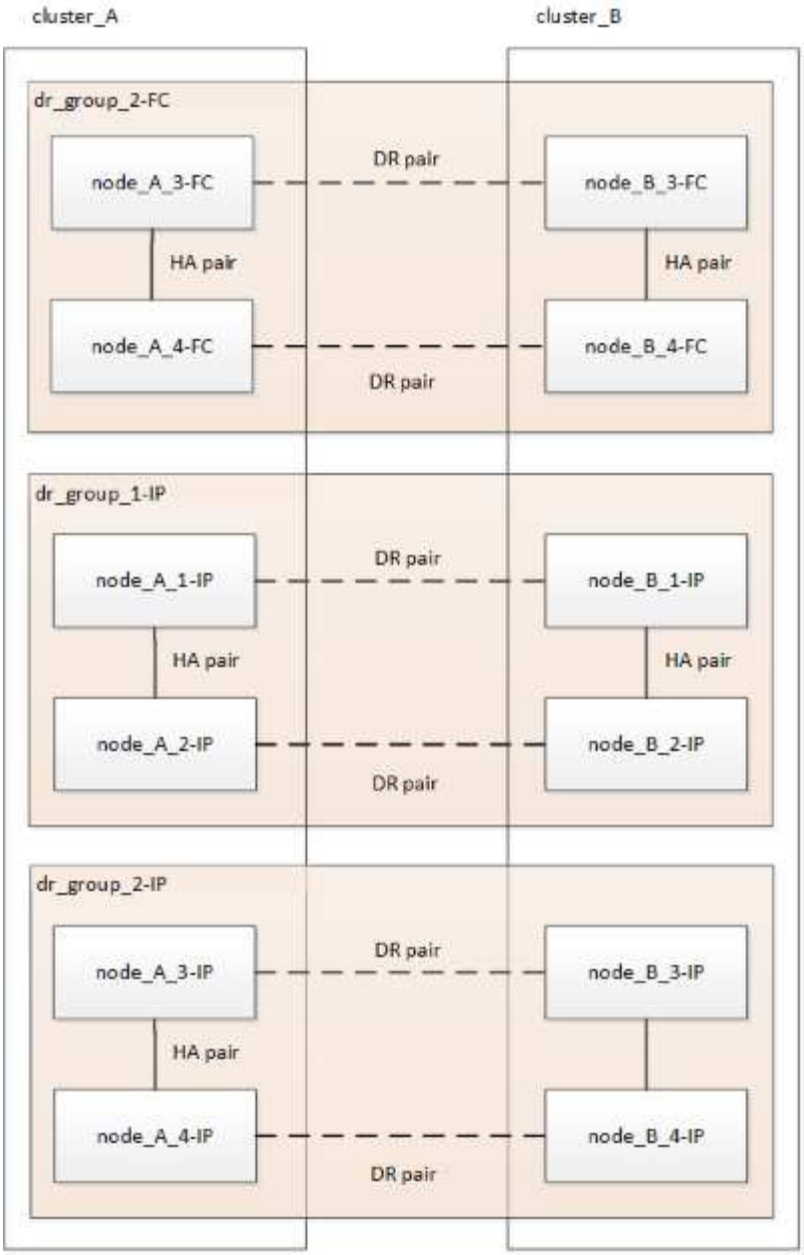

After removing DR_group_2-FC, the process ends with an eight-node MetroCluster IP configuration.

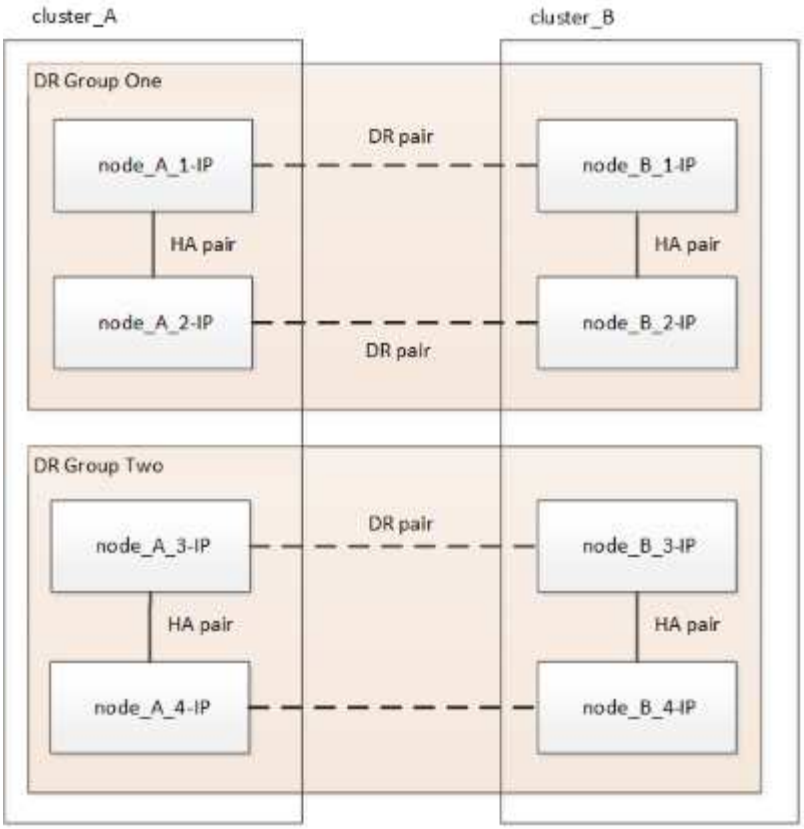

Transition process workflow

You will use the following workflow to transition the MetroCluster configuration.

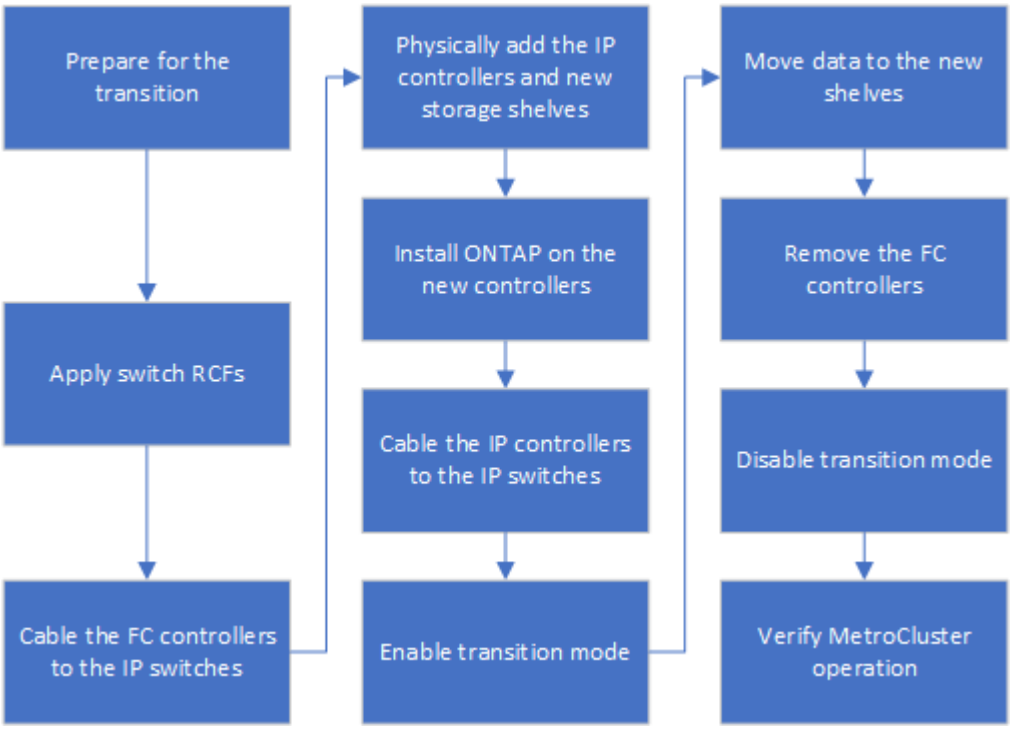

Considerations for IP switches

You must ensure the IP switches are supported. If the existing switch model is supported by both the original MetroCluster FC configuration and the new MetroCluster IP configuration, you can reuse the existing switches.

Supported switches

You must use NetApp-provided switches.

- The use of MetroCluster-compliant switches (switches that are not validated and provided by NetApp) is not supported for transition.
- The IP switches must be supported as a cluster switch by both the MetroCluster FC configuration and the MetroCluster IP configuration.
- The IP switches can be reused in the new MetroCluster IP configuration if the MetroCluster FC is a switched cluster and the IP cluster switches are supported by the MetroCluster IP configuration.
- New IP switches are usually used in the following cases:
  - The MetroCluster FC is a switchless cluster, so new switches are required.
  - The MetroCluster FC is a switched cluster but the existing IP switches are not supported in the MetroCluster IP configuration.
  - You want to use different switches for the MetroCluster IP configuration.

See the *NetApp Hardware Universe* for information on platform model and switch support.

NetApp Hardware Universe

Switchover, healing, and switchback operations during nondisruptive transition

Depending on the stage of the transition process, the MetroCluster switchover, healing, and switchback operations use either the MetroCluster FC or MetroCluster IP workflow.

The following table shows what workflows are used at different stages of the transition process. In some stages, switchover and switchback are not supported.

- In the MetroCluster FC workflow, the switchover, healing, and switchback steps are those used by a MetroCluster FC configuration.
- In the MetroCluster IP workflow, the switchover, healing, and switchback steps are those used by a MetroCluster IP configuration.
- In the unified workflow, when both the FC and IP nodes are configured, the steps depend on whether NSO or USO is performed. The details are shown in the table.

For information on the MetroCluster FC and IP workflows for switchover, healing, and switchback, see Understanding MetroCluster data protection and disaster recovery.

Automatic unplanned switchover is not available during the transition process.

Stage of transition	Negotiated switchover uses this workflow…	Unplanned switchover uses this workflow…
Before the MetroCluster IP nodes have joined the cluster	MetroCluster FC	MetroCluster FC
After the MetroCluster IP nodes have joined the cluster, before the `metrocluster configure` command is performed	Not supported	MetroCluster FC
After the `metrocluster configure` command has been issued. Volume move can be in progress.	Unified: All remote site nodes remain up and healing is done automatically	Unified: • Mirrored aggregates owned by the MetroCluster FC node are mirrored if storage is accessible, all others are degraded after switchover. • All remote site nodes are able to boot up. • The `heal aggregate` and `heal root` commands must be run manually.
The MetroCluster FC nodes have been unconfigured.	Not supported	MetroCluster IP
The `cluster unjoin` command has been performed on the MetroCluster FC nodes.	MetroCluster IP	MetroCluster IP

Alert messages and tool support during transition

You may notice alert messages during transition. These alerts can be safely ignored. Also, some tools are not available during transition.

- ARS may alert during transition.

  These alerts can be ignored and should disappear once the transition has finished.

- OnCommand Unified Manager may alert during transition.

  These alerts can be ignored and should disappear once the transition has finished.

- Config Advisor is not supported during transition.
- System Manager is not supported during transition.

Example naming in this procedure

This procedure uses example names throughout to identify the DR groups, nodes, and

switches involved.

DR groups	cluster_A at site_A	cluster_B at site_B
dr_group_1-FC	• node_A_1-FC • node_A_2-FC	• node_B_1-FC • node_B_2-FC
dr_group_2-IP	• node_A_3-IP • node_A_4-IP	• node_B_3-IP • node_B_4-IP
Switches	Initial switches (if fabric-attached configuration:) • switch_A_1-FC • switch_A_2-FC MetroCluster IP switches: • switch_A_1-IP • switch_A_2-IP	Initial switches (if fabric-attached configuration): • switch_B_1-FC • switch_B_2-FC MetroCluster IP switches: • switch_B_1-IP • switch_B_2-IP

Copyright information

Copyright © 2024 NetApp, Inc. All Rights Reserved. Printed in the U.S. No part of this document covered by copyright may be reproduced in any form or by any means—graphic, electronic, or mechanical, including photocopying, recording, taping, or storage in an electronic retrieval system—without prior written permission of the copyright owner.

Software derived from copyrighted NetApp material is subject to the following license and disclaimer:

THIS SOFTWARE IS PROVIDED BY NETAPP “AS IS” AND WITHOUT ANY EXPRESS OR IMPLIED WARRANTIES, INCLUDING, BUT NOT LIMITED TO, THE IMPLIED WARRANTIES OF MERCHANTABILITY AND FITNESS FOR A PARTICULAR PURPOSE, WHICH ARE HEREBY DISCLAIMED. IN NO EVENT SHALL NETAPP BE LIABLE FOR ANY DIRECT, INDIRECT, INCIDENTAL, SPECIAL, EXEMPLARY, OR CONSEQUENTIAL DAMAGES (INCLUDING, BUT NOT LIMITED TO, PROCUREMENT OF SUBSTITUTE GOODS OR SERVICES; LOSS OF USE, DATA, OR PROFITS; OR BUSINESS INTERRUPTION) HOWEVER CAUSED AND ON ANY THEORY OF LIABILITY, WHETHER IN CONTRACT, STRICT LIABILITY, OR TORT (INCLUDING NEGLIGENCE OR OTHERWISE) ARISING IN ANY WAY OUT OF THE USE OF THIS SOFTWARE, EVEN IF ADVISED OF THE POSSIBILITY OF SUCH DAMAGE.

NetApp reserves the right to change any products described herein at any time, and without notice. NetApp assumes no responsibility or liability arising from the use of products described herein, except as expressly agreed to in writing by NetApp. The use or purchase of this product does not convey a license under any patent rights, trademark rights, or any other intellectual property rights of NetApp.

The product described in this manual may be protected by one or more U.S. patents, foreign patents, or pending applications.

LIMITED RIGHTS LEGEND: Use, duplication, or disclosure by the government is subject to restrictions as set forth in subparagraph (b)(3) of the Rights in Technical Data -Noncommercial Items at DFARS 252.227-7013 (FEB 2014) and FAR 52.227-19 (DEC 2007).

Data contained herein pertains to a commercial product and/or commercial service (as defined in FAR 2.101) and is proprietary to NetApp, Inc. All NetApp technical data and computer software provided under this Agreement is commercial in nature and developed solely at private expense. The U.S. Government has a non-exclusive, non-transferrable, nonsublicensable, worldwide, limited irrevocable license to use the Data only in connection with and in support of the U.S. Government contract under which the Data was delivered. Except as provided herein, the Data may not be used, disclosed, reproduced, modified, performed, or displayed without the prior written approval of NetApp, Inc. United States Government license rights for the Department of Defense are limited to those rights identified in DFARS clause 252.227-7015(b) (FEB 2014).

Trademark information

NETAPP, the NETAPP logo, and the marks listed at http://www.netapp.com/TM are trademarks of NetApp, Inc. Other company and product names may be trademarks of their respective owners.