Switch zoning in a MetroCluster configuration with array LUNs

ONTAP MetroCluster

NetApp
March 22, 2024

This PDF was generated from https://docs.netapp.com/us-en/ontap-metrocluster/install-fc/reference_requirements_for_switch_zoning_in_a_mcc_configuration_with_array_luns.html on March 22, 2024. Always check docs.netapp.com for the latest.

Table of Contents

Switch zoning in a MetroCluster configuration with array LUNs 1
Requirements for switch zoning in a MetroCluster configuration with array LUNs 1
Example of switch zoning in a two-node MetroCluster configuration with array LUNs 2
Example of switch zoning in a four-node MetroCluster configuration with array LUNs 4
Example of switch zoning in an eight-node MetroCluster configuration with array LUNs 7

Switch zoning in a MetroCluster configuration with array LUNs

Requirements for switch zoning in a MetroCluster configuration with array LUNs

When using switch zoning in a MetroCluster configuration with array LUNs, you must ensure that certain basic requirements are followed.

The requirements for switch zoning in a MetroCluster configuration with array LUNs are as follows:

- The MetroCluster configuration must follow the single-initiator to single-target zoning scheme.

  Single-initiator to single-target zoning limits each zone to a single FC initiator port and a single target port.

- The FC-VI ports must be zoned end-to-end across the fabric.
- Sharing of multiple initiator ports with a single target port can cause performance issues.

  Similarly, sharing of multiple target ports with a single initiator port can cause performance issues.

- You must have performed a basic configuration of the FC switches used in the MetroCluster configuration.
  - Configure the Cisco FC switches manually
  - Configure Brocade FC switches manually

Shared initiator and shared target support for MetroCluster configuration with array LUNs

Being able to share a given FC initiator port or target ports is useful for organizations that want to minimize the number of initiator or target ports used. For example, an organization that expects low I/O usage over an FC initiator port or target ports might prefer to share FC initiator port or target ports instead of dedicating each FC initiator port to a single target port.

However sharing of initiator or target ports can adversely affect performance.

Related information

How to support Shared Initiator and Shared Target configuration with Array LUNs in a MetroCluster environment

- Switch zoning defines paths between connected nodes. Configuring the zoning enables you to define which array LUNs can be viewed by specific ONTAP systems.

  Example of switch zoning in a two-node MetroCluster configuration with array LUNs

  Example of switch zoning in a four-node MetroCluster configuration with array LUNs

  Example of switch zoning in an eight-node MetroCluster configuration with array LUNs

Example of switch zoning in a two-node MetroCluster configuration with array LUNs

Switch zoning defines paths between connected nodes. Configuring the zoning enables you to define which array LUNs can be viewed by specific ONTAP systems.

You can use the following example as a reference when determining zoning for a two-node fabric-attached MetroCluster configuration with array LUNs:

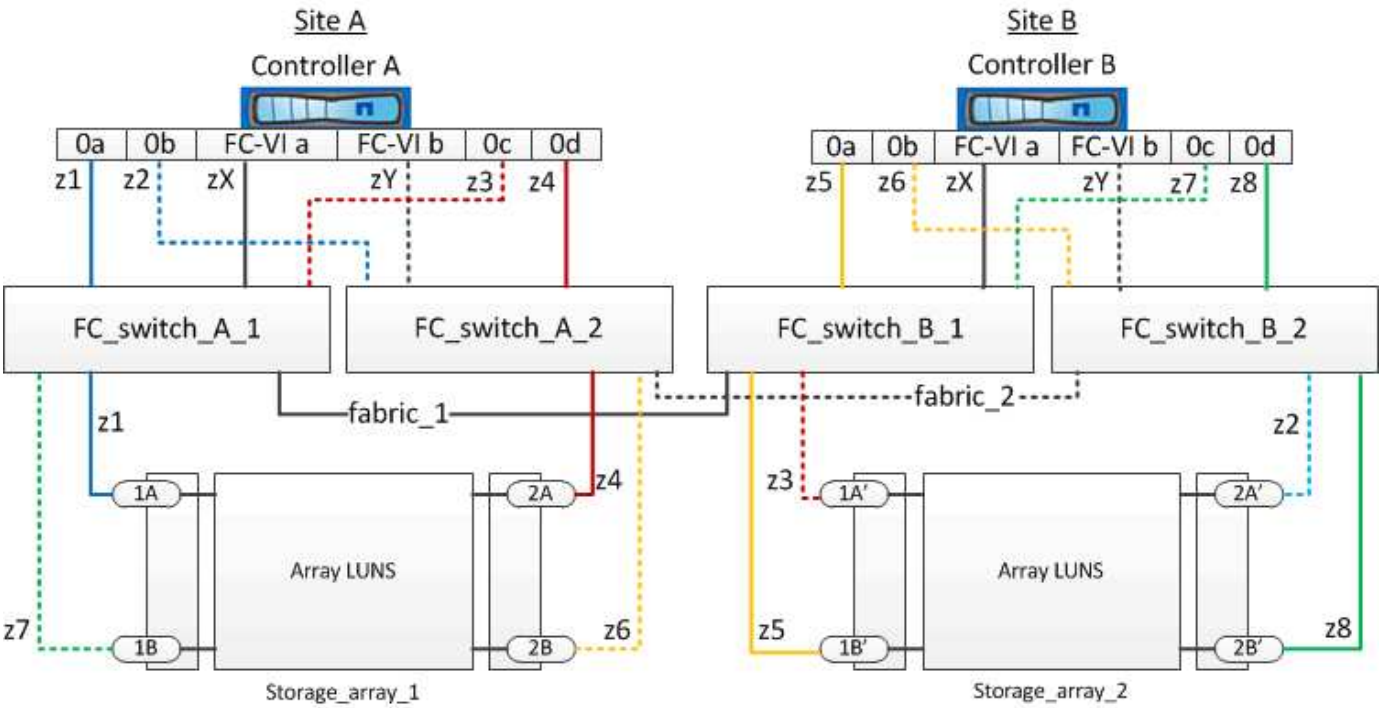

The example shows single-initiator to single-target zoning for the MetroCluster configurations. The lines in the example represent zones rather than connections; each line is labeled with its zone number.

In the example, array LUNs are allocated on each storage array. LUNs of equal size are provisioned on the storage arrays at both sites, which is a SyncMirror requirement. Each ONTAP system has two paths to array LUNs. The ports on the storage array are redundant.

The redundant array port pairs for both the sites are as follows:

- Storage array at Site A:
  - Ports 1A and 2A
  - Ports 1B and 2B
- Storage array at Site B:
  - Ports 1A' and 2A'
  - Ports 1B' and 2B'

The redundant port pairs on each storage array form alternate paths. Therefore, both the ports of the port pairs can access the LUNs on the respective storage arrays.

The following table shows the zones for the illustrations:

Zone	ONTAP controller and initiator port	Storage array port
FC_switch_A_1		
z1	Controller A: Port 0a	Port 1A
z3	Controller A: Port 0c	Port 1A'
FC_switch_A_2		
z2	Controller A: Port 0b	Port 2A'
z4	Controller A: Port 0d	Port 2A
FC_switch_B_1		
z5	Controller B: Port 0a	Port 1B'
z7	Controller B: Port 0c	Port 1B
FC_switch_B_2		
z6	Controller B: Port 0b	Port 2B
z8	Controller B: Port 0d	Port 2B'

The following table shows the zones for the FC-VI connections:

Zone	ONTAP controller and initiator port	Switch
Site A		
zX	Controller A: Port FC-VI a	FC_switch_A_1
zY	Controller A: Port FC-VI b	FC_switch_A_2
Site B		
zX	Controller B: Port FC-VI a	FC_switch_B_1
zY	Controller B: Port FC-VI b	FC_switch_B_2

Related information

- Switch zoning defines paths between connected nodes. Configuring the zoning enables you to define which array LUNs can be viewed by a specific ONTAP system.

  Requirements for switch zoning in a MetroCluster configuration with array LUNs

  Example of switch zoning in a four-node MetroCluster configuration with array LUNs

- When using switch zoning in a MetroCluster configuration with array LUNs, youmust ensure that certain basic requirements are followed.

  Example of switch zoning in an eight-node MetroCluster configuration with array LUNs

Example of switch zoning in a four-node MetroCluster configuration with array LUNs

Switch zoning defines paths between connected nodes. Configuring the zoning enables you to define which array LUNs can be viewed by a specific ONTAP systems.

You can use the following example as a reference when determining zoning for a four-node MetroCluster configuration with array LUNs. The example shows single-initiator to single-target zoning for a MetroCluster configuration. The lines in the following example represent zones rather than connections; each line is labeled with its zone number:

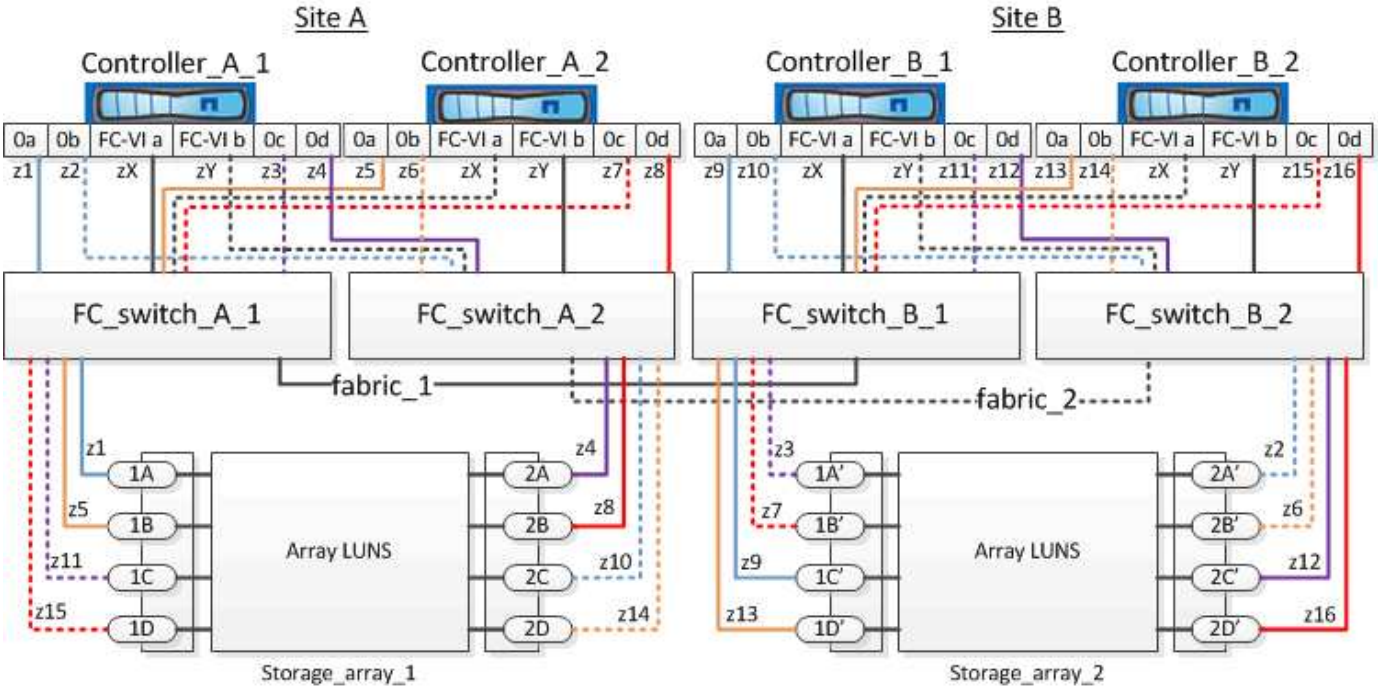

In the illustration, array LUNs are allocated on each storage array for the MetroCluster configuration. LUNs of equal size are provisioned on the storage arrays at both sites, which is a SyncMirror requirement. Each ONTAP system has two paths to array LUNs. The ports on the storage array are redundant.

In the illustration, the redundant array port pairs for both the sites are as follows:

- Storage array at Site A:
  - Ports 1A and 2A
  - Ports 1B and 2B
  - Ports 1C and 2C
  - Ports 1D and 2D
- Storage array at Site B:

- Ports 1A' and 2A'
- Ports 1B' and 2B'
- Ports 1C' and 2C'
- Ports 1D' and 2D'

The redundant port pairs on each storage array form alternate paths. Therefore, both the ports of the port pairs can access the LUNs on the respective storage arrays.

The following tables show the zones for this example:

Zones for FC_switch_A_1

Zone	ONTAP controller and initiator port	Storage array port
z1	Controller_A_1: Port 0a	Port 1A
z3	Controller_A_1: Port 0c	Port 1A'
z5	Controller_A_2: Port 0a	Port 1B
z7	Controller_A_2: Port 0c	Port 1B'

Zones for FC_switch_A_2

Zone	ONTAP controller and initiator port	Storage array port
z2	Controller_A_1: Port 0b	Port 2A'
z4	Controller_A_1: Port 0d	Port 2A
z6	Controller_A_2: Port 0b	Port 2B'
z8	Controller_A_2: Port 0d	Port 2B

Zones for FC_switch_B_1

Zone	ONTAP controller and initiator port	Storage array port
z9	Controller_B_1: Port 0a	Port 1C'
z11	Controller_B_1: Port 0c	Port 1C
z13	Controller_B_2: Port 0a	Port 1D'

z15	Controller_B_2: Port 0c	Port 1D

Zones for FC_switch_B_2

Zone	ONTAP controller and initiator port	Storage array port
z10	Controller_B_1: Port 0b	Port 2C
z12	Controller_B_1: Port 0d	Port 2C'
z14	Controller_B_2: Port 0b	Port 2D
z16	Controller_B_2: Port 0d	Port 2D'

Zones for the FC-VI connections at Site A

Zone	ONTAP controller and FC initiator port	Switch
zX	Controller_A_1: Port FC-VI a	FC_switch_A_1
zY	Controller_A_1: Port FC-VI b	FC_switch_A_2
zX	Controller_A_2: Port FC-VI a	FC_switch_A_1
zY	Controller_A_2: Port FC-VI b	FC_switch_A_2

Zones for the FC-VI connections at Site B

Zone	ONTAP controller and FC initiator port	Switch
zX	Controller_B_1: Port FC-VI a	FC_switch_B_1
zY	Controller_B_1: Port FC-VI b	FC_switch_B_2
zX	Controller_B_2: Port FC-VI a	FC_switch_B_1
zY	Controller_B_2: Port FC-VI b	FC_switch_B_2

Related information

- Switch zoning defines paths between connected nodes. Configuring the zoning enables you to define which array LUNs can be viewed by specific ONTAP systems.

  Example of switch zoning in a two-node MetroCluster configuration with array LUNs

Example of switch zoning in an eight-node MetroCluster configuration with array LUNs

- When using switch zoning in a MetroCluster configuration with array LUNs, you must ensure that certain basic requirements are followed.

  Requirements for switch zoning in a MetroCluster configuration with array LUNs

Example of switch zoning in an eight-node MetroCluster configuration with array LUNs

Switch zoning defines paths between connected nodes. Configuring the zoning enables you to define which array LUNs can be viewed by specific ONTAP systems.

An eight-node MetroCluster configuration consists of two four-node DR groups. The first DR group consists of the following nodes:

- controller_A_1
- controller_A_2
- controller_B_1
- controller_B_2

The second DR group consists of the following nodes:

- controller_A_3
- controller_A_4
- controller_B_3
- controller_B_4

To configure the switch zoning, you can use the zoning examples for a four-node MetroCluster configuration for the first DR group.

Example of switch zoning in a four-node MetroCluster configuration with array LUNs

To configure zoning for the second DR group, follow the same examples and requirements for the FC initiator ports and array LUNs belonging to the controllers in the second DR group.

Related information

- Switch zoning defines paths between connected nodes. Configuring the zoning enables you to define which array LUNs can be viewed by specific ONTAP systems.

  Example of switch zoning in a two-node MetroCluster configuration with array LUNs

  Example of switch zoning in a four-node MetroCluster configuration with array LUNs

- When using switch zoning in a MetroCluster configuration with array LUNs, you must ensure that certain basic requirements are followed.

  Requirements for switch zoning in a MetroCluster configuration with array LUNs

Copyright information

Copyright © 2024 NetApp, Inc. All Rights Reserved. Printed in the U.S. No part of this document covered by copyright may be reproduced in any form or by any means—graphic, electronic, or mechanical, including photocopying, recording, taping, or storage in an electronic retrieval system—without prior written permission of the copyright owner.

Software derived from copyrighted NetApp material is subject to the following license and disclaimer:

THIS SOFTWARE IS PROVIDED BY NETAPP “AS IS” AND WITHOUT ANY EXPRESS OR IMPLIED WARRANTIES, INCLUDING, BUT NOT LIMITED TO, THE IMPLIED WARRANTIES OF MERCHANTABILITY AND FITNESS FOR A PARTICULAR PURPOSE, WHICH ARE HEREBY DISCLAIMED. IN NO EVENT SHALL NETAPP BE LIABLE FOR ANY DIRECT, INDIRECT, INCIDENTAL, SPECIAL, EXEMPLARY, OR CONSEQUENTIAL DAMAGES (INCLUDING, BUT NOT LIMITED TO, PROCUREMENT OF SUBSTITUTE GOODS OR SERVICES; LOSS OF USE, DATA, OR PROFITS; OR BUSINESS INTERRUPTION) HOWEVER CAUSED AND ON ANY THEORY OF LIABILITY, WHETHER IN CONTRACT, STRICT LIABILITY, OR TORT (INCLUDING NEGLIGENCE OR OTHERWISE) ARISING IN ANY WAY OUT OF THE USE OF THIS SOFTWARE, EVEN IF ADVISED OF THE POSSIBILITY OF SUCH DAMAGE.

NetApp reserves the right to change any products described herein at any time, and without notice. NetApp assumes no responsibility or liability arising from the use of products described herein, except as expressly agreed to in writing by NetApp. The use or purchase of this product does not convey a license under any patent rights, trademark rights, or any other intellectual property rights of NetApp.

The product described in this manual may be protected by one or more U.S. patents, foreign patents, or pending applications.

LIMITED RIGHTS LEGEND: Use, duplication, or disclosure by the government is subject to restrictions as set forth in subparagraph (b)(3) of the Rights in Technical Data -Noncommercial Items at DFARS 252.227-7013 (FEB 2014) and FAR 52.227-19 (DEC 2007).

Data contained herein pertains to a commercial product and/or commercial service (as defined in FAR 2.101) and is proprietary to NetApp, Inc. All NetApp technical data and computer software provided under this Agreement is commercial in nature and developed solely at private expense. The U.S. Government has a non-exclusive, non-transferrable, nonsublicensable, worldwide, limited irrevocable license to use the Data only in connection with and in support of the U.S. Government contract under which the Data was delivered. Except as provided herein, the Data may not be used, disclosed, reproduced, modified, performed, or displayed without the prior written approval of NetApp, Inc. United States Government license rights for the Department of Defense are limited to those rights identified in DFARS clause 252.227-7015(b) (FEB 2014).

Trademark information

NETAPP, the NETAPP logo, and the marks listed at http://www.netapp.com/TM are trademarks of NetApp, Inc. Other company and product names may be trademarks of their respective owners.