Data and management traffic separation

ONTAP Select

Barb Einarsen
November 19, 2019

This PDF was generated from https://docs.netapp.com/us-en/ontap-select/concept_nw_data_mgmt_separation.html on June 29, 2021. Always check docs.netapp.com for the latest.

Table of Contents

Data and management traffic separation 1

Data and management traffic separation

Isolate data traffic and management traffic into separate layer-2 networks.

ONTAP Select external network traffic is defined as data (CIFS, NFS, and iSCSI), management, and replication (SnapMirror) traffic. Within an ONTAP cluster, each style of traffic uses a separate logical interface that must be hosted on a virtual network port. On the multinode configuration of ONTAP Select, these are designated as ports e0a and e0b/e0g. On the single node configuration, these are designated as e0a and e0b/e0c, while the remaining ports are reserved for internal cluster services.

NetApp recommends isolating data traffic and management traffic into separate layer-2 networks. In the ONTAP Select environment, this is done using VLAN tags. This can be achieved by assigning a VLAN-tagged port group to network adapter 1 (port e0a) for management traffic. Then you can assign a separate port group(s) to ports e0b and e0c (single-node clusters) and e0b and e0g (multinode clusters) for data traffic.

If the VST solution described earlier in this document is not sufficient, collocating both data and management LIFs on the same virtual port might be required. To do so, use a process known as VGT, in which VLAN tagging is performed by the VM.

> Data and management network separation through VGT is not available when using the ONTAP Deploy utility. This process must be performed after cluster setup is complete.

There is an additional caveat when using VGT and two-node clusters. In two-node cluster configurations, the node management IP address is used to establish connectivity to the mediator before ONTAP is fully available. Therefore, only EST and VST tagging is supported on the port group mapped to the node management LIF (port e0a). Furthermore, if both the management and the data traffic are using the same port group, only EST/VST are supported for the entire two-node cluster.

Both configuration options, VST and VGT, are supported. The following figure shows the first scenario, VST, in which traffic is tagged at the vSwitch layer through the assigned port group. In this configuration, cluster and node management LIFs are assigned to ONTAP port e0a and tagged with VLAN ID 10 through the assigned port group. Data LIFs are assigned to port e0b and either e0c or e0g and given VLAN ID 20 using a second port group. The cluster ports use a third port group and are on VLAN ID 30.

Data and management separation using VST

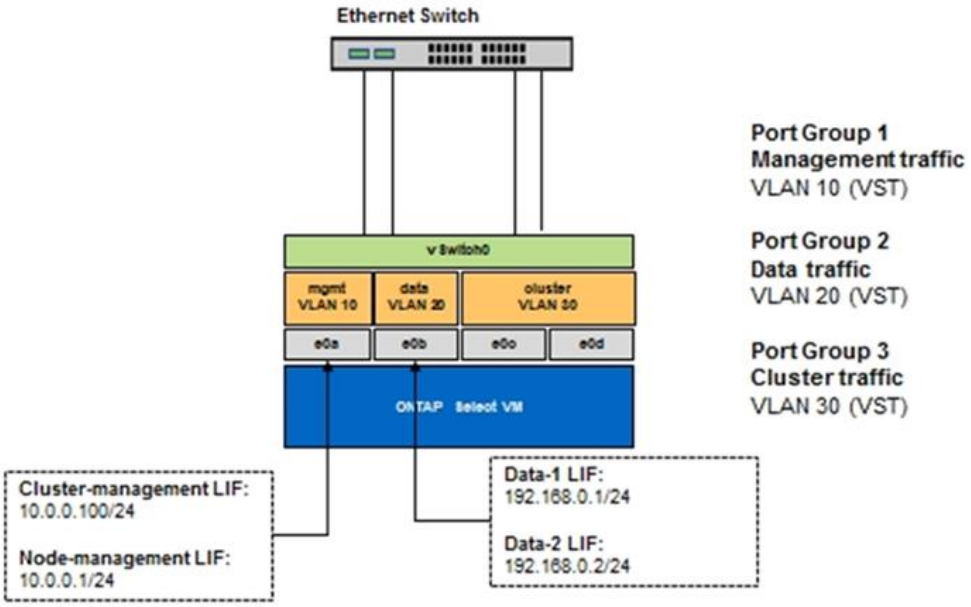

The following figure shows the second scenario, VGT, in which traffic is tagged by the ONTAP VM using VLAN ports that are placed into separate broadcast domains. In this example, virtual ports e0a-10/e0b-10/(e0c or e0g)-10 and e0a-20/e0b-20 are placed on top of VM ports e0a and e0b. This configuration allows network tagging to be performed directly within ONTAP, rather than at the vSwitch layer. Management and data LIFs are placed on these virtual ports, allowing further layer-2 subdivision within a single VM port. The cluster VLAN (VLAN ID 30) is still tagged at the port group.

Notes:

- This style of configuration is especially desirable when using multiple IPspaces. Group VLAN ports into separate custom IPspaces if further logical isolation and multitenancy are desired.
- To support VGT, the ESXi/ESX host network adapters must be connected to trunk ports on the physical switch. The port groups connected to the virtual switch must have their VLAN ID set to 4095 to enable trunking on the port group.

Data and management separation using VGT

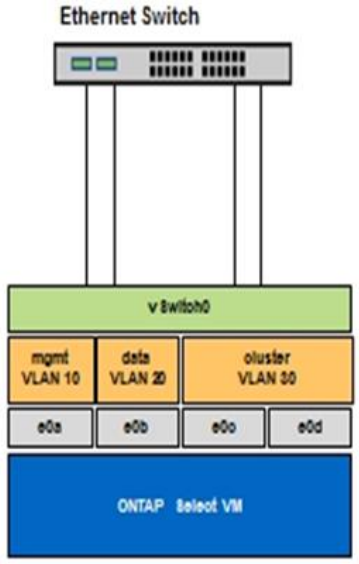

Port Group 1 – No tagging at Port Group Level
Management traffic
VLAN 10 (VGT)
Data traffic
VLAN 20 (VGT)

Port Group 2
Cluster traffic
VLAN 30 (VST)

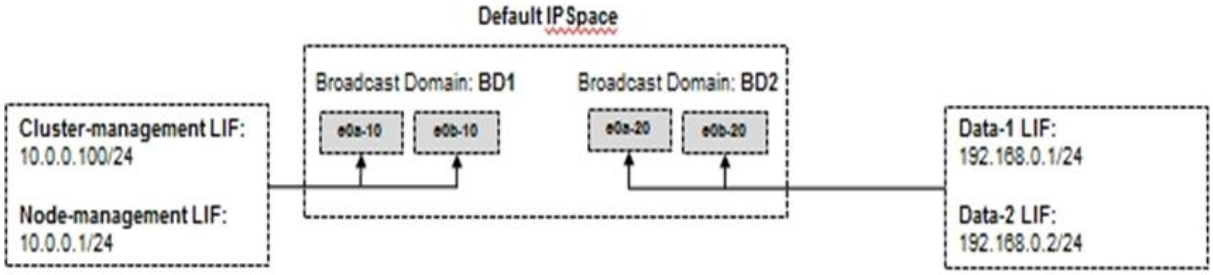

Copyright Information

Copyright © 2021 NetApp, Inc. All rights reserved. Printed in the U.S. No part of this document covered by copyright may be reproduced in any form or by any means-graphic, electronic, or mechanical, including photocopying, recording, taping, or storage in an electronic retrieval system-without prior written permission of the copyright owner.

Software derived from copyrighted NetApp material is subject to the following license and disclaimer:

THIS SOFTWARE IS PROVIDED BY NETAPP “AS IS” AND WITHOUT ANY EXPRESS OR IMPLIED WARRANTIES, INCLUDING, BUT NOT LIMITED TO, THE IMPLIED WARRANTIES OF MERCHANTABILITY AND FITNESS FOR A PARTICULAR PURPOSE, WHICH ARE HEREBY DISCLAIMED. IN NO EVENT SHALL NETAPP BE LIABLE FOR ANY DIRECT, INDIRECT, INCIDENTAL, SPECIAL, EXEMPLARY, OR CONSEQUENTIAL DAMAGES (INCLUDING, BUT NOT LIMITED TO, PROCUREMENT OF SUBSTITUTE GOODS OR SERVICES; LOSS OF USE, DATA, OR PROFITS; OR BUSINESS INTERRUPTION) HOWEVER CAUSED AND ON ANY THEORY OF LIABILITY, WHETHER IN CONTRACT, STRICT LIABILITY, OR TORT (INCLUDING NEGLIGENCE OR OTHERWISE) ARISING IN ANY WAY OUT OF THE USE OF THIS SOFTWARE, EVEN IF ADVISED OF THE POSSIBILITY OF SUCH DAMAGE.

NetApp reserves the right to change any products described herein at any time, and without notice. NetApp assumes no responsibility or liability arising from the use of products described herein, except as expressly agreed to in writing by NetApp. The use or purchase of this product does not convey a license under any patent rights, trademark rights, or any other intellectual property rights of NetApp.

The product described in this manual may be protected by one or more U.S. patents, foreign patents, or pending applications.

RESTRICTED RIGHTS LEGEND: Use, duplication, or disclosure by the government is subject to restrictions as set forth in subparagraph (c)(1)(ii) of the Rights in Technical Data and Computer Software clause at DFARS 252.277-7103 (October 1988) and FAR 52-227-19 (June 1987).

Trademark Information

NETAPP, the NETAPP logo, and the marks listed at http://www.netapp.com/TM are trademarks of NetApp, Inc. Other company and product names may be trademarks of their respective owners.