Physical switch configuration

ONTAP Select

Barb Einarsen
November 19, 2019

This PDF was generated from https://docs.netapp.com/us-en/ontap-select/concept_nw_physical_switch_config.html on June 29, 2021. Always check docs.netapp.com for the latest.

Table of Contents

Physical switch configuration 1
Shared physical switch 1
Multiple physical switches 2

Physical switch configuration

Upstream physical switch configuration details based on single-switch and multi-switch environments.

Careful consideration should be taken when making connectivity decisions from the virtual switch layer to physical switches. Separation of internal cluster traffic from external data services should extend to the upstream physical networking layer through isolation provided by layer-2 VLANs.

Physical switch ports should be configured as trunkports. ONTAP Select external traffic can be separated across multiple layer-2 networks in one of two ways. One method is by using ONTAP VLAN-tagged virtual ports with a single port group. The other method is by assigning separate port groups in VST mode to management port e0a. You must also assign data ports to e0b and e0c/e0g depending on the ONTAP Select release and the single-node or multinode configuration. If the external traffic is separated across multiple layer-2 networks, the uplink physical switch ports should have those VLANs in its allowed VLAN list.

ONTAP Select internal network traffic occurs using virtual interfaces defined with link local IP addresses. Because these IP addresses are nonroutable, internal traffic between cluster nodes must flow across a single layer-2 network. Route hops between ONTAP Select cluster nodes are unsupported. Best Practice

Shared physical switch

The following figure depicts a possible switch configuration used by one node in a multinode ONTAP Select cluster. In this example, the physical NICs used by the vSwitches hosting both the internal and external network port groups are cabled to the same upstream switch. Switch traffic is kept isolated using broadcast domains contained within separate VLANs.

For the ONTAP Select internal network, tagging is done at the port group level. While the following example uses VGT for the external network, both VGT and VST are supported on that port group.

Network configuration using shared physical switch

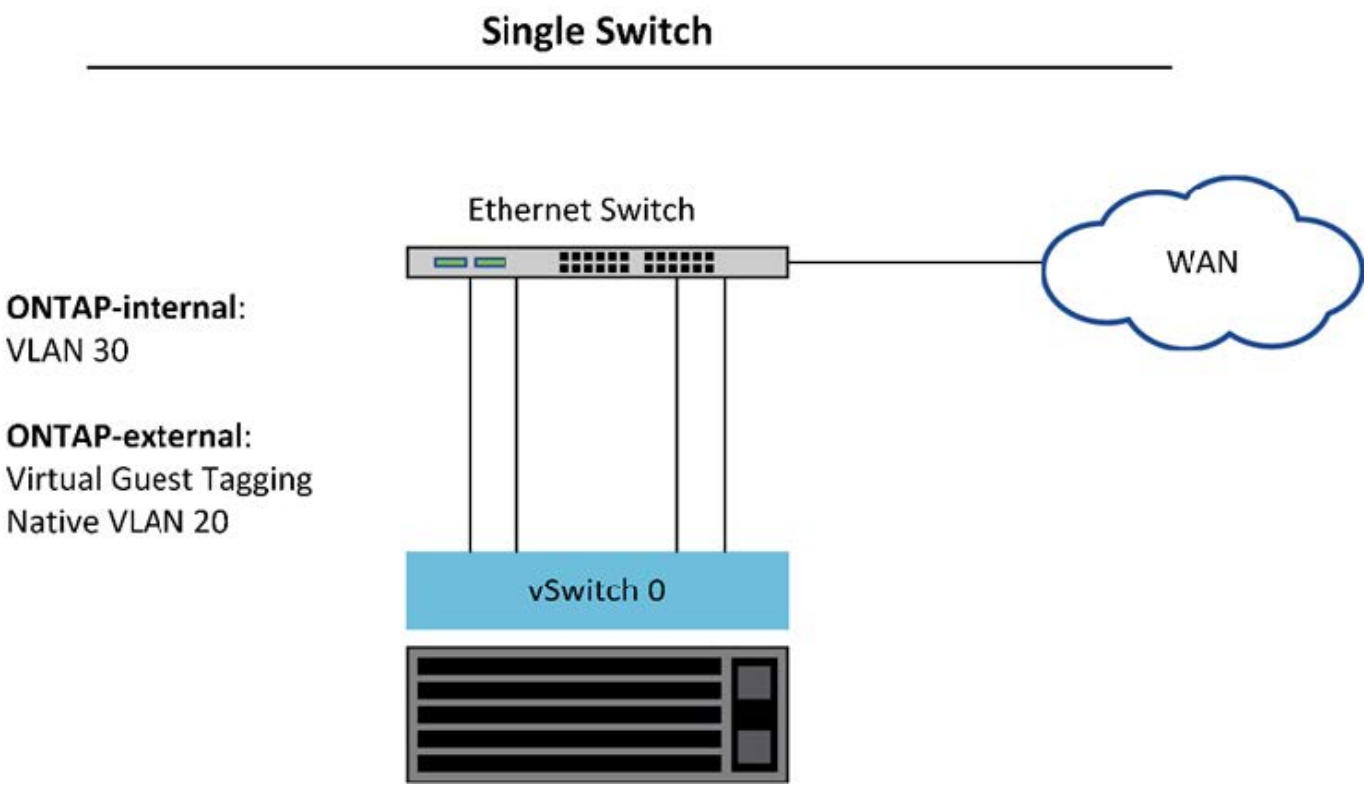

In this configuration, the shared switch becomes a single point of failure. If possible, multiple switches should be used to prevent a physical hardware failure from causing a cluster network outage.

Multiple physical switches

When redundancy is needed, multiple physical network switches should be used. The following figure shows a recommended configuration used by one node in a multinode ONTAP Select cluster. NICs from both the internal and external port groups are cabled into different physical switches, protecting the user from a single hardware-switch failure. A virtual port channel is configured between switches to prevent spanning tree issues.

Network configuration using multiple physical switches

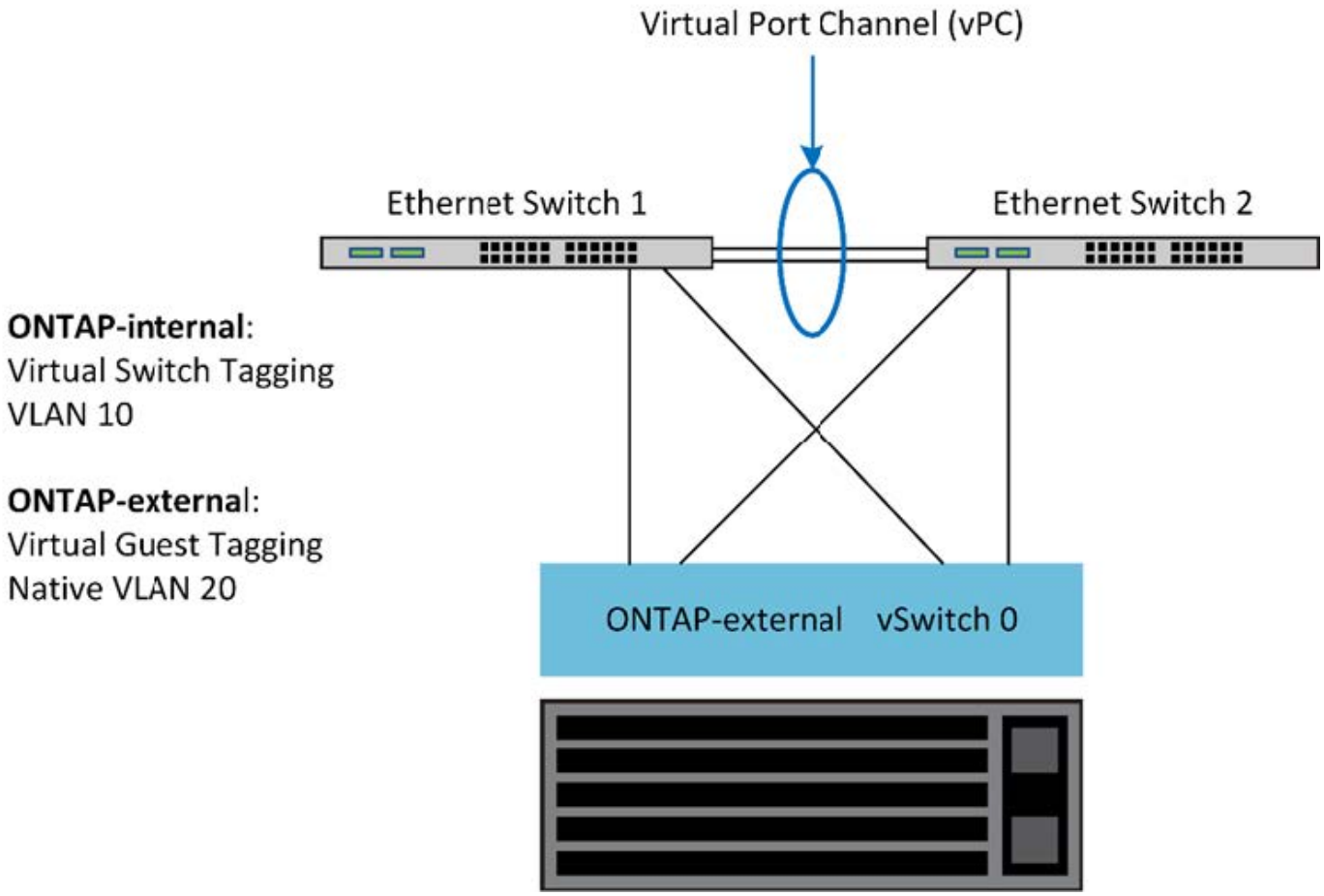
Virtual Port Channel (vPC)
Ethernet Switch 1
Ethernet Switch 2
ONTAP-internal:
Virtual Switch Tagging
VLAN 10
ONTAP-external:
Virtual Guest Tagging
Native VLAN 20
ONTAP-external vSwitch 0

Copyright Information

Copyright © 2021 NetApp, Inc. All rights reserved. Printed in the U.S. No part of this document covered by copyright may be reproduced in any form or by any means-graphic, electronic, or mechanical, including photocopying, recording, taping, or storage in an electronic retrieval system-without prior written permission of the copyright owner.

Software derived from copyrighted NetApp material is subject to the following license and disclaimer:

THIS SOFTWARE IS PROVIDED BY NETAPP “AS IS” AND WITHOUT ANY EXPRESS OR IMPLIED WARRANTIES, INCLUDING, BUT NOT LIMITED TO, THE IMPLIED WARRANTIES OF MERCHANTABILITY AND FITNESS FOR A PARTICULAR PURPOSE, WHICH ARE HEREBY DISCLAIMED. IN NO EVENT SHALL NETAPP BE LIABLE FOR ANY DIRECT, INDIRECT, INCIDENTAL, SPECIAL, EXEMPLARY, OR CONSEQUENTIAL DAMAGES (INCLUDING, BUT NOT LIMITED TO, PROCUREMENT OF SUBSTITUTE GOODS OR SERVICES; LOSS OF USE, DATA, OR PROFITS; OR BUSINESS INTERRUPTION) HOWEVER CAUSED AND ON ANY THEORY OF LIABILITY, WHETHER IN CONTRACT, STRICT LIABILITY, OR TORT (INCLUDING NEGLIGENCE OR OTHERWISE) ARISING IN ANY WAY OUT OF THE USE OF THIS SOFTWARE, EVEN IF ADVISED OF THE POSSIBILITY OF SUCH DAMAGE.

NetApp reserves the right to change any products described herein at any time, and without notice. NetApp assumes no responsibility or liability arising from the use of products described herein, except as expressly agreed to in writing by NetApp. The use or purchase of this product does not convey a license under any patent rights, trademark rights, or any other intellectual property rights of NetApp.

The product described in this manual may be protected by one or more U.S. patents, foreign patents, or pending applications.

RESTRICTED RIGHTS LEGEND: Use, duplication, or disclosure by the government is subject to restrictions as set forth in subparagraph (c)(1)(ii) of the Rights in Technical Data and Computer Software clause at DFARS 252.277-7103 (October 1988) and FAR 52-227-19 (June 1987).

Trademark Information

NETAPP, the NETAPP logo, and the marks listed at http://www.netapp.com/TM are trademarks of NetApp, Inc. Other company and product names may be trademarks of their respective owners.