Host configuration and preparation checklist

ONTAP Select

Barb Einarsen
November 19, 2019

This PDF was generated from https://docs.netapp.com/us-en/ontap-select/reference_chk_host_prep.html on June 29, 2021. Always check docs.netapp.com for the latest.

Table of Contents

Host configuration and preparation checklist . . . 1
General hypervisor preparation . . . 1
ONTAP Select cluster network preparation . . . 1

Host configuration and preparation checklist

Prepare each of the hypervisor hosts where an ONTAP Select node is deployed. As part of preparing the hosts, carefully assess the deployment environment to make sure that the hosts are properly configured and ready to support the deployment of an ONTAP Select cluster.

> The ONTAP Select Deploy administration utility does not perform the required network and storage configuration of the hypervisor hosts. You must manually prepare each host prior to deploying an ONTAP Select cluster.

General hypervisor preparation

You must prepare the hypervisor hosts.

Each host must be configured with the following:

- A pre-installed and supported hypervisor
- A VMware vSphere license

Also, the same vCenter server must be able to manage all the hosts where an ONTAP Select node is deployed within the cluster.

In addition, you should make sure that the firewall ports are configured to allow access to vSphere. These ports must be open to support serial port connectivity to the ONTAP Select virtual machines.

By default, VMware allows access on the following ports:

- Port 23 and ports 1024 – 65535 (inbound traffic)
- Ports 0 – 65535 (outbound traffic)

NetApp recommends that the following firewall ports are opened to allow access to vSphere:

- Ports 7200 – 7400 (both inbound and outbound traffic)

ONTAP Select cluster network preparation

You can deploy ONTAP Select as either a multi-node cluster or a single-node cluster. In many cases, a multi-node cluster is preferable because of the additional storage capacity and HA capability.

Illustration of the ONTAP Select networks and nodes

The figures below illustrate the networks used with a single-node cluster and four-node cluster.

Single-node cluster showing one network

The following figure illustrates a single-node cluster. The external network carries client, management, and cross-cluster replication traffic (SnapMirror/SnapVault).

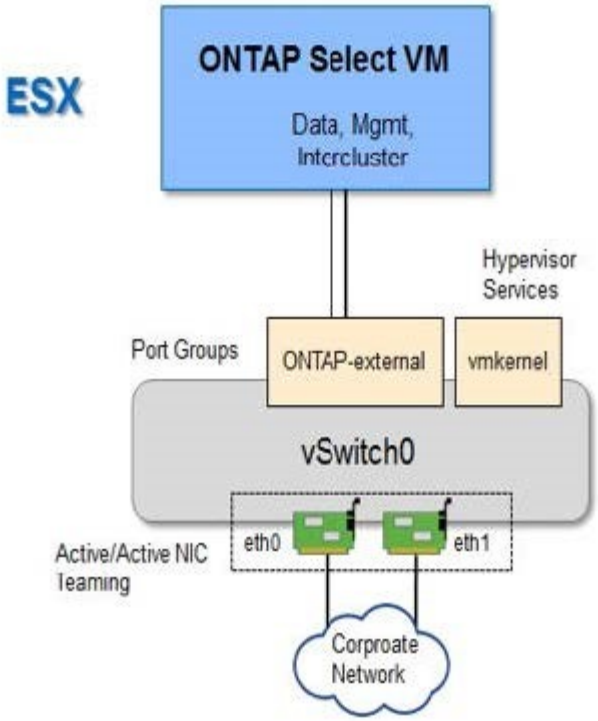

Four-node cluster showing two networks

The following figure illustrates a four-node cluster. The internal network enables communication among the nodes in support of the ONTAP cluster network services. The external network carries client, management, and cross-cluster replication traffic (SnapMirror/SnapVault).

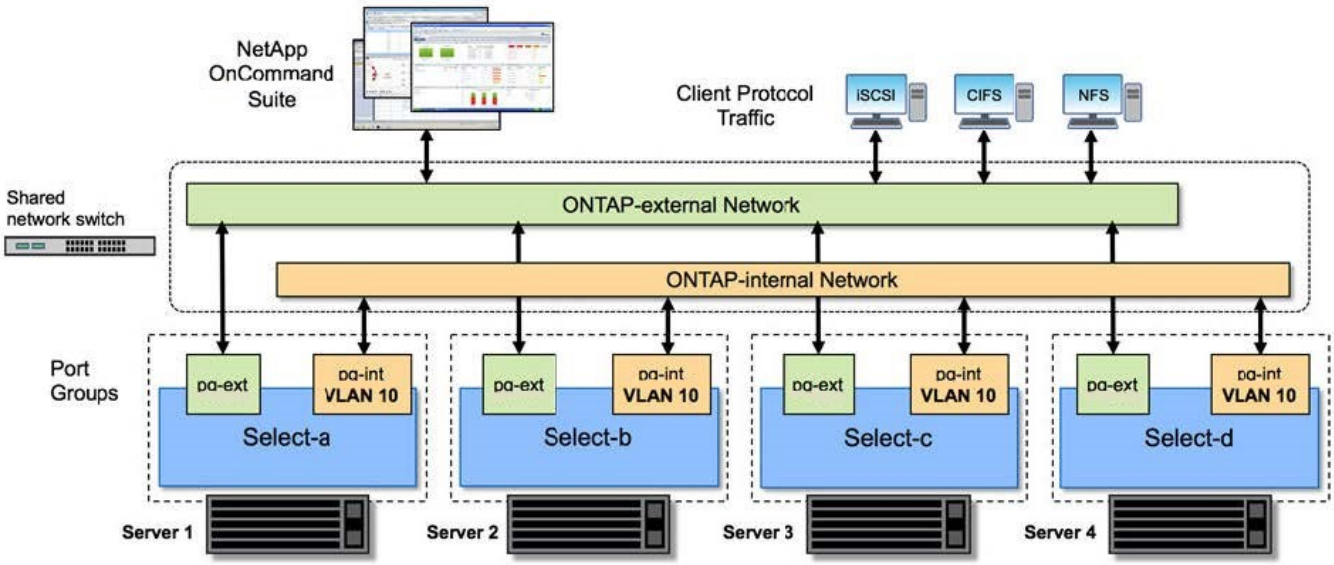

Single node within a four-node cluster

The following figure illustrates the typical network configuration for a single ONTAP Select virtual machine within a four-node cluster. There are two separate networks: ONTAP-internal and ONTAP-external.

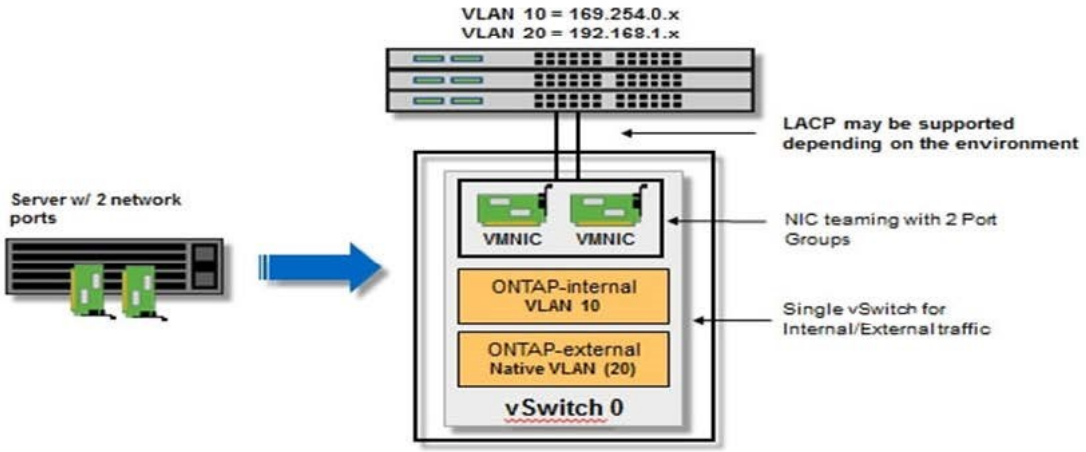

vSwitch configuration on a hypervisor host

The vSwitch is the core hypervisor component used to support the connectivity for the internal and external networks. There are several things you should consider as part of configuring each hypervisor vSwitch.

vSwitch configuration for a host with two physical ports (2x10Gb)

When each host includes two 10Gb ports, you should configure the vSwitch as follows:

- Configure a vSwitch and assign both the ports to the vSwitch. Create a NIC team using the two ports.
- Set the load balancing policy to “Route based on the originating virtual port ID”.
- Mark both adapters as “active”.
- Set the “Failback” setting to “Yes”.

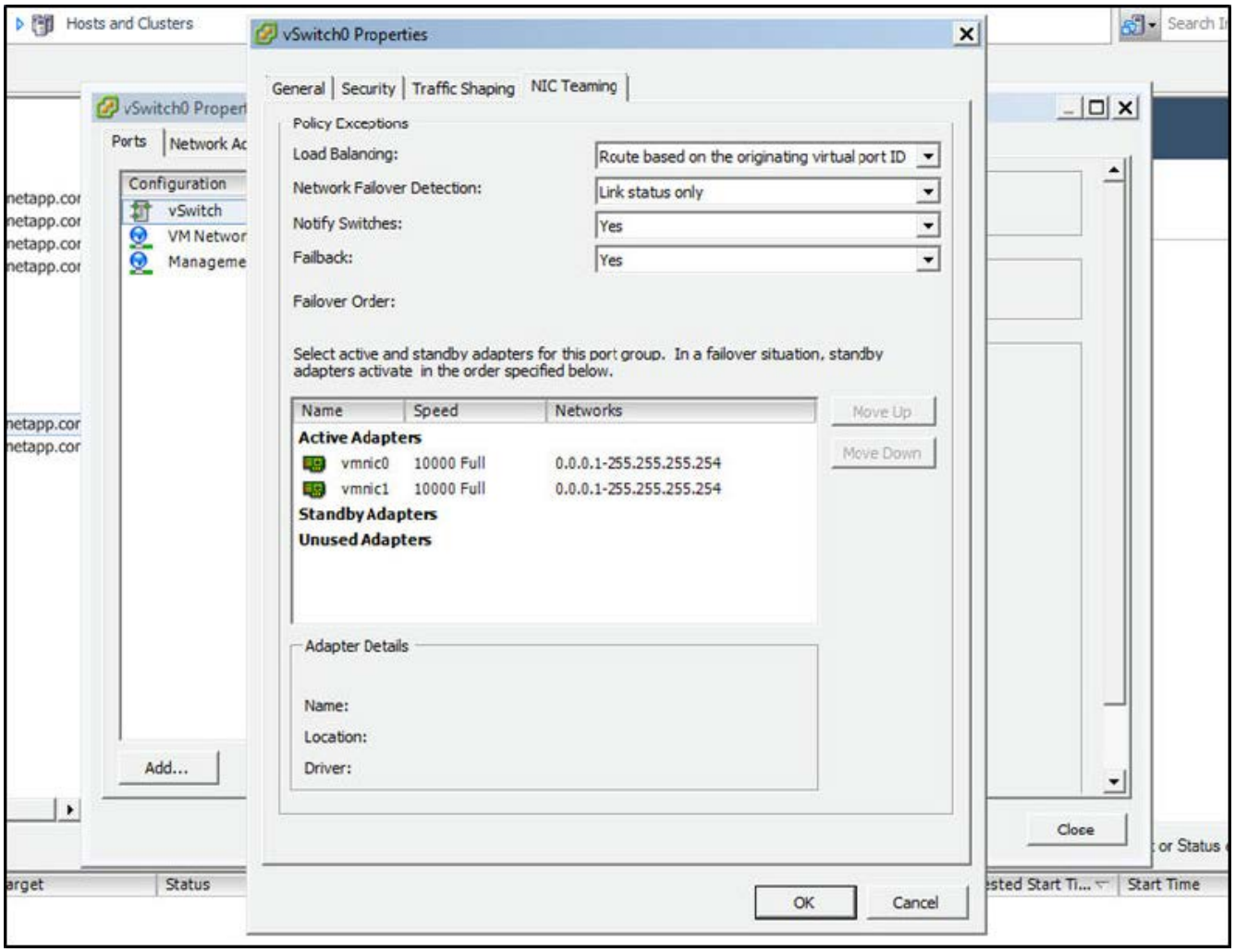

- Configure the vSwitch to use jumbo frames (9000 MTU).
- Configure a port group on the vSwitch for the internal traffic (ONTAP-internal):
  - The port group is assigned to ONTAP Select virtual network adapters e0c-e0g used for the cluster, HA interconnect, and mirroring traffic.
  - The port group should be on a non-routable VLAN because this network is expected to be private. You should add the appropriate VLAN tag to the port group to take this into account.
  - The load balancing, failback, and failover order settings of the port group should be the same as the vSwitch.
- Configure a port group on the vSwitch for the external traffic (ONTAP-external):
  - The port group is assigned to ONTAP Select virtual network adapters e0a-e0c used for data and management traffic.
  - The port group can be on a routable VLAN. Also, depending on the network environment, you should add an appropriate VLAN tag or configure the port group for VLAN trunking.
  - The load balancing, failback, and failover order settings of the port group should be same as vSwitch.

The above vSwitch configuration is for a host with 2x10Gb ports in a typical network environment.

Copyright Information

Copyright © 2021 NetApp, Inc. All rights reserved. Printed in the U.S. No part of this document covered by copyright may be reproduced in any form or by any means-graphic, electronic, or mechanical, including photocopying, recording, taping, or storage in an electronic retrieval system-without prior written permission of the copyright owner.

Software derived from copyrighted NetApp material is subject to the following license and disclaimer:

THIS SOFTWARE IS PROVIDED BY NETAPP “AS IS” AND WITHOUT ANY EXPRESS OR IMPLIED WARRANTIES, INCLUDING, BUT NOT LIMITED TO, THE IMPLIED WARRANTIES OF MERCHANTABILITY AND FITNESS FOR A PARTICULAR PURPOSE, WHICH ARE HEREBY DISCLAIMED. IN NO EVENT SHALL NETAPP BE LIABLE FOR ANY DIRECT, INDIRECT, INCIDENTAL, SPECIAL, EXEMPLARY, OR CONSEQUENTIAL DAMAGES (INCLUDING, BUT NOT LIMITED TO, PROCUREMENT OF SUBSTITUTE GOODS OR SERVICES; LOSS OF USE, DATA, OR PROFITS; OR BUSINESS INTERRUPTION) HOWEVER CAUSED AND ON ANY THEORY OF LIABILITY, WHETHER IN CONTRACT, STRICT LIABILITY, OR TORT (INCLUDING NEGLIGENCE OR OTHERWISE) ARISING IN ANY WAY OUT OF THE USE OF THIS SOFTWARE, EVEN IF ADVISED OF THE POSSIBILITY OF SUCH DAMAGE.

NetApp reserves the right to change any products described herein at any time, and without notice. NetApp assumes no responsibility or liability arising from the use of products described herein, except as expressly agreed to in writing by NetApp. The use or purchase of this product does not convey a license under any patent rights, trademark rights, or any other intellectual property rights of NetApp.

The product described in this manual may be protected by one or more U.S. patents, foreign patents, or pending applications.

RESTRICTED RIGHTS LEGEND: Use, duplication, or disclosure by the government is subject to restrictions as set forth in subparagraph (c)(1)(ii) of the Rights in Technical Data and Computer Software clause at DFARS 252.277-7103 (October 1988) and FAR 52-227-19 (June 1987).

Trademark Information

NETAPP, the NETAPP logo, and the marks listed at http://www.netapp.com/TM are trademarks of NetApp, Inc. Other company and product names may be trademarks of their respective owners.