Install hardware

Cluster and storage switches

NetApp
March 22, 2024

This PDF was generated from https://docs.netapp.com/us-en/ontap-systems-switches/switch-cisco-9336c-fx2/setup-worksheet-9336c-cluster.html on March 22, 2024. Always check docs.netapp.com for the latest.

Table of Contents

Install hardware . . . 1
Complete the Cisco Nexus 9336C-FX2 cabling worksheet . . . 1
Install the 9336C-FX2 cluster switch . . . 4
Configure the 9336C-FX2 cluster switch . . . 5
Install a Cisco Nexus 9336C-FX2 switch in a NetApp cabinet . . . 7

Install hardware

Complete the Cisco Nexus 9336C-FX2 cabling worksheet

If you want to document the supported platforms, download a PDF of this page and complete the cabling worksheet.

The sample cabling worksheet provides examples of recommended port assignments from the switches to the controllers. The blank worksheet provides a template that you can use in setting up your cluster.

Sample cabling worksheet

The sample port definition on each pair of switches is as follows:

Cluster switch A		**Cluster switch B**	
Switch port	Node and port usage	Switch port	Node and port usage
1	4x10GbE node 1	1	4x10GbE node 1
2	4x10GbE node 2	2	4x10GbE node 2
3	4x10GbE node 3	3	4x10GbE node 3
4	4x25GbE node 4	4	4x25GbE node 4
5	4x25GbE node 5	5	4x25GbE node 5
6	4x25GbE node 6	6	4x25GbE node 6
7	40/100GbE node 7	7	40/100GbE node 7
8	40/100GbE node 8	8	40/100GbE node 8
9	40/100GbE node 9	9	40/100GbE node 9
10	40/100GbE node 10	10	40/100GbE node 10
11	40/100GbE node 11	11	40/100GbE node 11
12	40/100GbE node 12	12	40/100GbE node 12
13	40/100GbE node 13	13	40/100GbE node 13
14	40/100GbE node 14	14	40/100GbE node 14

Cluster switch A		Cluster switch B	
15	40/100GbE node 15	15	40/100GbE node 15
16	40/100GbE node 16	16	40/100GbE node 16
17	40/100GbE node 17	17	40/100GbE node 17
18	40/100GbE node 18	18	40/100GbE node 18
19	40/100GbE node 19	19	40/100GbE node 19
20	40/100GbE node 20	20	40/100GbE node 20
21	40/100GbE node 21	21	40/100GbE node 21
22	40/100GbE node 22	22	40/100GbE node 22
23	40/100GbE node 23	23	40/100GbE node 23
24	40/100GbE node 24	24	40/100GbE node 24
25 through 34	Reserved	25 through 34	Reserved
35	100GbE ISL to switch B port 35	35	100GbE ISL to switch A port 35
36	100GbE ISL to switch B port 36	36	100GbE ISL to switch A port 36

Blank cabling worksheet

You can use the blank cabling worksheet to document the platforms that are supported as nodes in a cluster. The *Supported Cluster Connections* section of the Hardware Universe defines the cluster ports used by the platform.

Cluster switch A		Cluster switch B	
1		1	
2		2	
3		3	
4		4	

Cluster switch A		Cluster switch B	
5		5	
6		6	
7		7	
8		8	
9		9	
10		10	
11		11	
12		12	
13		13	
14		14	
15		15	
16		16	
17		17	
18		18	
19		19	
20		20	
21		21	
22		22	
23		23	
24		24	
25 through 34	Reserved	25 through 34	Reserved

Cluster switch A		Cluster switch B	
35	100GbE ISL to switch B port 35	35	100GbE ISL to switch A port 35
36	100GbE ISL to switch B port 36	36	100GbE ISL to switch A port 36

See the Hardware Universe for more information on switch ports.

Install the 9336C-FX2 cluster switch

Follow this procedure to set up and configure the Cisco Nexus 9336C-FX2 switch.

What you'll need

- Access to an HTTP, FTP, or TFTP server at the installation site to download the applicable NX-OS and Reference Configuration File (RCF) releases.
- Applicable NX-OS version, downloaded from the Cisco Software Download page.
- Applicable licenses, network and configuration information, and cables.
- Completed cabling worksheets.
- Applicable NetApp cluster network and management network RCFs downloaded from the NetApp Support Site at mysupport.netapp.com. All Cisco cluster network and management network switches arrive with the standard Cisco factory-default configuration. These switches also have the current version of the NX-OS software but do not have the RCFs loaded.
- Required switch and ONTAP documentation.

Steps

1. Rack the cluster network and management network switches and controllers.

If you are installing the…	Then…
Cisco Nexus 9336C-FX2 in a NetApp system cabinet	See the *Installing a Cisco Nexus 9336C-FX2 cluster switch and pass-through panel in a NetApp cabinet* guide for instructions to install the switch in a NetApp cabinet.
Equipment in a Telco rack	See the procedures provided in the switch hardware installation guides and the NetApp installation and setup instructions.

2. Cable the cluster network and management network switches to the controllers using the completed cabling worksheets.
3. Power on the cluster network and management network switches and controllers.

What's next?

Go to Configure the Cisco Nexus 9336C-FX2 switch.

Configure the 9336C-FX2 cluster switch

Follow this procedure to configure the Cisco Nexus 9336C-FX2 switch.

What you'll need

- Access to an HTTP, FTP, or TFTP server at the installation site to download the applicable NX-OS and Reference Configuration File (RCF) releases.
- Applicable NX-OS version, downloaded from the Cisco software download page.
- Applicable licenses, network and configuration information, and cables.
- Completed cabling worksheets.
- Applicable NetApp cluster network and management network RCFs downloaded from the NetApp Support Site at mysupport.netapp.com. All Cisco cluster network and management network switches arrive with the standard Cisco factory-default configuration. These switches also have the current version of the NX-OS software but do not have the RCFs loaded.
- Required switch and ONTAP documentation.

Steps

1. Perform an initial configuration of the cluster network switches.

   Provide applicable responses to the following initial setup questions when you first boot the switch. Your site's security policy defines the responses and services to enable.

Prompt	Response
Abort Auto Provisioning and continue with normal setup? (yes/no)	Respond with **yes**. The default is no.
Do you want to enforce secure password standard? (yes/no)	Respond with **yes**. The default is yes.
Enter the password for admin.	The default password is "admin"; you must create a new, strong password. A weak password can be rejected.
Would you like to enter the basic configuration dialog? (yes/no)	Respond with **yes** at the initial configuration of the switch.
Create another login account? (yes/no)	Your answer depends on your site's policies on alternate administrators. The default is **no**.
Configure read-only SNMP community string? (yes/no)	Respond with **no**. The default is no.
Configure read-write SNMP community string? (yes/no)	Respond with **no**. The default is no.

Prompt	Response
Enter the switch name.	Enter the switch name, which is limited to 63 alphanumeric characters.
Continue with Out-of-band (mgmt0) management configuration? (yes/no)	Respond with **yes** (the default) at that prompt. At the mgmt0 IPv4 address: prompt, enter your IP address: ip_address.
Configure the default-gateway? (yes/no)	Respond with **yes**. At the IPv4 address of the default-gateway: prompt, enter your default_gateway.
Configure advanced IP options? (yes/no)	Respond with **no**. The default is no.
Enable the telnet service? (yes/no)	Respond with **no**. The default is no.
Enabled SSH service? (yes/no)	Respond with **yes**. The default is yes. SSH is recommended when using Cluster Switch Health Monitor (CSHM) for its log collection features. SSHv2 is also recommended for enhanced security.
Enter the type of SSH key you want to generate (dsa/rsa/rsa1).	The default is **rsa**.
Enter the number of key bits (1024-2048).	Enter the number of key bits from 1024 to 2048.
Configure the NTP server? (yes/no)	Respond with **no**. The default is no.
Configure default interface layer (L3/L2)	Respond with **L2**. The default is L2.
Configure default switch port interface state (shut/noshut)	Respond with **noshut**. The default is noshut.
Configure CoPP system profile (strict/moderate/lenient/dense)	Respond with **strict**. The default is strict.
Would you like to edit the configuration? (yes/no)	You should see the new configuration at this point. Review and make any necessary changes to the configuration you just entered. Respond with **no** at the prompt if you are satisfied with the configuration. Respond with **yes** if you want to edit your configuration settings.

Prompt	Response
Use this configuration and save it? (yes/no)	Respond with **yes** to save the configuration. This automatically updates the kickstart and system images. If you do not save the configuration at this stage, none of the changes will be in effect the next time you reboot the switch.

2. Verify the configuration choices you made in the display that appears at the end of the setup, and make sure that you save the configuration.
3. Check the version on the cluster network switches, and if necessary, download the NetApp-supported version of the software to the switches from the Cisco software download page.

What's next?

Optionally, you can install a Cisco Nexus 9336C-FX2 switch in a NetApp cabinet. Otherwise, go to Prepare to install NX-OS and RCF.

Install a Cisco Nexus 9336C-FX2 switch in a NetApp cabinet

Depending on your configuration, you might need to install the Cisco Nexus 9336C-FX2 switch and pass-through panel in a NetApp cabinet. Standard brackets are included with the switch.

What you'll need

- The pass-through panel kit, which is available from NetApp (part number X8784-R6).

  The NetApp pass-through panel kit contains the following hardware:

  - One pass-through blanking panel
  - Four 10-32 x .75 screws
  - Four 10-32 clip nuts
- For each switch, eight 10-32 or 12-24 screws and clip nuts to mount the brackets and slider rails to the front and rear cabinet posts.
- The Cisco standard rail kit to install the switch in a NetApp cabinet.

> The jumper cords are not included with the pass-through kit and should be included with your switches. If they were not shipped with the switches, you can order them from NetApp (part number X1558A-R6).

- For initial preparation requirements, kit contents, and safety precautions, see Cisco Nexus 9000 Series Hardware Installation Guide.

Steps

1. Install the pass-through blanking panel in the NetApp cabinet.
   a. Determine the vertical location of the switches and blanking panel in the cabinet.

      In this procedure, the blanking panel is installed in U40.

b. Install two clip nuts on each side in the appropriate square holes for front cabinet rails.

c. Center the panel vertically to prevent intrusion into adjacent rack space, and then tighten the screws.

d. Insert the female connectors of both 48-inch jumper cords from the rear of the panel and through the brush assembly.

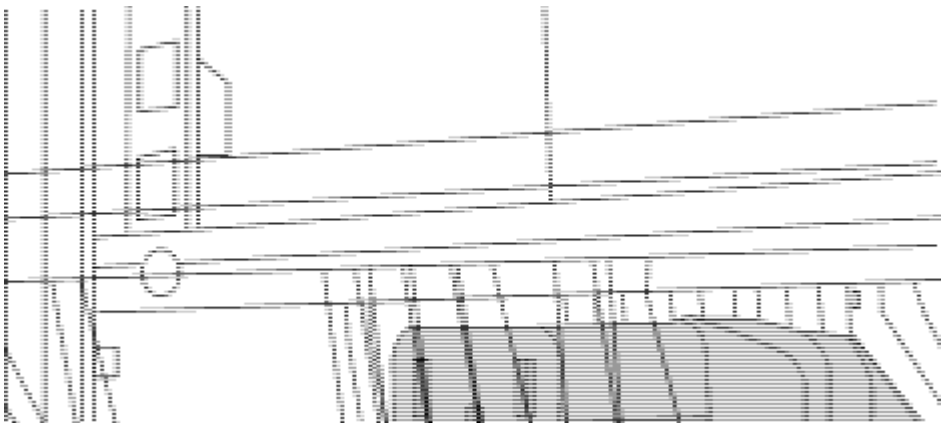

(1) Female connector of the jumper cord.

2. Install the rack-mount brackets on the Nexus 9336C-FX2 switch chassis.

   a. Position a front rack-mount bracket on one side of the switch chassis so that the mounting ear is aligned with the chassis faceplate (on the PSU or fan side), and then use four M4 screws to attach the bracket to the chassis.

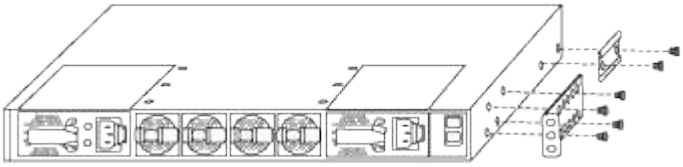

   b. Repeat step 2a with the other front rack-mount bracket on the other side of the switch.

   c. Install the rear rack-mount bracket on the switch chassis.

   d. Repeat step 2c with the other rear rack-mount bracket on the other side of the switch.

3. Install the clip nuts in the square hole locations for all four IEA posts.

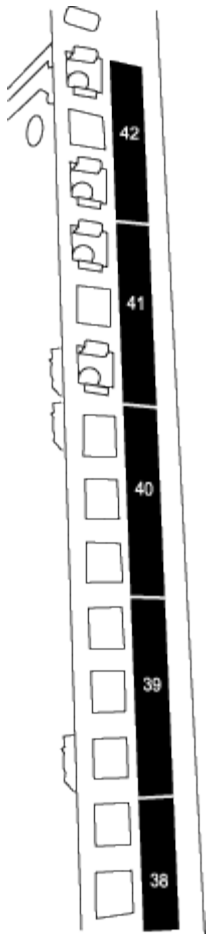

The two 9336C-FX2 switches are always mounted in the top 2U of the cabinet RU41 and 42.

4. Install the slider rails in the cabinet.
   a. Position the first slider rail at the RU42 mark on the back side of the rear left post, insert screws with the matching thread type, and then tighten the screws with your fingers.

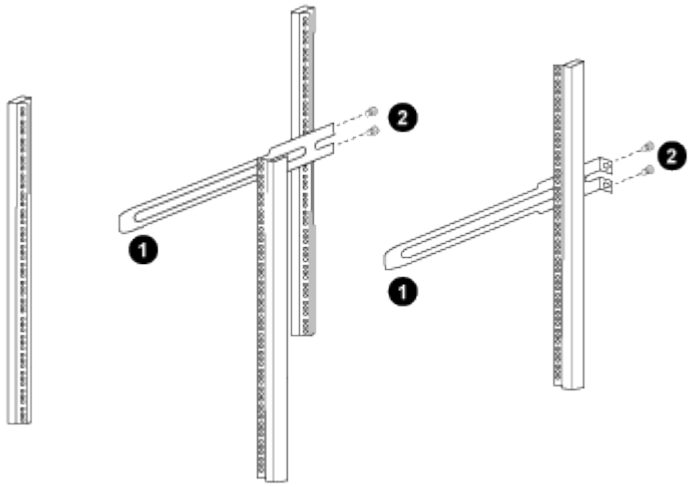

   (1) As you gently slide the slider rail, align it to the screw holes in the rack.

   (2) Tighten the screws of the slider rails to the cabinet posts.

   b. Repeat step 4a for the right-side rear post.

c. Repeat steps 4a and 4b at the RU41 locations on the cabinet.

5. Install the switch in the cabinet.

> This step requires two people: one person to support the switch from the front and another to guide the switch into the rear slider rails.

a. Position the back of the switch at RU41.

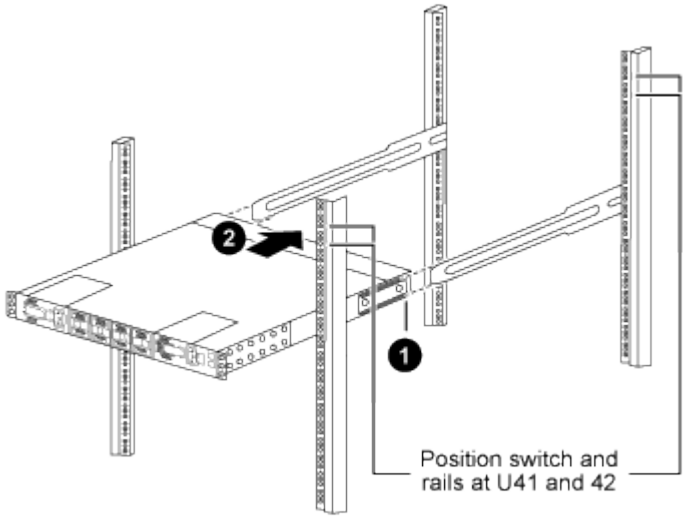

(1) As the chassis is pushed toward the rear posts, align the two rear rack-mount guides with the slider rails.

(2) Gently slide the switch until the front rack-mount brackets are flush with the front posts.

b. Attach the switch to the cabinet.

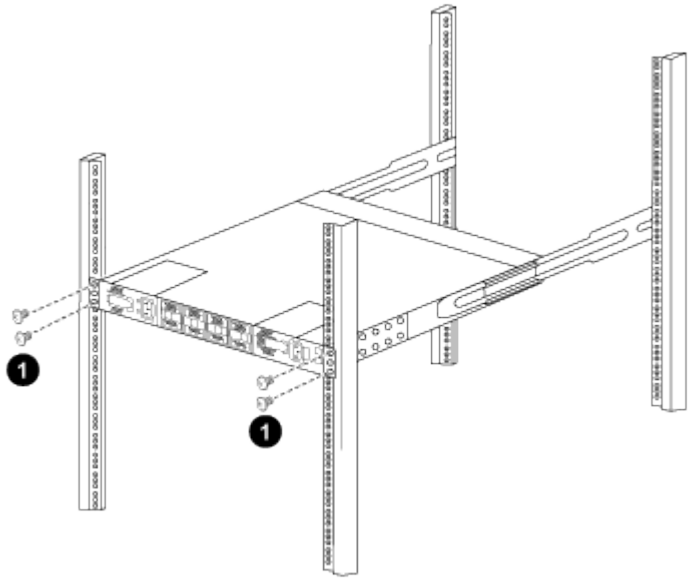

(1) With one person holding the front of the chassis level, the other person should fully tighten the four rear screws to the cabinet posts.

c. With the chassis now supported without assistance, fully tighten the front screws to the posts.

d. Repeat steps 5a through 5c for the second switch at the RU42 location.

> By using the fully installed switch as a support, it is not necessary to hold the front of the second switch during the installation process.

6. When the switches are installed, connect the jumper cords to the switch power inlets.
7. Connect the male plugs of both jumper cords to the closest available PDU outlets.

> To maintain redundancy, the two cords must be connected to different PDUs.

8. Connect the management port on each 9336C-FX2 switch to either of the management switches (if ordered) or connect them directly to your management network.

   The management port is the upper-right port located on the PSU side of the switch. The CAT6 cable for each switch needs to be routed through the pass-through panel after the switches are installed to connect to the management switches or management network.

What's next?

Configure the Cisco Nexus 9336C-FX2 switch.

Copyright information

Copyright © 2024 NetApp, Inc. All Rights Reserved. Printed in the U.S. No part of this document covered by copyright may be reproduced in any form or by any means—graphic, electronic, or mechanical, including photocopying, recording, taping, or storage in an electronic retrieval system—without prior written permission of the copyright owner.

Software derived from copyrighted NetApp material is subject to the following license and disclaimer:

THIS SOFTWARE IS PROVIDED BY NETAPP “AS IS” AND WITHOUT ANY EXPRESS OR IMPLIED WARRANTIES, INCLUDING, BUT NOT LIMITED TO, THE IMPLIED WARRANTIES OF MERCHANTABILITY AND FITNESS FOR A PARTICULAR PURPOSE, WHICH ARE HEREBY DISCLAIMED. IN NO EVENT SHALL NETAPP BE LIABLE FOR ANY DIRECT, INDIRECT, INCIDENTAL, SPECIAL, EXEMPLARY, OR CONSEQUENTIAL DAMAGES (INCLUDING, BUT NOT LIMITED TO, PROCUREMENT OF SUBSTITUTE GOODS OR SERVICES; LOSS OF USE, DATA, OR PROFITS; OR BUSINESS INTERRUPTION) HOWEVER CAUSED AND ON ANY THEORY OF LIABILITY, WHETHER IN CONTRACT, STRICT LIABILITY, OR TORT (INCLUDING NEGLIGENCE OR OTHERWISE) ARISING IN ANY WAY OUT OF THE USE OF THIS SOFTWARE, EVEN IF ADVISED OF THE POSSIBILITY OF SUCH DAMAGE.

NetApp reserves the right to change any products described herein at any time, and without notice. NetApp assumes no responsibility or liability arising from the use of products described herein, except as expressly agreed to in writing by NetApp. The use or purchase of this product does not convey a license under any patent rights, trademark rights, or any other intellectual property rights of NetApp.

The product described in this manual may be protected by one or more U.S. patents, foreign patents, or pending applications.

LIMITED RIGHTS LEGEND: Use, duplication, or disclosure by the government is subject to restrictions as set forth in subparagraph (b)(3) of the Rights in Technical Data -Noncommercial Items at DFARS 252.227-7013 (FEB 2014) and FAR 52.227-19 (DEC 2007).

Data contained herein pertains to a commercial product and/or commercial service (as defined in FAR 2.101) and is proprietary to NetApp, Inc. All NetApp technical data and computer software provided under this Agreement is commercial in nature and developed solely at private expense. The U.S. Government has a non-exclusive, non-transferrable, nonsublicensable, worldwide, limited irrevocable license to use the Data only in connection with and in support of the U.S. Government contract under which the Data was delivered. Except as provided herein, the Data may not be used, disclosed, reproduced, modified, performed, or displayed without the prior written approval of NetApp, Inc. United States Government license rights for the Department of Defense are limited to those rights identified in DFARS clause 252.227-7015(b) (FEB 2014).

Trademark information

NETAPP, the NETAPP logo, and the marks listed at http://www.netapp.com/TM are trademarks of NetApp, Inc. Other company and product names may be trademarks of their respective owners.