Install hardware

Cluster and storage switches

NetApp
March 22, 2024

This PDF was generated from https://docs.netapp.com/us-en/ontap-systems-switches/switch-cisco-9336c-fx2-shared/cable-9336c-shared.html on March 22, 2024. Always check docs.netapp.com for the latest.

Table of Contents

Install hardware 1
Complete the Cisco Nexus 9336C-FX2 cabling worksheet 1
Install Cisco Nexus 9336C-FX2 shared switches 4
Configure Cisco Nexus 9336C-FX2 shared switches 5
Install a Cisco Nexus 9336C-FX2 switch in a NetApp cabinet 7

Install hardware

Complete the Cisco Nexus 9336C-FX2 cabling worksheet

Use the following cabling images to complete the cabling between the controllers and the switches.

Cable NS224 storage as switch-attached

If you want to cable NS224 storage as switch-attached, follow the switch-attached diagram:

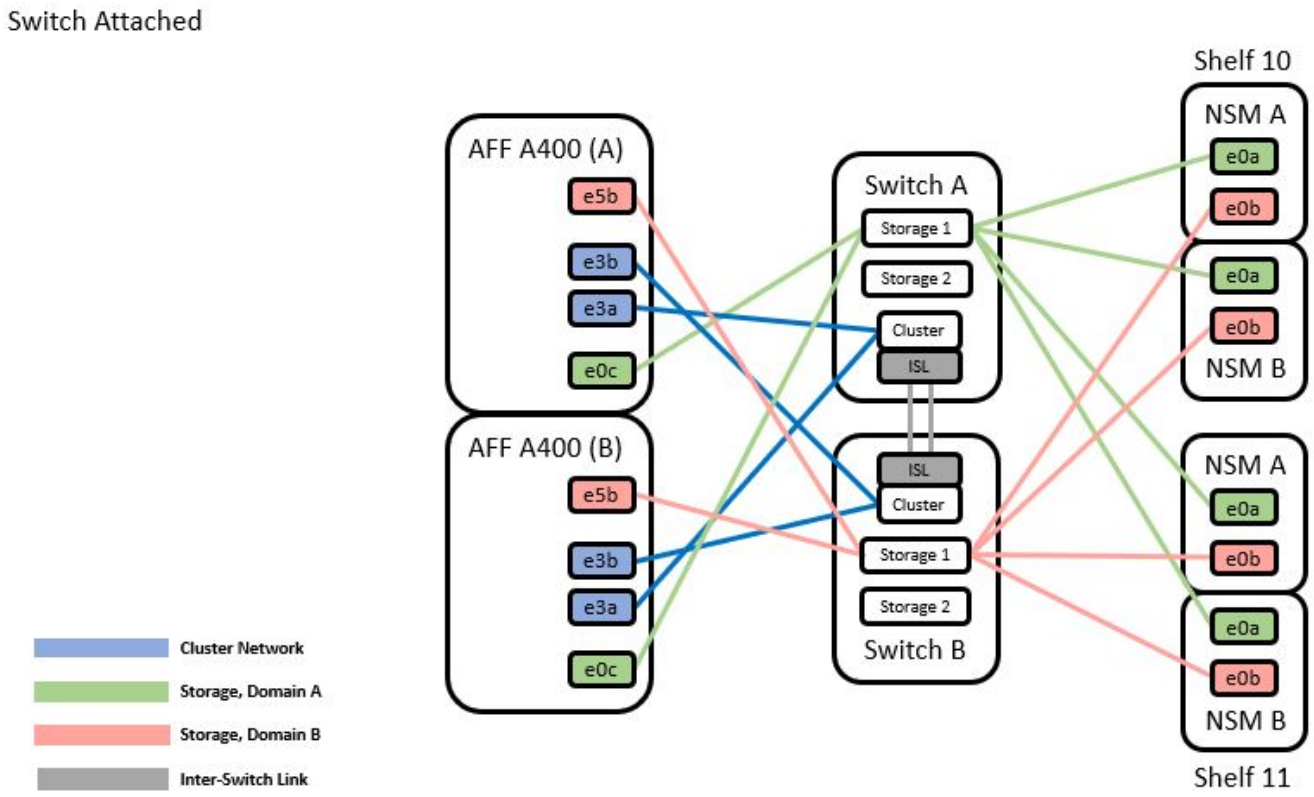

See the Hardware Universe for more information on switch ports.

Cable NS224 storage as direct-attached

If you want to cable NS224 storage as direct-attached instead of using the shared switch storage ports, follow the direct-attached diagram:

Direct Attached

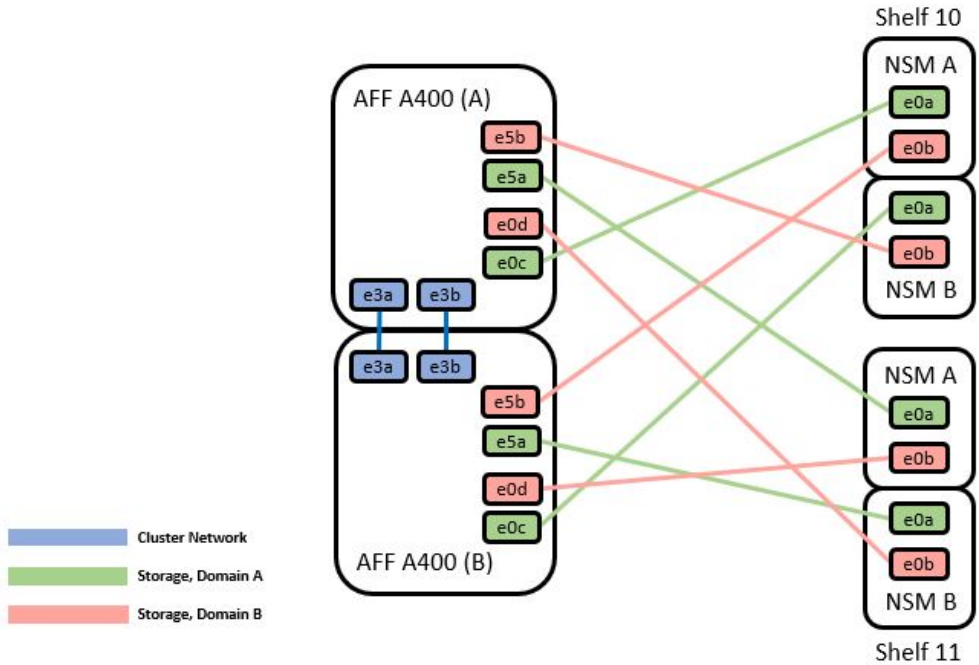

	Port	Node
Path_A	e0c	Node_A
		Node_B
	e5a	Node_A
		Node_B
Path_B	e5b	Node_A
		Node_B
	e0d	Node_A
		Node_B

See the Hardware Universe for more information on switch ports.

Cisco Nexus 9336C-FX2 cabling worksheet

If you want to document the supported platforms, you must complete the blank cabling worksheet by using completed sample cabling worksheet as a guide.

The sample port definition on each pair of switches is as follows:

	Switch A			Switch B	
Switch Port	Port Role	Port Usage	Switch Port	Port Role	Port Usage
1	Cluster	40/100GbE	1	Cluster	40/100GbE
2	Cluster	40/100GbE	2	Cluster	40/100GbE
3	Cluster	40/100GbE	3	Cluster	40/100GbE
4	Cluster	40/100GbE	4	Cluster	40/100GbE
5	Cluster	40/100GbE	5	Cluster	40/100GbE
6	Cluster	40/100GbE	6	Cluster	40/100GbE
7	Cluster	40/100GbE	7	Cluster	40/100GbE
8	Cluster	40/100GbE	8	Cluster	40/100GbE
9	Cluster	40GbE w/4x10GbE b/o	9	Cluster	40GbE w/4x10GbE b/o
10	Cluster	100GbE w/4x25GbE b/o	10	Cluster	100GbE w/4x25GbE b/o
11	Storage	100GbE	11	Storage	100GbE
12	Storage	100GbE	12	Storage	100GbE
13	Storage	100GbE	13	Storage	100GbE
14	Storage	100GbE	14	Storage	100GbE
15	Storage	100GbE	15	Storage	100GbE
16	Storage	100GbE	16	Storage	100GbE
17	Storage	100GbE	17	Storage	100GbE
18	Storage	100GbE	18	Storage	100GbE
19	Storage	100GbE	19	Storage	100GbE
20	Storage	100GbE	20	Storage	100GbE
21	Storage	100GbE	21	Storage	100GbE
22	Storage	100GbE	22	Storage	100GbE
23	Storage	100GbE	23	Storage	100GbE
24	Storage	100GbE	24	Storage	100GbE
25	Storage	100GbE	25	Storage	100GbE
26	Storage	100GbE	26	Storage	100GbE
27	Storage	100GbE	27	Storage	100GbE
28	Storage	100GbE	28	Storage	100GbE
29	Storage	100GbE	29	Storage	100GbE
30	Storage	100GbE	30	Storage	100GbE
31	Storage	100GbE	31	Storage	100GbE
32	Storage	100GbE	32	Storage	100GbE
33	Storage	100GbE	33	Storage	100GbE
34	Storage	100GbE	34	Storage	100GbE
35	ISL	100GbE	35	ISL	100GbE
36	ISL	100GbE	36	ISL	100GbE

Where:

- 100G ISL to switch A port 35
- 100G ISL to switch A port 36
- 100G ISL to switch B port 35
- 100G ISL to switch B port 36

Blank cabling worksheet

You can use the blank cabling worksheet to document the platforms that are supported as nodes in a cluster. The Supported Cluster Connections table of the Hardware Universe defines the cluster ports used by the platform.

	Switch A			Switch B	
Switch Port	Port Role	Port Usage	Switch Port	Port Role	Port Usage
1			1		
2			2		
3			3		
4			4		
5			5		
6			6		
7			7		
8			8		
9			9		
10			10		
11			11		
12			12		
13			13		
14			14		
15			15		
16			16		
17			17		
18			18		
19			19		
20			20		
21			21		
22			22		
23			23		
24			24		
25			25		
26			26		
27			27		
28			28		
29			29		
30			30		
31			31		
32			32		
33			33		
34			34		
35			35		
36			36		

Where:

- 100G ISL to switch A port 35
- 100G ISL to switch A port 36
- 100G ISL to switch B port 35
- 100G ISL to switch B port 36

Install Cisco Nexus 9336C-FX2 shared switches

Follow these instructions to configure Cisco Nexus 9336C-FX2 shared switches.

What you'll need

- Required shared switch documentation, controller documentation and ONTAP documentation. See Documentation requirements for Cisco Nexus 9336C-FX2 shared switches and NetApp ONTAP documentation.
- Applicable licenses, network and configuration information, and cables.
- Completed cabling worksheets. See Complete the Cisco Nexus 9336C-FX2 cabling worksheet. For more information on cabling, refer to the Hardware Universe.

Steps

1. Rack the switches, controllers and NS224 NVMe storage shelves.

   See the Racking instructions to learn how to rack the switch in a NetApp cabinet.

2. Power on the switches, controllers and NS224 NVMe storage shelves.

What's next?

Go to Configure Cisco Nexus 9336C-FX2 shared switch.

Configure Cisco Nexus 9336C-FX2 shared switches

Follow these instructions to configure Cisco Nexus 9336C-FX2 shared switches.

What you'll need

- Required shared switch documentation, controller documentation and ONTAP documentation. See Documentation requirements for Cisco Nexus 9336C-FX2 shared switches and NetApp ONTAP documentation.
- Applicable licenses, network and configuration information, and cables.
- Completed cabling worksheets. See Complete the Cisco Nexus 9336C-FX2 cabling worksheet. For more information on cabling, refer to the Hardware Universe.

Steps

1. Perform an initial configuration of the switches.

   For configuration, you need the appropriate number and type of cables and cable connectors for your switches.

   Depending on the type of switch you are initially configuring, you need to connect to the switch console port with the included console cable; you also need to provide specific network information.

2. Boot the switch.

   Provide the applicable responses to the following initial setup questions when you first boot the switch.

   Your site's security policy defines the responses and services to enable.

   a. Abort Auto Provisioning and continue with normal setup? (yes/no)

      Respond with **yes**. The default is no.

   b. Do you want to enforce secure password standard? (yes/no)

      Respond with **yes**. The default is yes.

c. Enter the password for admin.

   The default password is admin; you must create a new, strong password.

   A weak password can be rejected.

d. Would you like to enter the basic configuration dialog? (yes/no)

   Respond with **yes** at the initial configuration of the switch.

e. Create another login account? (yes/no)

   Your answer depends on your site's policies on alternate administrators. The default is no.

f. Configure read-only SNMP community string? (yes/no)

   Respond with **no**. The default is no.

g. Configure read-write SNMP community string? (yes/no)

   Respond with **no**. The default is no.

h. Enter the switch name.

   The switch name is limited to 63 alphanumeric characters.

i. Continue with out-of-band (mgmt0) management configuration? (yes/no)

   Respond with **yes** (the default) at that prompt. At the mgmt0 IPv4 address: prompt, enter your IP address: ip_address

j. Configure the default-gateway? (yes/no)

   Respond with **yes**. At the IPv4 address of the default-gateway: prompt, enter your default_gateway.

k. Configure advanced IP options? (yes/no)

   Respond with **no**. The default is no.

l. Enable the telnet service? (yes/no)

   Respond with **no**. The default is no.

m. Enable SSH service? (yes/no)

   Respond with **yes**. The default is yes.

   > SSH is recommended when using Cluster Switch Health Monitor (CSHM) for its log collection features. SSHv2 is also recommended for enhanced security.

n. Enter the type of SSH key you want to generate (dsa/rsa/rsa1). The default is rsa.

o. Enter the number of key bits (1024- 2048).

p. Configure the NTP server? (yes/no)

   Respond with **no**. The default is no.

q. Configure default interface layer (L3/L2):

   Respond with **L2**. The default is L2.

r. Configure default switch port interface state (shut/noshut):

   Respond with **noshut**. The default is noshut.

s. Configure CoPP system profile (strict/moderate/lenient/dense):

   Respond with **strict**. The default is strict.

t. Would you like to edit the configuration? (yes/no)

   You should see the new configuration at this point. Review and make any necessary changes to the configuration you just entered. Respond with no at the prompt if you are satisfied with the configuration. Respond with **yes** if you want to edit your configuration settings.

u. Use this configuration and save it? (yes/no)

   Respond with **yes** to save the configuration. This automatically updates the kickstart and system images.

3. Verify the configuration choices you made in the display that appears at the end of the setup, and make sure that you save the configuration.

   > If you do not save the configuration at this stage, none of the changes will be in effect the next time you reboot the switch.

4. Check the version on the cluster network switches, and if necessary, download the NetApp-supported version of the software to the switches from the Cisco software download page.

What's next?

Depending on your configuration, you can install switch in NetApp cabinet. Otherwise, go to Prepare to install NX-OS and RCF.

Install a Cisco Nexus 9336C-FX2 switch in a NetApp cabinet

Depending on your configuration, you might need to install the Cisco Nexus 9336C-FX2 switch and pass-through panel in a NetApp cabinet. Standard brackets are included with the switch.

What you'll need

- For each switch, you must supply the eight 10-32 or 12-24 screws and clip nuts to mount the brackets and slider rails to the front and rear cabinet posts.
- You must use the Cisco standard rail kit to install the switch in a NetApp cabinet.

> The jumper cords are not included with the pass-through kit and should be included with your switches. If they were not shipped with the switches, you can order them from NetApp (part number X1558A-R6).

Required documentation

Review the initial preparation requirements, kit contents, and safety precautions in the Cisco Nexus 9000 Series Hardware Installation Guide.

Steps

1. Install the pass-through blanking panel in the NetApp cabinet.

   The pass-through panel kit is available from NetApp (part number X8784-R6).

   The NetApp pass-through panel kit contains the following hardware:

   - One pass-through blanking panel
   - Four 10-32 x .75 screws
   - Four 10-32 clip nuts

     a. Determine the vertical location of the switches and blanking panel in the cabinet.

        In this procedure, the blanking panel will be installed in U40.

     b. Install two clip nuts on each side in the appropriate square holes for front cabinet rails.

     c. Center the panel vertically to prevent intrusion into adjacent rack space, and then tighten the screws.

     d. Insert the female connectors of both 48-inch jumper cords from the rear of the panel and through the brush assembly.

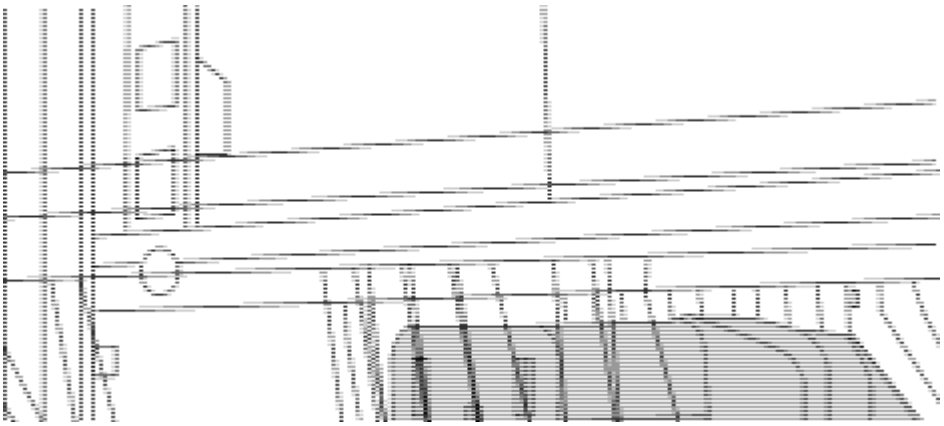

(1) Female connector of the jumper cord.

2. Install the rack-mount brackets on the Nexus 9336C-FX2 switch chassis.

   a. Position a front rack-mount bracket on one side of the switch chassis so that the mounting ear is aligned with the chassis faceplate (on the PSU or fan side), and then use four M4 screws to attach the bracket to the chassis.

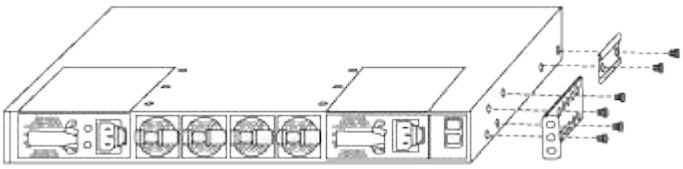

   b. Repeat step 2a with the other front rack-mount bracket on the other side of the switch.

   c. Install the rear rack-mount bracket on the switch chassis.

d. Repeat step 2c with the other rear rack-mount bracket on the other side of the switch.

3. Install the clip nuts in the square hole locations for all four IEA posts.

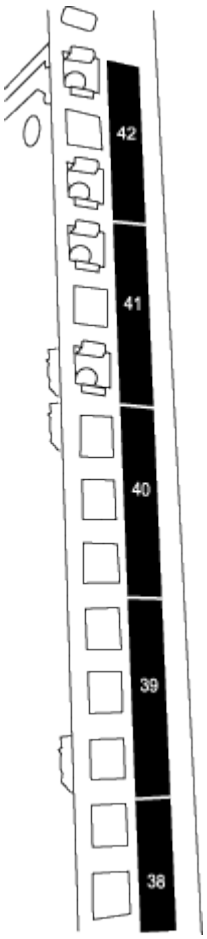

The two 9336C-FX2 switches will always be mounted in the top 2U of the cabinet RU41 and 42.

4. Install the slider rails in the cabinet.

a. Position the first slider rail at the RU42 mark on the back side of the rear left post, insert screws with the matching thread type, and then tighten the screws with your fingers.

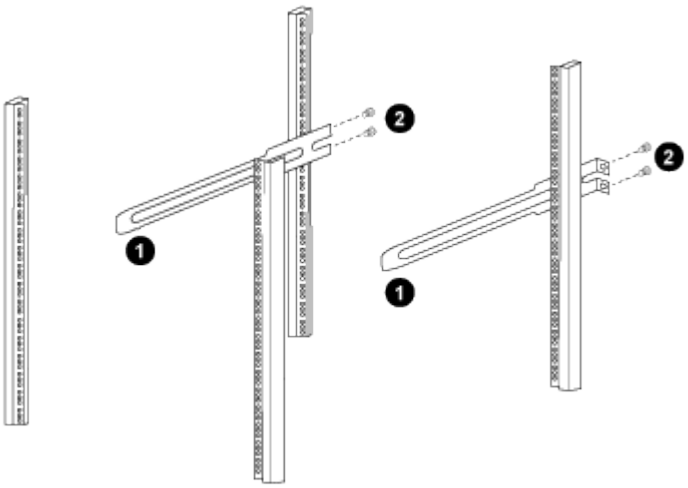

(1) As you gently slide the slider rail, align it to the screw holes in the rack.

(2) Tighten the screws of the slider rails to the cabinet posts.

b. Repeat step 4a for the right side rear post.

c. Repeat steps 4a and 4b at the RU41 locations on the cabinet.

5. Install the switch in the cabinet.

> This step requires two people: one person to support the switch from the front and another to guide the switch into the rear slider rails.

a. Position the back of the switch at RU41.

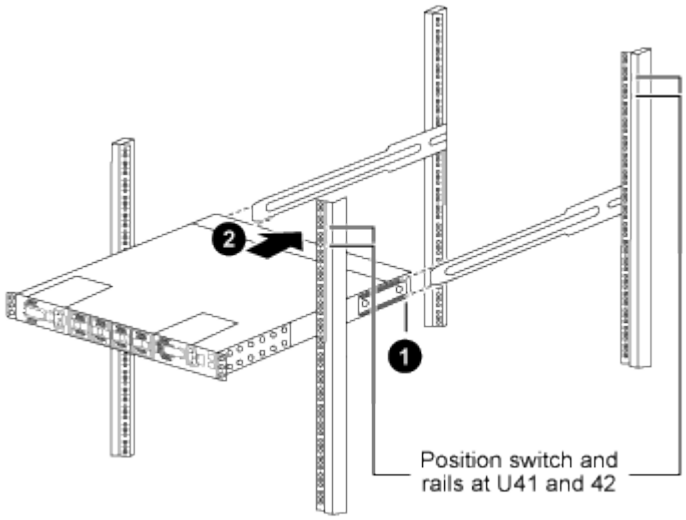

(1) As the chassis is pushed toward the rear posts, align the two rear rack-mount guides with the slider rails.

(2) Gently slide the switch until the front rack-mount brackets are flush with the front posts.

b. Attach the switch to the cabinet.

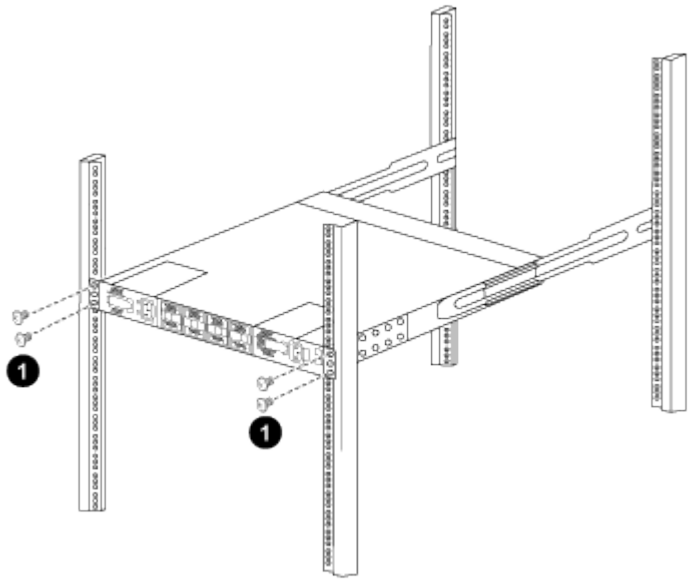

(1) With one person holding the front of the chassis level, the other person should fully tighten the four rear screws to the cabinet posts.

c. With the chassis now supported without assistance, fully tighten the front screws to the posts.

d. Repeat steps 5a through 5c for the second switch at the RU42 location.

> By using the fully installed switch as a support, it is not necessary to hold the front of the second switch during the installation process.

6. When the switches are installed, connect the jumper cords to the switch power inlets.
7. Connect the male plugs of both jumper cords to the closest available PDU outlets.

> To maintain redundancy, the two cords must be connected to different PDUs.

8. Connect the management port on each 9336C-FX2 switch to either of the management switches (if ordered) or connect them directly to your management network.

   The management port is the upper-right port located on the PSU side of the switch. The CAT6 cable for each switch needs to be routed through the pass-through panel after the switches are installed to connect to the management switches or management network.

Copyright information

Copyright © 2024 NetApp, Inc. All Rights Reserved. Printed in the U.S. No part of this document covered by copyright may be reproduced in any form or by any means—graphic, electronic, or mechanical, including photocopying, recording, taping, or storage in an electronic retrieval system—without prior written permission of the copyright owner.

Software derived from copyrighted NetApp material is subject to the following license and disclaimer:

THIS SOFTWARE IS PROVIDED BY NETAPP “AS IS” AND WITHOUT ANY EXPRESS OR IMPLIED WARRANTIES, INCLUDING, BUT NOT LIMITED TO, THE IMPLIED WARRANTIES OF MERCHANTABILITY AND FITNESS FOR A PARTICULAR PURPOSE, WHICH ARE HEREBY DISCLAIMED. IN NO EVENT SHALL NETAPP BE LIABLE FOR ANY DIRECT, INDIRECT, INCIDENTAL, SPECIAL, EXEMPLARY, OR CONSEQUENTIAL DAMAGES (INCLUDING, BUT NOT LIMITED TO, PROCUREMENT OF SUBSTITUTE GOODS OR SERVICES; LOSS OF USE, DATA, OR PROFITS; OR BUSINESS INTERRUPTION) HOWEVER CAUSED AND ON ANY THEORY OF LIABILITY, WHETHER IN CONTRACT, STRICT LIABILITY, OR TORT (INCLUDING NEGLIGENCE OR OTHERWISE) ARISING IN ANY WAY OUT OF THE USE OF THIS SOFTWARE, EVEN IF ADVISED OF THE POSSIBILITY OF SUCH DAMAGE.

NetApp reserves the right to change any products described herein at any time, and without notice. NetApp assumes no responsibility or liability arising from the use of products described herein, except as expressly agreed to in writing by NetApp. The use or purchase of this product does not convey a license under any patent rights, trademark rights, or any other intellectual property rights of NetApp.

The product described in this manual may be protected by one or more U.S. patents, foreign patents, or pending applications.

LIMITED RIGHTS LEGEND: Use, duplication, or disclosure by the government is subject to restrictions as set forth in subparagraph (b)(3) of the Rights in Technical Data -Noncommercial Items at DFARS 252.227-7013 (FEB 2014) and FAR 52.227-19 (DEC 2007).

Data contained herein pertains to a commercial product and/or commercial service (as defined in FAR 2.101) and is proprietary to NetApp, Inc. All NetApp technical data and computer software provided under this Agreement is commercial in nature and developed solely at private expense. The U.S. Government has a non-exclusive, non-transferrable, nonsublicensable, worldwide, limited irrevocable license to use the Data only in connection with and in support of the U.S. Government contract under which the Data was delivered. Except as provided herein, the Data may not be used, disclosed, reproduced, modified, performed, or displayed without the prior written approval of NetApp, Inc. United States Government license rights for the Department of Defense are limited to those rights identified in DFARS clause 252.227-7015(b) (FEB 2014).

Trademark information

NETAPP, the NETAPP logo, and the marks listed at http://www.netapp.com/TM are trademarks of NetApp, Inc. Other company and product names may be trademarks of their respective owners.