Install and setup

Install and maintain

NetApp
March 22, 2024

This PDF was generated from https://docs.netapp.com/us-en/ontap-systems/a150/install-setup.html on March 22, 2024. Always check docs.netapp.com for the latest.

Table of Contents

Install and setup 1
Start here: Choose your installation and setup experience 1
Quick guide - AFF A150 1
Video steps - AFF A150 1
Detailed guide - AFF A150 1

Install and setup

Start here: Choose your installation and setup experience

For most configurations, you can choose from different content formats.

- Quick steps

  A printable PDF of step-by-step instructions with live links to additional content.

- Video steps

  Video step-by-step instructions.

- Detailed steps

  Online step-by-step instructions with live links to additional content.

If your system is in a MetroCluster IP configuration, see the Install MetroCluster IP Configuration instructions.

Quick guide - AFF A150

The Installation and Setup instructions give graphic instructions for a typical installation of your system, from racking and cabling, through initial system bring-up. Use this guide if you are familiar with installing NetApp systems.

Use the xref:./a150/AFF A150 System Installation and Setup Instructions

> The ASA A150 uses the same installation procedure as the AFF A150 system.

Video steps - AFF A150

The following video shows how to install and cable your system.

Animation - Install and setup of an AFF A150

If you have a MetroCluster configuration, use the MetroCluster documentation.

Detailed guide - AFF A150

This section gives detailed step-by-step instructions for installing an AFF A150 system.

If you have a MetroCluster configuration, use the MetroCluster documentation.

Step 1: Prepare for installation

To install your AFF A150 system, you create an account on the NetApp Support Site, register your system, and obtain your license keys. You also need to inventory the appropriate number and type of cables for your system and collect specific network information.

Before you begin

- Make sure you have access to NetApp Hardware Universe (HWU) for information about site requirements as well as additional information on your configured system.
- Make sure you have access to the Release Notes for your version of ONTAP for more information about this system.
- Contact your network administrator for information about connecting your system to the switches.
- Make sure you have the following items at your site:
  - Rack space for the storage system
  - Phillips #2 screwdriver
  - Additional networking cables to connect your system to your network switch and laptop or console with a Web browser
  - A laptop or console with an RJ-45 connection and access to a Web browser

Steps

1. Unpack the contents of all boxes.
2. Record the system serial number from the controllers.

3. Set up your account:
   a. Log in to your existing account or create an account.
   b. Register your system.
4. Download and install Config Advisor on your laptop.
5. Inventory and make a note of the number and types of cables you received.

   The following table identifies the types of cables you might receive. If you receive a cable not listed in the table, see NetApp Hardware Universe to locate the cable and identify its use.

Type of cable…	Part number and length	Connector type	For…
10 GbE cable (order dependent)	X6566B-05-R6 (112-00297), 0.5m X6566B-2-R6 (112-00299), 2m		Cluster interconnect network
10 GbE cable (order dependent)	Part number X6566B-2-R6 (112-00299), 2m or X6566B-3-R6 (112-00300), 3m X6566B-5-R6 (112-00301), 5m		Data
Optical network cables (order dependent)	X6553-R6 (112-00188), 2m X6536-R6 (112-00090), 5m X6554-R6(112-00189), 15m		FC host network

Type of cable…	Part number and length	Connector type	For…
Cat 6, RJ-45 (order dependent)	Part numbers X6585-R6 (112-00291), 3m X6562-R6 (112-00196), 5m		Management network and Ethernet data
Storage (order dependent)	Part number X66030A (112-00435), 0.5m X66031A (112-00436), 1m X66032A (112-00437), 2m X66033A (112-00438), 3m		Storage
Micro-USB console cable	Not applicable		Console connection during software setup on non-Windows or Mac laptop/console
Power cables	Not applicable		Powering up the system

6. Download and complete the Cluster Configuration Worksheet.

Step 2: Install the hardware

You install your system in a 4-post rack or NetApp system cabinet, as applicable.

Steps

1. Install the rail kits, as needed.
2. Install and secure your system using the instructions included with the rail kit.

   You need to be aware of the safety concerns associated with the weight of the system.

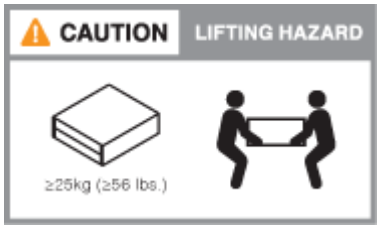

3. Attach cable management devices (as shown).

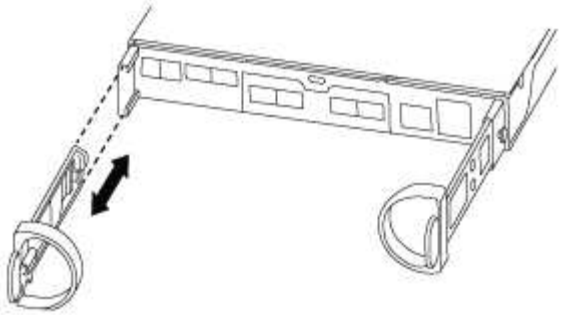

4. Place the bezel on the front of the system.

Step 3: Cable controllers to network

You cable the controllers to your network by using either the two-node switchless cluster method or the switched cluster method.

About this task

The following table identifies the cable type with the call out number and cable color in the illustrations for both two-node switchless cluster network cabling and switched cluster network cabling.

Cabling	Connection type
1	Cluster interconnect
2	Controllers to host data network switches
3	Controllers to management network switch

Option 1: Two-node switchless cluster

Cable your two-node switchless cluster.

About this task

Be sure to check the illustration arrow for the proper cable connector pull-tab orientation.

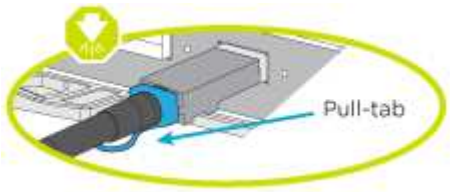

> As you insert the connector, you should feel it click into place; if you do not feel it click, remove it, turn it around and try again.

Steps

1. Cable the cluster interconnect ports e0a to e0a and e0b to e0b with the cluster interconnect cable.

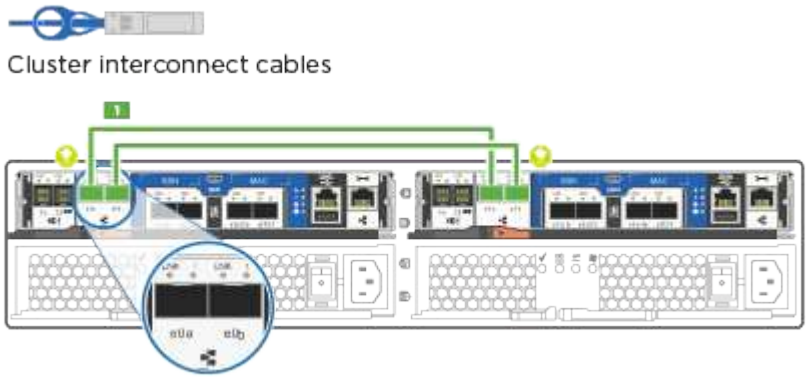

2. Cable the controllers to either a UTA2 data network or an Ethernet network:

UTA2 data network configurations

Use one of the following cable types to cable the UTA2 data ports to your host network.

- For an FC host, use 0c and 0d **or** 0e and 0f.
- For an 10GbE system, use e0c and e0d **or** e0e and e0f.

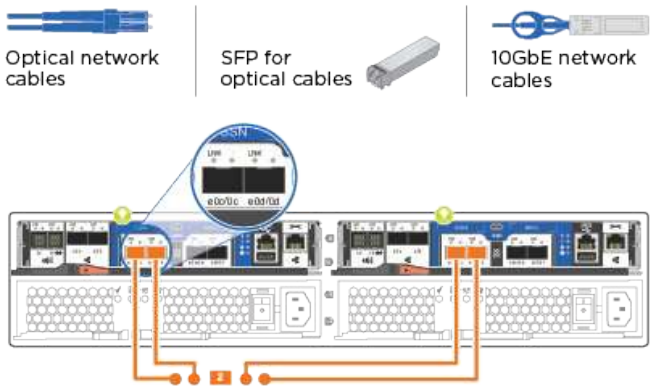

You can connect one port pair as CNA and one port pair as FC, or you can connect both port pairs as CNA or both port pairs as FC.

Ethernet network configurations

Use the Cat 6 RJ45 cable to cable the e0c through e0f ports to your host network. in the following illustration.

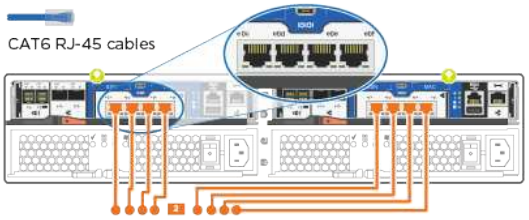

3. Cable the e0M ports to the management network switches with the RJ45 cables.

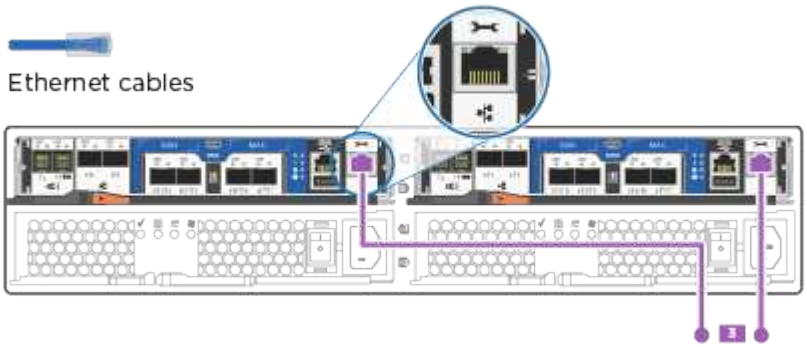

DO NOT plug in the power cords at this point.

Option 2: Switched cluster

Cable your switched cluster.

About this task

Be sure to check the illustration arrow for the proper cable connector pull-tab orientation.

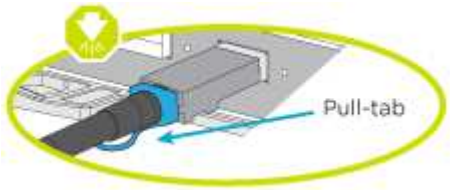

As you insert the connector, you should feel it click into place; if you do not feel it click, remove it, turn it around and try again.

Steps

1. For each controller module, cable e0a and e0b to the cluster interconnect switches with the cluster interconnect cable.

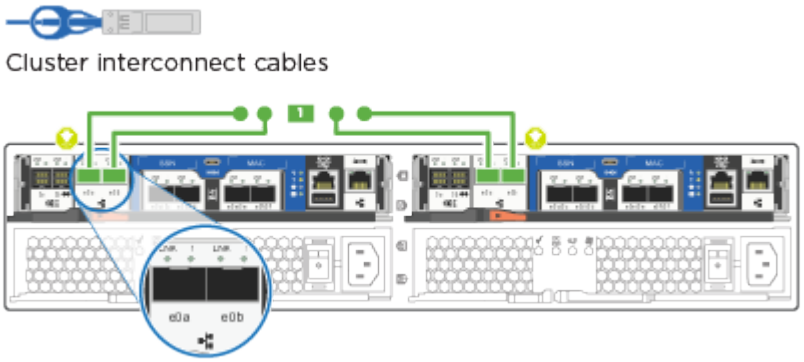

2. You can use either the UTA2 data network ports or the ethernet data network ports to connect the controllers to your host network:

UTA2 data network configurations

Use one of the following cable types to cable the UTA2 data ports to your host network.

- For an FC host, use 0c and 0d **or** 0e and 0f.
- For an 10GbE system, use e0c and e0d **or** e0e and e0f.

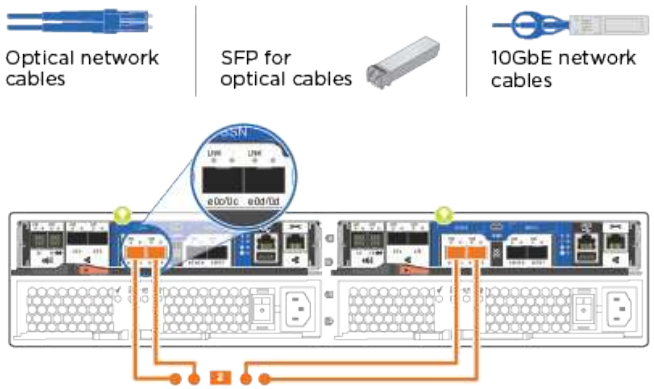

You can connect one port pair as CNA and one port pair as FC, or you can connect both port pairs as CNA or both port pairs as FC.

Ethernet network configurations

Use the Cat 6 RJ45 cable to cable the e0c through e0f ports to your host network.

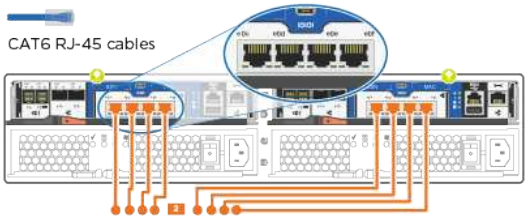

3. Cable the e0M ports to the management network switches with the RJ45 cables.

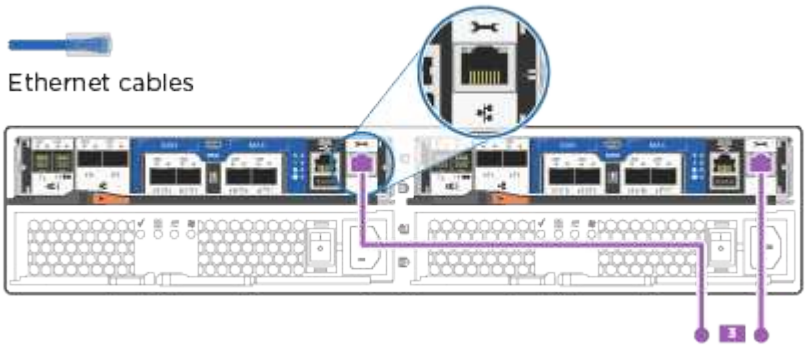

DO NOT plug in the power cords at this point.

Step 4: Cable controllers to drive shelves

Cable the controllers to your shelves using the onboard storage ports. NetApp recommends MP-HA cabling for systems with external storage.

About this task

- If you have a SAS tape drive, you can use single-path cabling. If you have no external shelves, MP-HA cabling to internal drives is optional (not shown) if the SAS cables are ordered with the system.
- You must cable the shelf-to-shelf connections, and then cable both controllers to the drive shelves.
- Be sure to check the illustration arrow for the proper cable connector pull-tab orientation.

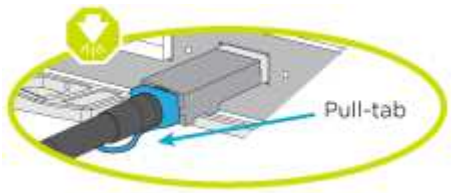

Steps

1. Cable the HA pair with external drive shelves.

   The following example shows cabling for DS224C drive shelves. The cabling is similar with other supported drive shelves.

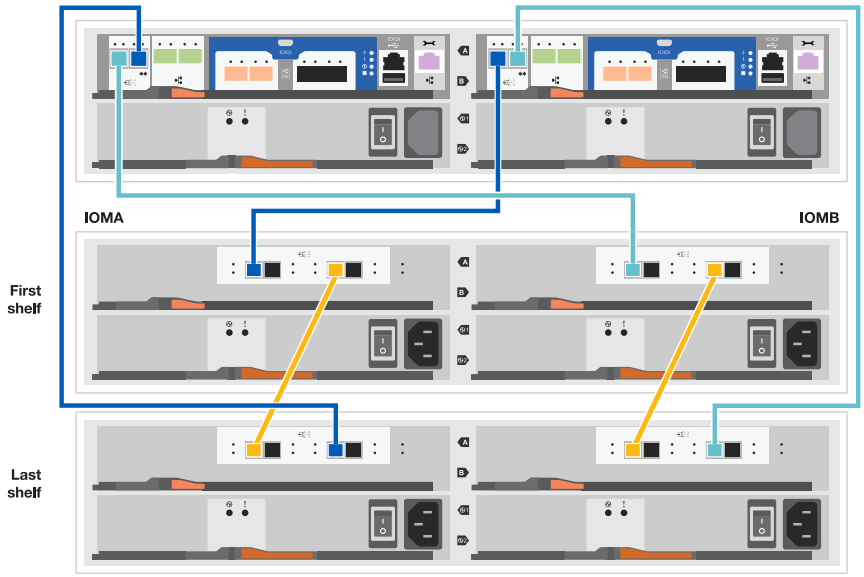

2. Cable the shelf-to-shelf ports.
   - Port 3 on IOM A to port 1 on the IOM A on the shelf directly below.
   - Port 3 on IOM B to port 1 on the IOM B on the shelf directly below.

mini-SAS HD to mini-SAS HD cables

3. Connect each node to IOM A in the stack.
   - Controller 1 port 0b to IOM A port 3 on last drive shelf in the stack.
   - Controller 2 port 0a to IOM A port 1 on the first drive shelf in the stack.

     mini-SAS HD to mini-SAS HD cables

4. Connect each node to IOM B in the stack
   - Controller 1 port 0a to IOM B port 1 on first drive shelf in the stack.
   - Controller 2 port 0b to IOM B port 3 on the last drive shelf in the stack. mini-SAS HD to mini-SAS HD cables

If you have more than one drive shelf stack, see Installing and cabling for your drive shelf type.

Step 5: Complete system setup

You can complete the system setup and configuration using cluster discovery with only a connection to the switch and laptop, or by connecting directly to a controller in the system and then connecting to the management switch.

Option 1: If network discovery is enabled

If you have network discovery enabled on your laptop, you can complete system setup and configuration using automatic cluster discovery.

Steps

1. Use the following animation to set one or more drive shelf IDs

   Animation - Set drive shelf IDs

2. Plug the power cords into the controller power supplies, and then connect them to power sources on different circuits.
3. Turn on the power switches to both nodes.

Initial booting may take up to eight minutes.

4. Make sure that your laptop has network discovery enabled.

   See your laptop's online help for more information.

5. Connect your laptop to the Management switch.

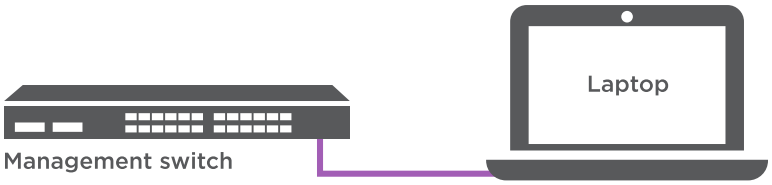

6. Select an ONTAP icon listed to discover:

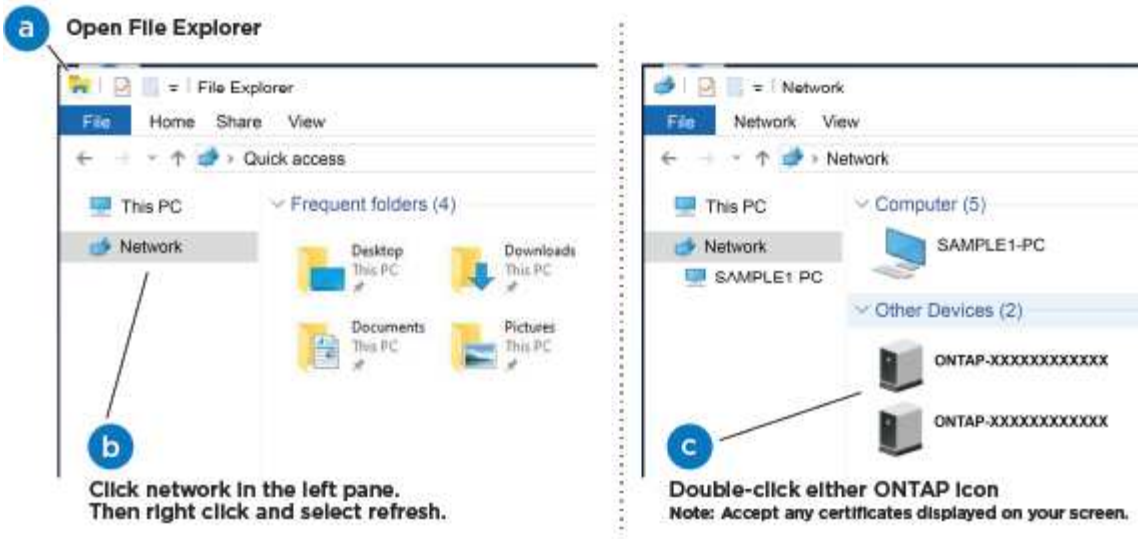

a. Open File Explorer.
b. Click network in the left pane.
c. Right click and select refresh.
d. Double-click either ONTAP icon and accept any certificates displayed on your screen.

> XXXXX is the system serial number for the target node.

System Manager opens.

7. Configure the system using the data you collected in the ONTAP Configuration Guide.
8. Set up your account and download Active IQ Config Advisor:
   a. Log in to your existing account or create and account.
   b. Register your system.
   c. Download Active IQ Config Advisor.
9. Verify the health of your system by running Config Advisor.
10. After you have completed the initial configuration, go to the ONTAP documentation site for information about configuring additional features in ONTAP.

Option 2: If network discovery is not enabled

If network discovery is not enabled on your laptop, you must complete the configuration and setup using this task.

Steps

1. Cable and configure your laptop or console.
   a. Set the console port on the laptop or console to 115,200 baud with N-8-1.

      See your laptop or console's online help for instructions on how to configure the console port.

   b. Connect the console cable to the laptop or console, and connect the console port on the controller using the console cable that came with your system.

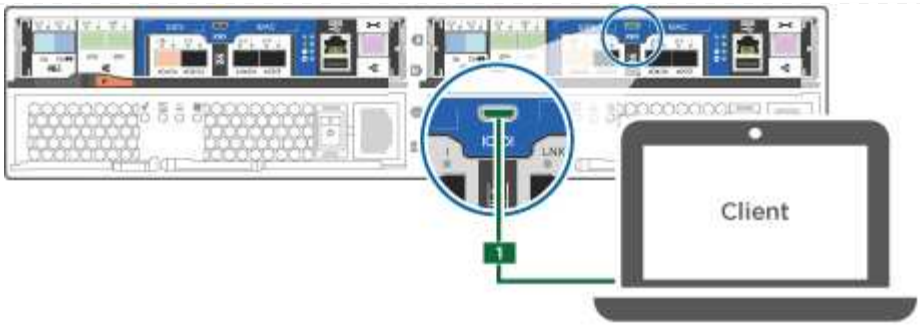

c. Connect the laptop or console to the switch on the management subnet.

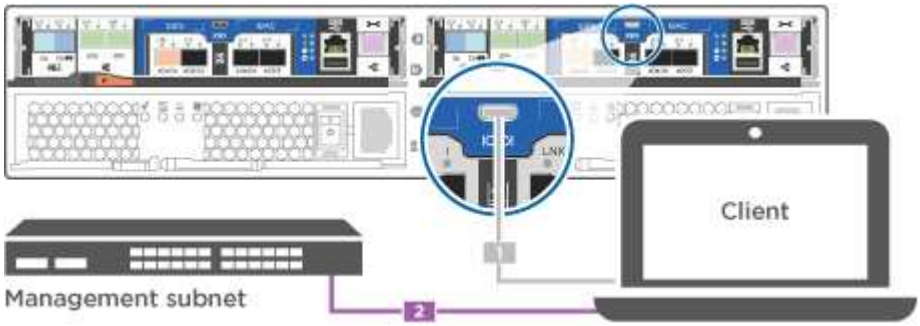

d. Assign a TCP/IP address to the laptop or console, using one that is on the management subnet.

2. Use the following animation to set one or more drive shelf IDs:

   Animation - Set drive shelf IDs

3. Plug the power cords into the controller power supplies, and then connect them to power sources on different circuits.
4. Turn on the power switches to both nodes.

Initial booting may take up to eight minutes.

5. Assign an initial node management IP address to one of the nodes.

If the management network has DHCP…	Then…
Configured	Record the IP address assigned to the new controllers.

If the management network has DHCP…	Then…
Not configured	a. Open a console session using PuTTY, a terminal server, or the equivalent for your environment. Check your laptop or console's online help if you do not know how to configure PuTTY. b. Enter the management IP address when prompted by the script.

6. Using System Manager on your laptop or console, configure your cluster.
   a. Point your browser to the node management IP address.

      The format for the address is https://x.x.x.x.

   b. Configure the system using the data you collected in the ONTAP Configuration Guide.
7. Set up your account and download Active IQ Config Advisor:
   a. Log in to your existing account or create and account.
   b. Register your system.
   c. Download Active IQ Config Advisor.
8. Verify the health of your system by running Config Advisor.
9. After you have completed the initial configuration, go to the ONTAP documentation site for information about configuring additional features in ONTAP.

Copyright information

Copyright © 2024 NetApp, Inc. All Rights Reserved. Printed in the U.S. No part of this document covered by copyright may be reproduced in any form or by any means—graphic, electronic, or mechanical, including photocopying, recording, taping, or storage in an electronic retrieval system—without prior written permission of the copyright owner.

Software derived from copyrighted NetApp material is subject to the following license and disclaimer:

THIS SOFTWARE IS PROVIDED BY NETAPP “AS IS” AND WITHOUT ANY EXPRESS OR IMPLIED WARRANTIES, INCLUDING, BUT NOT LIMITED TO, THE IMPLIED WARRANTIES OF MERCHANTABILITY AND FITNESS FOR A PARTICULAR PURPOSE, WHICH ARE HEREBY DISCLAIMED. IN NO EVENT SHALL NETAPP BE LIABLE FOR ANY DIRECT, INDIRECT, INCIDENTAL, SPECIAL, EXEMPLARY, OR CONSEQUENTIAL DAMAGES (INCLUDING, BUT NOT LIMITED TO, PROCUREMENT OF SUBSTITUTE GOODS OR SERVICES; LOSS OF USE, DATA, OR PROFITS; OR BUSINESS INTERRUPTION) HOWEVER CAUSED AND ON ANY THEORY OF LIABILITY, WHETHER IN CONTRACT, STRICT LIABILITY, OR TORT (INCLUDING NEGLIGENCE OR OTHERWISE) ARISING IN ANY WAY OUT OF THE USE OF THIS SOFTWARE, EVEN IF ADVISED OF THE POSSIBILITY OF SUCH DAMAGE.

NetApp reserves the right to change any products described herein at any time, and without notice. NetApp assumes no responsibility or liability arising from the use of products described herein, except as expressly agreed to in writing by NetApp. The use or purchase of this product does not convey a license under any patent rights, trademark rights, or any other intellectual property rights of NetApp.

The product described in this manual may be protected by one or more U.S. patents, foreign patents, or pending applications.

LIMITED RIGHTS LEGEND: Use, duplication, or disclosure by the government is subject to restrictions as set forth in subparagraph (b)(3) of the Rights in Technical Data -Noncommercial Items at DFARS 252.227-7013 (FEB 2014) and FAR 52.227-19 (DEC 2007).

Data contained herein pertains to a commercial product and/or commercial service (as defined in FAR 2.101) and is proprietary to NetApp, Inc. All NetApp technical data and computer software provided under this Agreement is commercial in nature and developed solely at private expense. The U.S. Government has a non-exclusive, non-transferrable, nonsublicensable, worldwide, limited irrevocable license to use the Data only in connection with and in support of the U.S. Government contract under which the Data was delivered. Except as provided herein, the Data may not be used, disclosed, reproduced, modified, performed, or displayed without the prior written approval of NetApp, Inc. United States Government license rights for the Department of Defense are limited to those rights identified in DFARS clause 252.227-7015(b) (FEB 2014).

Trademark information

NETAPP, the NETAPP logo, and the marks listed at http://www.netapp.com/TM are trademarks of NetApp, Inc. Other company and product names may be trademarks of their respective owners.