Controller module

Install and maintain

NetApp
March 22, 2024

This PDF was generated from https://docs.netapp.com/us-en/ontap-systems/a200/controller-replace-overview.html on March 22, 2024. Always check docs.netapp.com for the latest.

Table of Contents

Controller module . . . 1
Overview of controller module replacement - AFF A200 . . . 1
Shut down the impaired controller - AFF A200 . . . 1
Replace the controller module hardware - AFF A200 . . . 2
Restore and verify the system configuration - AFF A200 . . . 9
Recable the system and reassign disks - AFF A200 . . . 10
Complete system restoration - AFF A200 . . . 14

Controller module

Overview of controller module replacement - AFF A200

You must review the prerequisites for the replacement procedure and select the correct one for your version of the ONTAP operating system.

What you'll need

- All drive shelves must be working properly.
- If your system is in an HA pair, the healthy controller must be able to take over the controller that is being replaced (referred to in this procedure as the "impaired node").

About this task

- You must replace the failed component with a replacement FRU component you received from your provider.
- You must replace a controller module with a controller module of the same model type. You cannot upgrade your system by just replacing the controller module.
- You cannot change any drives or drive shelves as part of this procedure.
- In this procedure, the boot device is moved from the impaired controller to the *replacement* node so that the *replacement* node will boot up in the same version of ONTAP as the old controller module.
- It is important that you apply the commands in these steps on the correct systems:
  - The *impaired* node is the controller that is being replaced.
  - The *replacement* node is the new controller that is replacing the impaired controller.
  - The *healthy* node is the surviving controller.
- You must always capture the controller's console output to a text file.

  This provides you a record of the procedure so that you can troubleshoot any issues that you might encounter during the replacement process.

Shut down the impaired controller - AFF A200

To shut down the impaired controller, you must determine the status of the controller and, if necessary, take over the controller so that the healthy controller continues to serve data from the impaired controller storage.

If you have a cluster with more than two nodes, it must be in quorum. If the cluster is not in quorum or a healthy controller shows false for eligibility and health, you must correct the issue before shutting down the impaired controller; see Synchronize a node with the cluster.

Steps

1. If AutoSupport is enabled, suppress automatic case creation by invoking an AutoSupport message:
   `system node autosupport invoke -node * -type all -message MAINT=_number_of_hours_down_h`

   The following AutoSupport message suppresses automatic case creation for two hours: `cluster1:*> system node autosupport invoke -node * -type all -message MAINT=2h`

2. If the impaired controller is part of an HA pair, disable automatic giveback from the console of the healthy controller: `storage failover modify -node local -auto-giveback false`
3. Take the impaired controller to the LOADER prompt:

If the impaired controller is displaying…	Then…
The LOADER prompt	Go to Remove controller module.
Waiting for giveback…	Press Ctrl-C, and then respond `y`.
System prompt or password prompt (enter system password)	Take over or halt the impaired controller from the healthy controller: `storage failover takeover -ofnode` *`impaired_node_name`* When the impaired controller shows Waiting for giveback…, press Ctrl-C, and then respond `y`.

4. If the system has only one controller module in the chassis, turn off the power supplies, and then unplug the impaired controller's power cords from the power source.

Replace the controller module hardware - AFF A200

To replace the controller module hardware, you must remove the impaired controller, move FRU components to the replacement controller module, install the replacement controller module in the chassis, and then boot the system to Maintenance mode.

Step 1: Remove controller module

To replace the controller module, you must first remove the old controller module from the chassis.

Steps

1. If you are not already grounded, properly ground yourself.
2. Loosen the hook and loop strap binding the cables to the cable management device, and then unplug the system cables and SFPs (if needed) from the controller module, keeping track of where the cables were connected.

   Leave the cables in the cable management device so that when you reinstall the cable management device, the cables are organized.

3. Remove and set aside the cable management devices from the left and right sides of the controller module.

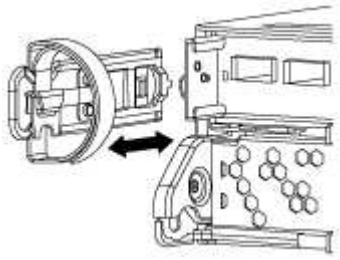

4. If you left the SFP modules in the system after removing the cables, move them to the new controller module.
5. Squeeze the latch on the cam handle until it releases, open the cam handle fully to release the controller module from the midplane, and then, using two hands, pull the controller module out of the chassis.

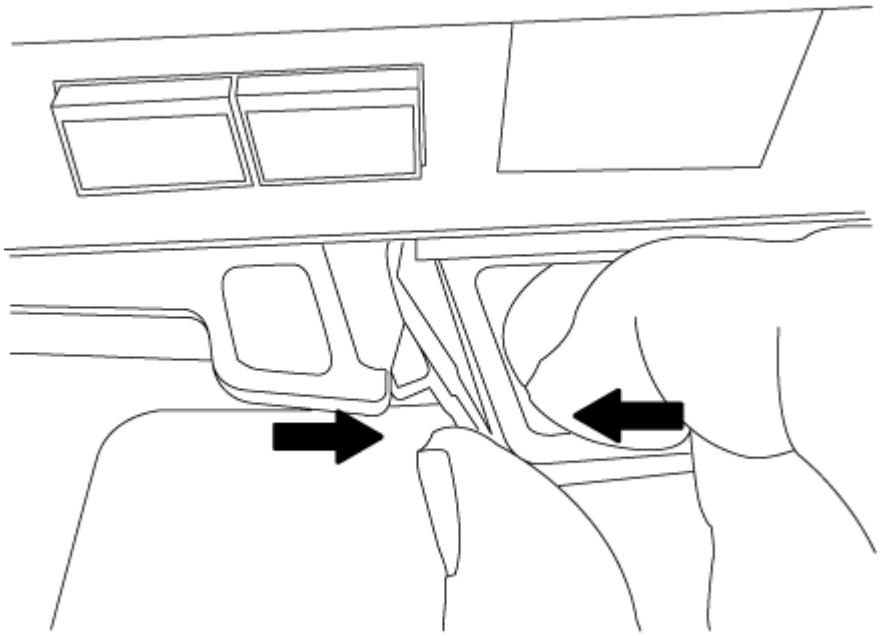

6. Turn the controller module over and place it on a flat, stable surface.
7. Open the cover by sliding in the blue tabs to release the cover, and then swing the cover up and open.

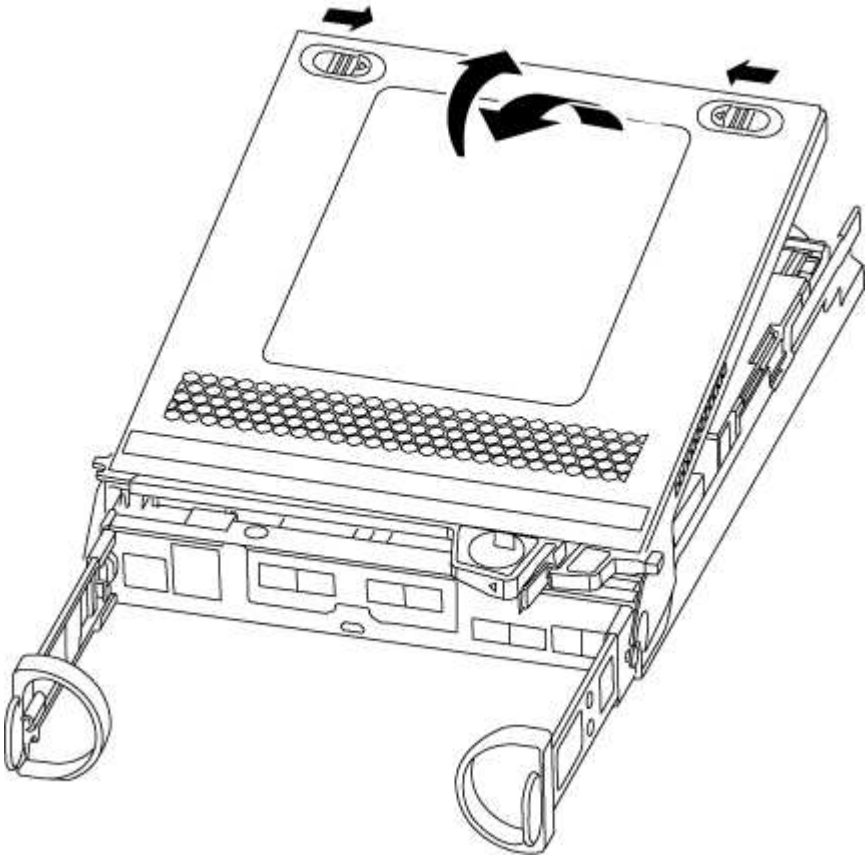

Step 2: Move the boot media

You must locate the boot media and follow the directions to remove it from the old controller module and insert it in the new controller module.

Steps

1. Locate the boot media using the following illustration or the FRU map on the controller module:
2. Press the blue button on the boot media housing to release the boot media from its housing, and then gently pull it straight out of the boot media socket.

   > Do not twist or pull the boot media straight up, because this could damage the socket or the boot media.

3. Move the boot media to the new controller module, align the edges of the boot media with the socket housing, and then gently push it into the socket.
4. Check the boot media to make sure that it is seated squarely and completely in the socket.

   If necessary, remove the boot media and reseat it into the socket.

5. Push the boot media down to engage the locking button on the boot media housing.

Step 3: Move the NVMEM battery

To move the NVMEM battery from the old controller module to the new controller module, you must perform a specific sequence of steps.

Steps

1. Check the NVMEM LED:
   - If your system is in an HA configuration, go to the next step.
   - If your system is in a stand-alone configuration, cleanly shut down the controller module, and then check the NVRAM LED identified by the NV icon.

     > The NVRAM LED blinks while destaging contents to the flash memory when you halt the system. After the destage is complete, the LED turns off.

     - If power is lost without a clean shutdown, the NVMEM LED flashes until the destage is complete, and then the LED turns off.
     - If the LED is on and power is on, unwritten data is stored on NVMEM.

       This typically occurs during an uncontrolled shutdown after ONTAP has successfully booted.

2. Locate the NVMEM battery in the controller module.

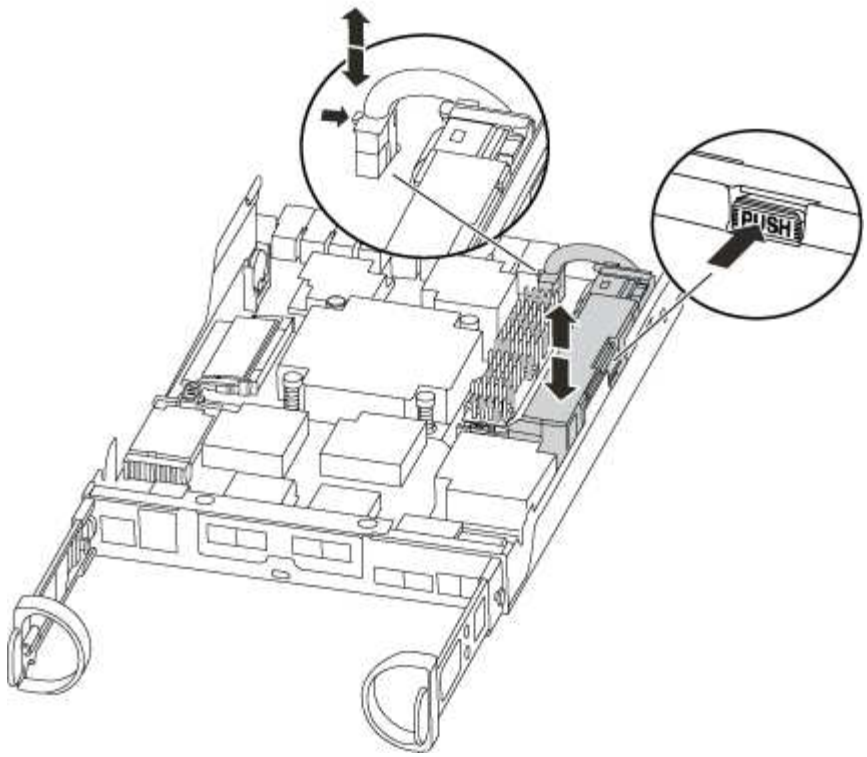

3. Locate the battery plug and squeeze the clip on the face of the battery plug to release the plug from the socket, and then unplug the battery cable from the socket.
4. Grasp the battery and press the blue locking tab marked PUSH, and then lift the battery out of the holder and controller module.
5. Move the battery to the replacement controller module.
6. Loop the battery cable around the cable channel on the side of the battery holder.
7. Position the battery pack by aligning the battery holder key ribs to the “V” notches on the sheet metal side wall.
8. Slide the battery pack down along the sheet metal side wall until the support tabs on the side wall hook into the slots on the battery pack, and the battery pack latch engages and clicks into the opening on the side wall.

Step 4: Move the DIMMs

To move the DIMMs, you must follow the directions to locate and move them from the old controller module into the replacement controller module.

About this task

You must have the new controller module ready so that you can move the DIMMs directly from the impaired controller module to the corresponding slots in the replacement controller module.

Steps

1. Locate the DIMMs on your controller module.
2. Note the orientation of the DIMM in the socket so that you can insert the DIMM in the replacement controller module in the proper orientation.
3. Eject the DIMM from its slot by slowly pushing apart the two DIMM ejector tabs on either side of the DIMM,

and then slide the DIMM out of the slot.

> Carefully hold the DIMM by the edges to avoid pressure on the components on the DIMM circuit board.

The number and placement of system DIMMs depends on the model of your system.

The following illustration shows the location of system DIMMs:

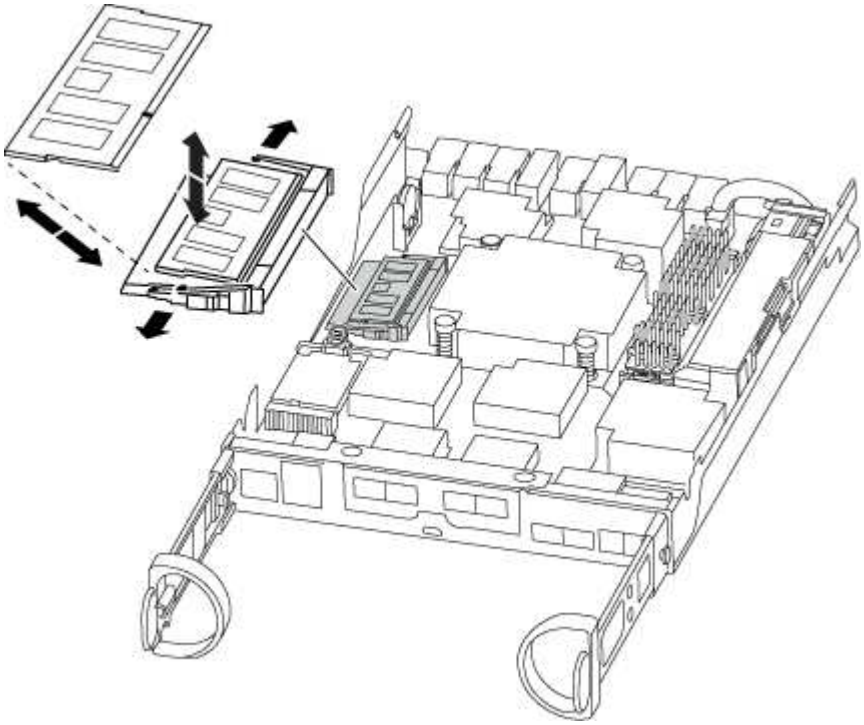

4. Repeat these steps to remove additional DIMMs as needed.
5. Verify that the NVMEM battery is not plugged into the new controller module.
6. Locate the slot where you are installing the DIMM.
7. Make sure that the DIMM ejector tabs on the connector are in the open position, and then insert the DIMM squarely into the slot.

   The DIMM fits tightly in the slot, but should go in easily. If not, realign the DIMM with the slot and reinsert it.

   > Visually inspect the DIMM to verify that it is evenly aligned and fully inserted into the slot.

8. Repeat these steps for the remaining DIMMs.
9. Locate the NVMEM battery plug socket, and then squeeze the clip on the face of the battery cable plug to insert it into the socket.

   Make sure that the plug locks down onto the controller module.

Step 5: Install the controller

After you install the components from the old controller module into the new controller module, you must install the new controller module into the system chassis and boot the operating system.

About this task

For HA pairs with two controller modules in the same chassis, the sequence in which you install the controller module is especially important because it attempts to reboot as soon as you completely seat it in the chassis.

> The system might update system firmware when it boots. Do not abort this process. The procedure requires you to interrupt the boot process, which you can typically do at any time after prompted to do so. However, if the system updates the system firmware when it boots, you must wait until after the update is complete before interrupting the boot process.

Steps

1. If you are not already grounded, properly ground yourself.
2. If you have not already done so, replace the cover on the controller module.
3. Align the end of the controller module with the opening in the chassis, and then gently push the controller module halfway into the system.

   > Do not completely insert the controller module in the chassis until instructed to do so.

4. Cable the management and console ports only, so that you can access the system to perform the tasks in the following sections.

   > You will connect the rest of the cables to the controller module later in this procedure.

5. Complete the reinstallation of the controller module:

If your system is in…	Then perform these steps…
An HA pair	The controller module begins to boot as soon as it is fully seated in the chassis. Be prepared to interrupt the boot process. a. With the cam handle in the open position, firmly push the controller module in until it meets the midplane and is fully seated, and then close the cam handle to the locked position. Do not use excessive force when sliding the controller module into the chassis to avoid damaging the connectors. The controller begins to boot as soon as it is seated in the chassis. b. If you have not already done so, reinstall the cable management device. c. Bind the cables to the cable management device with the hook and loop strap. d. When you see the message `Press Ctrl-C for Boot Menu`, press `Ctrl-C` to interrupt the boot process. If you miss the prompt and the controller module boots to ONTAP, enter `halt`, and then at the LOADER prompt enter `boot_ontap`, press `Ctrl-C` when prompted, and then boot to Maintenance mode. e. Select the option to boot to Maintenance mode from the displayed menu.

If your system is in…	Then perform these steps…
A stand-alone configuration	a. With the cam handle in the open position, firmly push the controller module in until it meets the midplane and is fully seated, and then close the cam handle to the locked position. Do not use excessive force when sliding the controller module into the chassis to avoid damaging the connectors. b. If you have not already done so, reinstall the cable management device. c. Bind the cables to the cable management device with the hook and loop strap. d. Reconnect the power cables to the power supplies and to the power sources, turn on the power to start the boot process, and then press `Ctrl-C` after you see the `Press Ctrl-C for Boot Menu` message. If you miss the prompt and the controller module boots to ONTAP, enter `halt`, and then at the LOADER prompt enter `boot_ontap`, press `Ctrl-C` when prompted, and then boot to Maintenance mode. e. From the boot menu, select the option for Maintenance mode.

During the boot process, you might see the following prompts:

- A prompt warning of a system ID mismatch and asking to override the system ID.
- A prompt warning that when entering Maintenance mode in an HA configuration you must ensure that the healthy controller remains down. You can safely respond `y` to these prompts.

Restore and verify the system configuration - AFF A200

After completing the hardware replacement and booting to Maintenance mode, you verify the low-level system configuration of the replacement controller and reconfigure system settings as necessary.

Step 1: Set and verify system time after replacing the controller

You should check the time and date on the replacement controller module against the healthy controller module in an HA pair, or against a reliable time server in a stand-alone configuration. If the time and date do not match, you must reset them on the replacement controller module to prevent possible outages on clients due to time differences.

About this task

It is important that you apply the commands in the steps on the correct systems:

- The *replacement* node is the new node that replaced the impaired node as part of this procedure.
- The *healthy* node is the HA partner of the *replacement* node.

Steps

1. If the *replacement* node is not at the LOADER prompt, halt the system to the LOADER prompt.
2. On the *healthy* node, check the system time: `cluster date show`

   The date and time are based on the configured timezone.

3. At the LOADER prompt, check the date and time on the *replacement* node: `show date`

   The date and time are given in GMT.

4. If necessary, set the date in GMT on the replacement node: `set date mm/dd/yyyy`
5. If necessary, set the time in GMT on the replacement node: `set time hh:mm:ss`
6. At the LOADER prompt, confirm the date and time on the *replacement* node: `show date`

   The date and time are given in GMT.

Step 2: Verify and set the HA state of the controller module

You must verify the `HA` state of the controller module and, if necessary, update the state to match your system configuration.

Steps

1. In Maintenance mode from the new controller module, verify that all components display the same `HA` state: `ha-config show`

   The value for HA-state can be one of the following:

   - ha
   - non-ha

2. If the displayed system state of the controller module does not match your system configuration, set the `HA` state for the controller module: `ha-config modify controller ha-state`
3. Confirm that the setting has changed: `ha-config show`

Recable the system and reassign disks - AFF A200

Continue the replacement procedure by re-cabling the storage and confirming disk reassignment.

Step 1: Re-cable the system

Recable the controller module's storage and network connections.

Steps

1. Recable the system.

2. Verify that the cabling is correct by using Active IQ Config Advisor.
   a. Download and install Config Advisor.
   b. Enter the information for the target system, and then click Collect Data.
   c. Click the Cabling tab, and then examine the output. Make sure that all disk shelves are displayed and all disks appear in the output, correcting any cabling issues you find.
   d. Check other cabling by clicking the appropriate tab, and then examining the output from Config Advisor.

Step 2: Reassign disks

If the storage system is in an HA pair, the system ID of the new controller module is automatically assigned to the disks when the giveback occurs at the end of the procedure. In a stand-alone system, you must manually reassign the ID to the disks. You must use the correct procedure for your configuration.

Option 1: Verify the system ID change on an HA system

You must confirm the system ID change when you boot the *replacement* controller and then verify that the change was implemented.

About this task

This procedure applies only to systems running ONTAP in an HA pair.

Steps

1. If the *replacement* controller is in Maintenance mode (showing the `*>` prompt, exit Maintenance mode and go to the LOADER prompt: `halt`
2. From the LOADER prompt on the *replacement* controller, boot the controller, entering `y` if you are prompted to override the system ID due to a system ID mismatch.`boot_ontap`
3. Wait until the `Waiting for giveback…` message is displayed on the *replacement* controller console and then, from the healthy controller, verify that the new partner system ID has been automatically assigned: `storage failover show`

   In the command output, you should see a message that the system ID has changed on the impaired controller, showing the correct old and new IDs. In the following example, node2 has undergone replacement and has a new system ID of 151759706.

```
node1> `storage failover show`
                                    Takeover
Node              Partner           Possible     State Description
------------      ------------      --------
-------------------------------------
node1             node2             false        System ID changed on
partner (Old:
                                                 151759755, New:
151759706), In takeover
node2             node1             -            Waiting for giveback
(HA mailboxes)
```

4. From the healthy controller, verify that any coredumps are saved:

a. Change to the advanced privilege level: `set -privilege advanced`

   You can respond `Y` when prompted to continue into advanced mode. The advanced mode prompt appears (*>).

b. Save any coredumps: `system node run -node local-node-name partner savecore`

c. Wait for the `savecore`command to complete before issuing the giveback.

   You can enter the following command to monitor the progress of the savecore command: `system node run -node local-node-name partner savecore -s`

d. Return to the admin privilege level: `set -privilege admin`

5. If your storage system has Storage or Volume Encryption configured, you must restore Storage or Volume Encryption functionality by using one of the following procedures, depending on whether you are using onboard or external key management:
   - Restore onboard key management encryption keys
   - Restore external key management encryption keys
6. Give back the controller:

   a. From the healthy controller, give back the replaced controller's storage: `storage failover giveback -ofnode replacement_node_name`

      The *replacement* controller takes back its storage and completes booting.

      If you are prompted to override the system ID due to a system ID mismatch, you should enter `y`.

      > If the giveback is vetoed, you can consider overriding the vetoes.

      Find the High-Availability Configuration content for your version of ONTAP 9

   b. After the giveback has been completed, confirm that the HA pair is healthy and that takeover is possible: `storage failover show`

      The output from the `storage failover show` command should not include the System ID changed on partner message.

7. Verify that the disks were assigned correctly: `storage disk show -ownership`

   The disks belonging to the *replacement* controller should show the new system ID. In the following example, the disks owned by node1 now show the new system ID, 1873775277:

```
node1> `storage disk show -ownership`

Disk  Aggregate Home  Owner  DR Home  Home ID    Owner ID  DR Home ID
Reserver  Pool
----- ------    ----- ------ -------- -------    -------    -------
---------  ---
1.0.0  aggr0_1  node1 node1  -        1873775277 1873775277  -
1873775277 Pool0
1.0.1  aggr0_1  node1 node1           1873775277 1873775277  -
1873775277 Pool0
.
.
.
```

8. Verify that the expected volumes are present for each controller: `vol show -node node-name`
9. If you disabled automatic takeover on reboot, enable it from the healthy controller: `storage failover modify -node` *`replacement-node-name`* `-onreboot true`

Option 2: Manually reassign the system ID on a stand-alone system in ONTAP

In a stand-alone system, you must manually reassign disks to the new controller's system ID before you return the system to normal operating condition.

About this task

This procedure applies only to systems that are in a stand-alone configuration.

Steps

1. If you have not already done so, reboot the *replacement* node, interrupt the boot process by pressing Ctrl-C, and then select the option to boot to Maintenance mode from the displayed menu.
2. You must enter `Y` when prompted to override the system ID due to a system ID mismatch.
3. View the system IDs: `disk show -a`
4. You should make a note of the old system ID, which is displayed as part of the disk owner column.

   The following example shows the old system ID of 118073209:

```
*> disk show -a
Local System ID: 118065481

  DISK      OWNER                   POOL   SERIAL NUMBER  HOME
--------    -------------           -----  -------------  -------------
disk_name    system-1  (118073209)  Pool0  J8XJE9LC       system-1
(118073209)
disk_name    system-1  (118073209)  Pool0  J8Y478RC       system-1
(118073209)
.
.
.
```

5. Reassign disk ownership by using the system ID information obtained from the disk show command: `disk reassign -s old system ID disk reassign -s 118073209`
6. Verify that the disks were assigned correctly: `disk show -a`

   The disks belonging to the replacement node should show the new system ID. The following example now show the disks owned by system-1 the new system ID, 118065481:

```
*> disk show -a
Local System ID: 118065481

  DISK      OWNER                   POOL   SERIAL NUMBER  HOME
--------    -------------           -----  -------------  -------------
disk_name    system-1  (118065481)  Pool0  J8Y0TDZC       system-1
(118065481)
disk_name    system-1  (118065481)  Pool0  J8Y0TDZC       system-1
(118065481)
.
.
.
```

7. If your storage system has Storage or Volume Encryption configured, you must restore Storage or Volume Encryption functionality by using one of the following procedures, depending on whether you are using onboard or external key management:
   - Restore onboard key management encryption keys
   - Restore external key management encryption keys
8. Boot the node: `boot_ontap`

Complete system restoration - AFF A200

To restore your system to full operation, you must restore the NetApp Storage Encryption configuration (if necessary), and install licenses for the new controller, and return the

failed part to NetApp, as described in the RMA instructions shipped with the kit.

Step 1: Install licenses for the replacement controller in ONTAP

You must install new licenses for the *replacement* node if the impaired node was using ONTAP features that require a standard (node-locked) license. For features with standard licenses, each node in the cluster should have its own key for the feature.

About this task

Until you install license keys, features requiring standard licenses continue to be available to the *replacement* node. However, if the impaired node was the only node in the cluster with a license for the feature, no configuration changes to the feature are allowed. Also, using unlicensed features on the node might put you out of compliance with your license agreement, so you should install the replacement license key or keys on the *replacement* node as soon as possible.

Before you begin

The licenses keys must be in the 28-character format.

You have a 90-day grace period in which to install the license keys. After the grace period, all old licenses are invalidated. After a valid license key is installed, you have 24 hours to install all of the keys before the grace period ends.

Steps

1. If you need new license keys, obtain replacement license keys on the NetApp Support Site in the My Support section under Software licenses.

   > The new license keys that you require are automatically generated and sent to the email address on file. If you fail to receive the email with the license keys within 30 days, you should contact technical support.

2. Install each license key: `system license add -license-code license-key, license-key...`
3. Remove the old licenses, if desired:
   a. Check for unused licenses: `license clean-up -unused -simulate`
   b. If the list looks correct, remove the unused licenses: `license clean-up -unused`

Step 2: Verify LIFs and registering the serial number

Before returning the *replacement* node to service, you should verify that the LIFs are on their home ports, and register the serial number of the *replacement* node if AutoSupport is enabled, and reset automatic giveback.

Steps

1. Verify that the logical interfaces are reporting to their home server and ports: `network interface show -is-home false`

   If any LIFs are listed as false, revert them to their home ports: `network interface revert -vserver * -lif *`

2. Register the system serial number with NetApp Support.
   - If AutoSupport is enabled, send an AutoSupport message to register the serial number.

- If AutoSupport is not enabled, call NetApp Support to register the serial number.

3. If an AutoSupport maintenance window was triggered, end it by using the `system node autosupport invoke -node * -type all -message MAINT=END` command.
4. If automatic giveback was disabled, reenable it: `storage failover modify -node local -auto -giveback true`

Step 3: Return the failed part to NetApp

Return the failed part to NetApp, as described in the RMA instructions shipped with the kit. See the Part Return & Replacements page for further information.

Copyright information

Copyright © 2024 NetApp, Inc. All Rights Reserved. Printed in the U.S. No part of this document covered by copyright may be reproduced in any form or by any means—graphic, electronic, or mechanical, including photocopying, recording, taping, or storage in an electronic retrieval system—without prior written permission of the copyright owner.

Software derived from copyrighted NetApp material is subject to the following license and disclaimer:

THIS SOFTWARE IS PROVIDED BY NETAPP “AS IS” AND WITHOUT ANY EXPRESS OR IMPLIED WARRANTIES, INCLUDING, BUT NOT LIMITED TO, THE IMPLIED WARRANTIES OF MERCHANTABILITY AND FITNESS FOR A PARTICULAR PURPOSE, WHICH ARE HEREBY DISCLAIMED. IN NO EVENT SHALL NETAPP BE LIABLE FOR ANY DIRECT, INDIRECT, INCIDENTAL, SPECIAL, EXEMPLARY, OR CONSEQUENTIAL DAMAGES (INCLUDING, BUT NOT LIMITED TO, PROCUREMENT OF SUBSTITUTE GOODS OR SERVICES; LOSS OF USE, DATA, OR PROFITS; OR BUSINESS INTERRUPTION) HOWEVER CAUSED AND ON ANY THEORY OF LIABILITY, WHETHER IN CONTRACT, STRICT LIABILITY, OR TORT (INCLUDING NEGLIGENCE OR OTHERWISE) ARISING IN ANY WAY OUT OF THE USE OF THIS SOFTWARE, EVEN IF ADVISED OF THE POSSIBILITY OF SUCH DAMAGE.

NetApp reserves the right to change any products described herein at any time, and without notice. NetApp assumes no responsibility or liability arising from the use of products described herein, except as expressly agreed to in writing by NetApp. The use or purchase of this product does not convey a license under any patent rights, trademark rights, or any other intellectual property rights of NetApp.

The product described in this manual may be protected by one or more U.S. patents, foreign patents, or pending applications.

LIMITED RIGHTS LEGEND: Use, duplication, or disclosure by the government is subject to restrictions as set forth in subparagraph (b)(3) of the Rights in Technical Data -Noncommercial Items at DFARS 252.227-7013 (FEB 2014) and FAR 52.227-19 (DEC 2007).

Data contained herein pertains to a commercial product and/or commercial service (as defined in FAR 2.101) and is proprietary to NetApp, Inc. All NetApp technical data and computer software provided under this Agreement is commercial in nature and developed solely at private expense. The U.S. Government has a non-exclusive, non-transferrable, nonsublicensable, worldwide, limited irrevocable license to use the Data only in connection with and in support of the U.S. Government contract under which the Data was delivered. Except as provided herein, the Data may not be used, disclosed, reproduced, modified, performed, or displayed without the prior written approval of NetApp, Inc. United States Government license rights for the Department of Defense are limited to those rights identified in DFARS clause 252.227-7015(b) (FEB 2014).

Trademark information

NETAPP, the NETAPP logo, and the marks listed at http://www.netapp.com/TM are trademarks of NetApp, Inc. Other company and product names may be trademarks of their respective owners.