Chassis

Install and maintain

NetApp
March 22, 2024

This PDF was generated from https://docs.netapp.com/us-en/ontap-systems/a300/chassis-replace-overview.html on March 22, 2024. Always check docs.netapp.com for the latest.

Table of Contents

Chassis . . . 1
Overview of chassis replacement - AFF A300 . . . 1
Shut down the controllers - - AFF A300 . . . 1
Replace hardware - AFF A300 . . . 4
Restore and verify the configuration - AFF A300 . . . 10

Chassis

Overview of chassis replacement - AFF A300

To replace the chassis, you must move the power supplies, fans, and controller modules from the impaired chassis to the new chassis, and swap out the impaired chassis from the equipment rack or system cabinet with the new chassis of the same model as the impaired chassis.

All other components in the system must be functioning properly; if not, you must contact technical support.

- You can use this procedure with all versions of ONTAP supported by your system.
- This procedure is written with the assumption that you are moving the controller module or modules to the new chassis, and that the chassis is a new component from NetApp.
- This procedure is disruptive. For a two-node cluster, you will have a complete service outage and a partial outage in a multi-node cluster.

Shut down the controllers - - AFF A300

To replace the chassis, you must shutdown the controllers.

Option 1: Shut down the controller

This procedure is for 2-node, non-MetroCluster configurations only. If you have a system with more than two nodes, see How to perform a graceful shutdown and power up of one HA pair in a 4-node cluster.

Before you begin

You need:

- Local administrator credentials for ONTAP.
- NetApp onboard key management (OKM) cluster-wide passphrase if using storage encryption.
- SP/BMC accessability for each controller.
- Stop all clients/host from accessing data on the NetApp system.
- Suspend external backup jobs.
- Necessary tools and equipment for the replacement.

> If the system is a NetApp StorageGRID or ONTAP S3 used as FabricPool cloud tier, refer to the Gracefully shutdown and power up your storage system Resolution Guide after performing this procedure.

> If using FlexArray array LUNs, follow the specific vendor storage array documentation for the shutdown procedure to perform for those systems after performing this procedure.

> If using SSDs, refer to SU490: (Impact: Critical) SSD Best Practices: Avoid risk of drive failure and data loss if powered off for more than two months

As a best practice before shutdown, you should:

- Perform additional system health checks.
- Upgrade ONTAP to a recommended release for the system.
- Resolve any Active IQ Wellness Alerts and Risks. Make note of any faults presently on the system, such as LEDs on the system components.

Steps

1. Log into the cluster through SSH or log in from any node in the cluster using a local console cable and a laptop/console.
2. Turn off AutoSupport and indicate how long you expect the system to be off line:

   ```
   system node autosupport invoke -node * -type all -message "MAINT=8h Power
   Maintenance"
   ```

3. Identify the SP/BMC address of all nodes:

   ```
   system service-processor show -node * -fields address
   ```

4. Exit the cluster shell: `exit`
5. Log into SP/BMC over SSH using the IP address of any of the nodes listed in the output from the previous step.

   If your're using a console/laptop, log into the controller using the same cluster administrator credentials.

   > Open an SSH session to every SP/BMC connection so that you can monitor progress.

6. Halt all nodes in the cluster:

   ```
   system node halt -node * -skip-lif-migration-before-shutdown true -ignore
   -quorum-warnings true -inhibit-takeover true.
   ```

   > For clusters using SnapMirror synchronous operating in StrictSync mode: `system node halt -node * -skip-lif-migration-before-shutdown true -ignore-quorum -warnings true -inhibit-takeover true -ignore-strict-sync-warnings true`

7. Enter **y** for each controller in the cluster when you see *`Warning: Are you sure you want to halt node "cluster name-controller number"? {y|n}:`*
8. Wait for each controller to halt and display the LOADER prompt.
9. Turn off each PSU or unplug them if there is no PSU on/off switch.
10. Unplug the power cord from each PSU.
11. Verify that all controllers in the impaired chassis are powered down.

Option 2: Controllers are in a two-node MetroCluster configuration

To shut down the impaired controller, you must determine the status of the controller and, if necessary, switch over the controller so that the healthy controller continues to serve data from the impaired controller storage.

About this task

- If you are using NetApp Storage Encryption, you must have reset the MSID using the instructions in the "Return a FIPS drive or SED to unprotected mode" section of NetApp Encryption overview with the CLI.
- You must leave the power supplies turned on at the end of this procedure to provide power to the healthy controller.

Steps

1. Check the MetroCluster status to determine whether the impaired controller has automatically switched over to the healthy controller: `metrocluster show`
2. Depending on whether an automatic switchover has occurred, proceed according to the following table:

If the impaired controller…	Then…
Has automatically switched over	Proceed to the next step.
Has not automatically switched over	Perform a planned switchover operation from the healthy controller: `metrocluster switchover`
Has not automatically switched over, you attempted switchover with the `metrocluster switchover` command, and the switchover was vetoed	Review the veto messages and, if possible, resolve the issue and try again. If you are unable to resolve the issue, contact technical support.

3. Resynchronize the data aggregates by running the `metrocluster heal -phase aggregates` command from the surviving cluster.

```
controller_A_1::> metrocluster heal -phase aggregates
[Job 130] Job succeeded: Heal Aggregates is successful.
```

If the healing is vetoed, you have the option of reissuing the `metrocluster heal` command with the `-override-vetoes` parameter. If you use this optional parameter, the system overrides any soft vetoes that prevent the healing operation.

4. Verify that the operation has been completed by using the metrocluster operation show command.

```
controller_A_1::> metrocluster operation show
    Operation: heal-aggregates
      State: successful
Start Time: 7/25/2016 18:45:55
   End Time: 7/25/2016 18:45:56
     Errors: -
```

5. Check the state of the aggregates by using the `storage aggregate show` command.

```
controller_A_1::> storage aggregate show
Aggregate     Size Available Used% State   #Vols  Nodes            RAID
Status
--------- -------- --------- ----- ------- ------ ----------------
------------
...
aggr_b2    227.1GB   227.1GB    0% online       0 mcc1-a2
raid_dp, mirrored, normal...
```

6. Heal the root aggregates by using the `metrocluster heal -phase root-aggregates` command.

```
mcc1A::> metrocluster heal -phase root-aggregates
[Job 137] Job succeeded: Heal Root Aggregates is successful
```

If the healing is vetoed, you have the option of reissuing the `metrocluster heal` command with the -override-vetoes parameter. If you use this optional parameter, the system overrides any soft vetoes that prevent the healing operation.

7. Verify that the heal operation is complete by using the `metrocluster operation show` command on the destination cluster:

```
mcc1A::> metrocluster operation show
  Operation: heal-root-aggregates
      State: successful
 Start Time: 7/29/2016 20:54:41
   End Time: 7/29/2016 20:54:42
     Errors: -
```

8. On the impaired controller module, disconnect the power supplies.

Replace hardware - AFF A300

Move the power supplies, fans, and controller modules from the impaired chassis to the new chassis, and swap out the impaired chassis from the equipment rack or system cabinet with the new chassis of the same model as the impaired chassis.

Step 1: Move a power supply

Moving out a power supply when replacing a chassis involves turning off, disconnecting, and removing the power supply from the old chassis and installing and connecting it on the replacement chassis.

1. If you are not already grounded, properly ground yourself.
2. Turn off the power supply and disconnect the power cables:
   a. Turn off the power switch on the power supply.

b. Open the power cable retainer, and then unplug the power cable from the power supply.

c. Unplug the power cable from the power source.

3. Press down the release latch on the power supply cam handle, and then lower the cam handle to the fully open position to release the power supply from the mid plane.

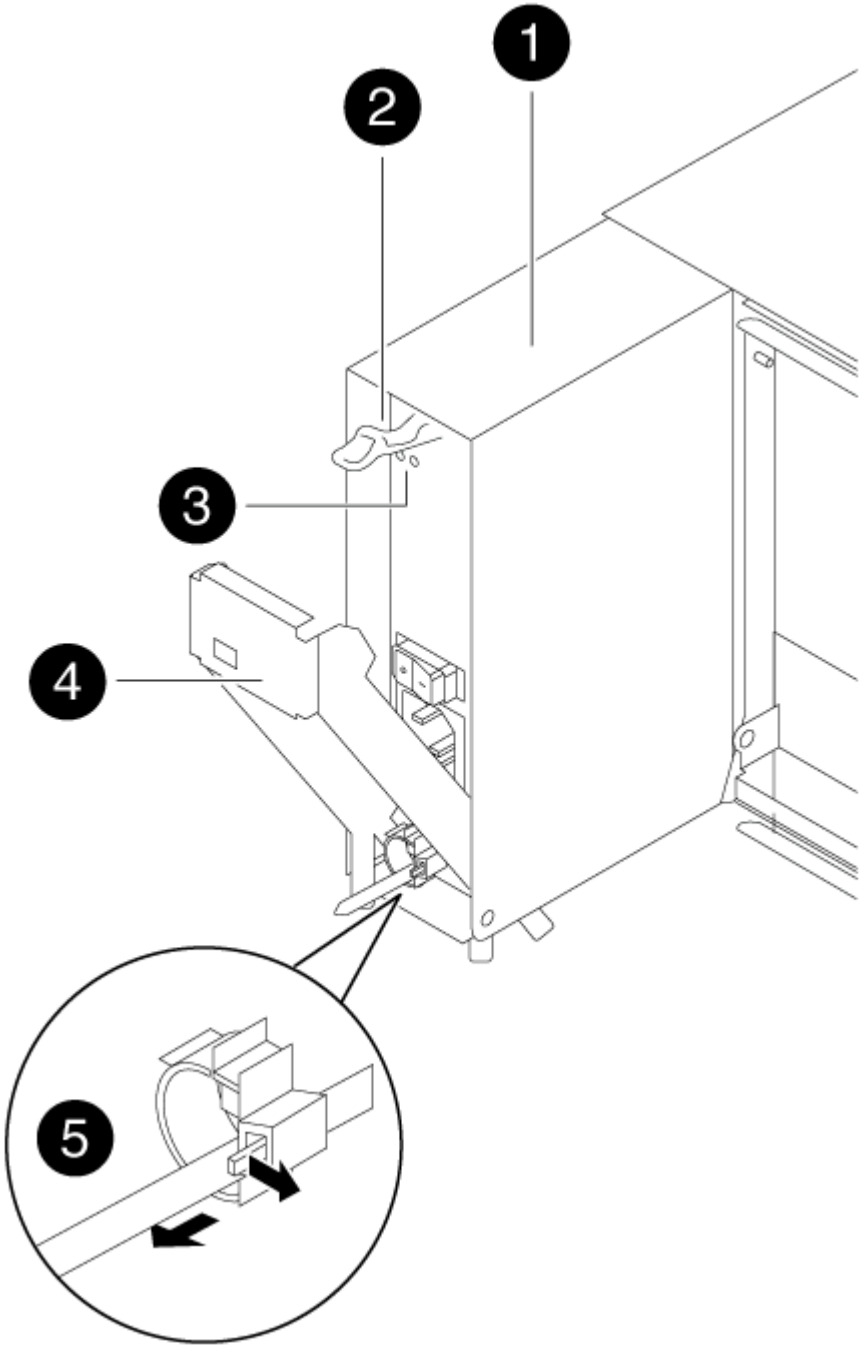

1	Power supply
2	Cam handle release latch

3	Power and Fault LEDs
4	Cam handle
5	Power cable locking mechanism

4. Use the cam handle to slide the power supply out of the system.

   When removing a power supply, always use two hands to support its weight.

5. Repeat the preceding steps for any remaining power supplies.
6. Using both hands, support and align the edges of the power supply with the opening in the system chassis, and then gently push the power supply into the chassis using the cam handle.

   The power supplies are keyed and can only be installed one way.

   Do not use excessive force when sliding the power supply into the system. You can damage the connector.

7. Push firmly on the power supply cam handle to seat it all the way into the chassis, and then push the cam handle to the closed position, making sure that the cam handle release latch clicks into its locked position.
8. Reconnect the power cable and secure it to the power supply using the power cable locking mechanism.

   Only connect the power cable to the power supply. Do not connect the power cable to a power source at this time.

Step 2: Move a fan

Moving out a fan module when replacing the chassis involves a specific sequence of tasks.

1. Remove the bezel (if necessary) with two hands, by grasping the openings on each side of the bezel, and then pulling it toward you until the bezel releases from the ball studs on the chassis frame.
2. Press down the release latch on the fan module cam handle, and then pull the cam handle downward.

   The fan module moves a little bit away from the chassis.

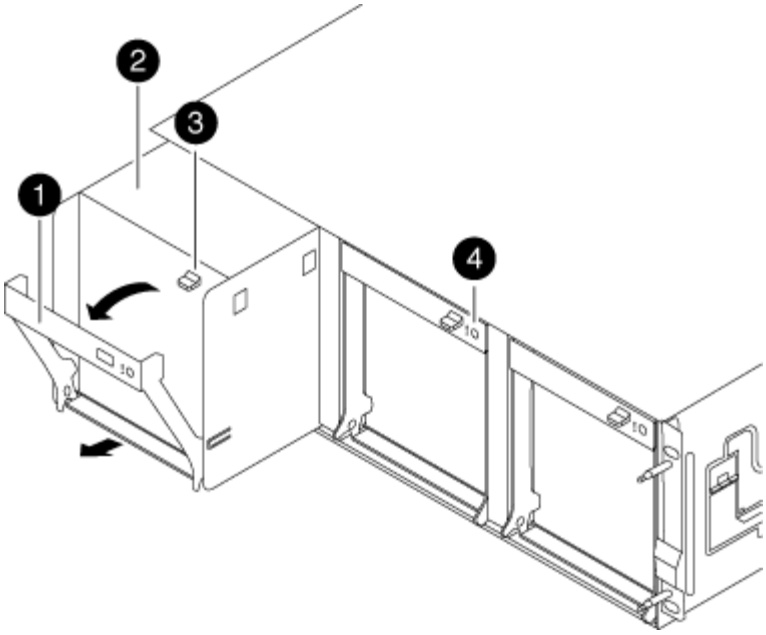

1	Cam handle
2	Fan module
3	Cam handle release latch
4	Fan module Attention LED

3. Pull the fan module straight out from the chassis, making sure that you support it with your free hand so that it does not swing out of the chassis.

   The fan modules are short. Always support the bottom of the fan module with your free hand so that it does not suddenly drop free from the chassis and injure you.

4. Set the fan module aside.
5. Repeat the preceding steps for any remaining fan modules.
6. Insert the fan module into the replacement chassis by aligning it with the opening, and then sliding it into the chassis.
7. Push firmly on the fan module cam handle so that it is seated all the way into the chassis.

   The cam handle raises slightly when the fan module is completely seated.

8. Swing the cam handle up to its closed position, making sure that the cam handle release latch clicks into the locked position.

   The fan LED should be green after the fan is seated and has spun up to operational speed.

9. Repeat these steps for the remaining fan modules.

10. Align the bezel with the ball studs, and then gently push the bezel onto the ball studs.

Step 3: Remove the controller module

To replace the chassis, you must remove the controller module or modules from the old chassis.

1. If you are not already grounded, properly ground yourself.
2. Loosen the hook and loop strap binding the cables to the cable management device, and then unplug the system cables and SFPs (if needed) from the controller module, keeping track of where the cables were connected.

   Leave the cables in the cable management device so that when you reinstall the cable management device, the cables are organized.

3. Remove and set aside the cable management devices from the left and right sides of the controller module.

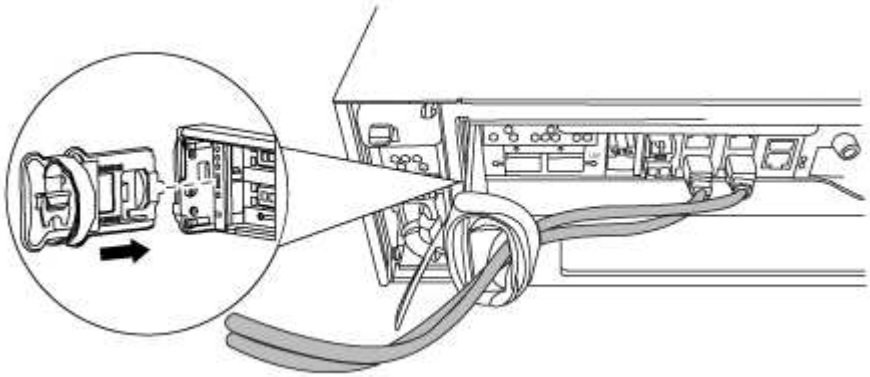

4. Loosen the thumbscrew on the cam handle on the controller module.

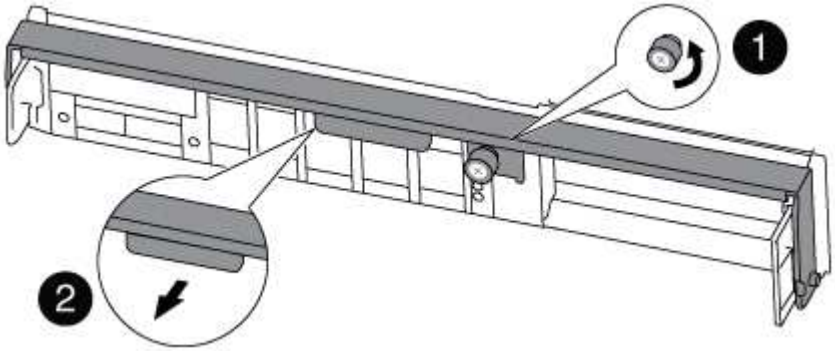

1	Thumbscrew
2	Cam handle

5. Pull the cam handle downward and begin to slide the controller module out of the chassis.

   Make sure that you support the bottom of the controller module as you slide it out of the chassis.

6. Set the controller module aside in a safe place, and repeat these steps if you have another controller module in the chassis.

Step 4: Replace a chassis from within the equipment rack or system cabinet

You must remove the existing chassis from the equipment rack or system cabinet before you can install the replacement chassis.

1. Remove the screws from the chassis mount points.

   If the system is in a system cabinet, you might need to remove the rear tie-down bracket.

2. With the help of two or three people, slide the old chassis off the rack rails in a system cabinet or *L* brackets in an equipment rack, and then set it aside.
3. If you are not already grounded, properly ground yourself.
4. Using two or three people, install the replacement chassis into the equipment rack or system cabinet by guiding the chassis onto the rack rails in a system cabinet or *L* brackets in an equipment rack.
5. Slide the chassis all the way into the equipment rack or system cabinet.
6. Secure the front of the chassis to the equipment rack or system cabinet, using the screws you removed from the old chassis.
7. If you have not already done so, install the bezel.

Step 5: Install the controller

After you install the controller module and any other components into the new chassis, you must boot your system.

For HA pairs with two controller modules in the same chassis, the sequence in which you install the controller module is especially important because it attempts to reboot as soon as you completely seat it in the chassis.

1. If you are not already grounded, properly ground yourself.
2. Align the end of the controller module with the opening in the chassis, and then gently push the controller module halfway into the system.

   Do not completely insert the controller module in the chassis until instructed to do so.

3. Recable the console to the controller module, and then reconnect the management port.
4. Repeat the preceding steps if there is a second controller to install in the new chassis.
5. Complete the installation of the controller module:

If your system is in…	Then perform these steps…
An HA pair	a. With the cam handle in the open position, firmly push the controller module in until it meets the midplane and is fully seated, and then close the cam handle to the locked position. Tighten the thumbscrew on the cam handle on back of the controller module. Do not use excessive force when sliding the controller module into the chassis to avoid damaging the connectors. b. If you have not already done so, reinstall the cable management device. c. Bind the cables to the cable management device with the hook and loop strap. d. Repeat the preceding steps for the second controller module in the new chassis.
A stand-alone configuration	a. With the cam handle in the open position, firmly push the controller module in until it meets the midplane and is fully seated, and then close the cam handle to the locked position. Tighten the thumbscrew on the cam handle on back of the controller module. Do not use excessive force when sliding the controller module into the chassis to avoid damaging the connectors. b. If you have not already done so, reinstall the cable management device. c. Bind the cables to the cable management device with the hook and loop strap. d. Reinstall the blanking panel and then go to the next step.

6. Connect the power supplies to different power sources, and then turn them on.
7. Boot each controller to Maintenance mode:
   a. As each controller starts the booting, press `Ctrl-C` to interrupt the boot process when you see the message `Press Ctrl-C for Boot Menu`.

      If you miss the prompt and the controller modules boot to ONTAP, enter `halt`, and then at the LOADER prompt enter `boot_ontap`, press `Ctrl-C` when prompted, and then repeat this step.

   b. From the boot menu, select the option for Maintenance mode.

Restore and verify the configuration - AFF A300

You must verify the HA state of the chassis, switch back aggregates, and return the failed

part to NetApp, as described in the RMA instructions shipped with the kit.

Step 1: Verify and set the HA state of the chassis

You must verify the HA state of the chassis, and, if necessary, update the state to match your system configuration.

1. In Maintenance mode, from either controller module, display the HA state of the local controller module and chassis: `ha-config show`

   The HA state should be the same for all components.

2. If the displayed system state for the chassis does not match your system configuration:
   a. Set the HA state for the chassis: `ha-config modify chassis` *`HA-state`*

      The value for HA-state can be one of the following:

      - `ha`
      - `mcc`
      - `mcc-2n`
      - `mccip`
      - `non-ha`

   b. Confirm that the setting has changed: `ha-config show`
3. If you have not already done so, recable the rest of your system.
4. The next step depends on your system configuration.

If your system is in…	Then…
A stand-alone configuration	a. Exit Maintenance mode: `halt` b. Go to Step 3: Return the failed part to NetApp.
An HA pair with a second controller module	Exit Maintenance mode: `halt` The LOADER prompt appears.

Step 2: Switch back aggregates in a two-node MetroCluster configuration

After you have completed the FRU replacement in a two-node MetroCluster configuration, you can perform the MetroCluster switchback operation. This returns the configuration to its normal operating state, with the sync-source storage virtual machines (SVMs) on the formerly impaired site now active and serving data from the local disk pools.

This task only applies to two-node MetroCluster configurations.

Steps

1. Verify that all nodes are in the `enabled` state: `metrocluster node show`

```
cluster_B::>  metrocluster node show

DR                           Configuration  DR
Group Cluster Node           State          Mirroring Mode
----- ------- -------------- -------------- ---------
--------------------
1     cluster_A
              controller_A_1 configured     enabled   heal roots
completed
      cluster_B
              controller_B_1 configured     enabled   waiting for
switchback recovery
2 entries were displayed.
```

2. Verify that resynchronization is complete on all SVMs: `metrocluster vserver show`
3. Verify that any automatic LIF migrations being performed by the healing operations were completed successfully: `metrocluster check lif show`
4. Perform the switchback by using the `metrocluster switchback` command from any node in the surviving cluster.
5. Verify that the switchback operation has completed: `metrocluster show`

   The switchback operation is still running when a cluster is in the `waiting-for-switchback` state:

```
cluster_B::> metrocluster show
Cluster              Configuration State    Mode
--------------------    -------------------     ---------
 Local: cluster_B configured        switchover
Remote: cluster_A configured        waiting-for-switchback
```

   The switchback operation is complete when the clusters are in the `normal` state.:

```
cluster_B::> metrocluster show
Cluster              Configuration State    Mode
--------------------    -------------------     ---------
 Local: cluster_B configured            normal
Remote: cluster_A configured            normal
```

   If a switchback is taking a long time to finish, you can check on the status of in-progress baselines by using the `metrocluster config-replication resync-status show` command.

6. Reestablish any SnapMirror or SnapVault configurations.

Step 3: Return the failed part to NetApp

Return the failed part to NetApp, as described in the RMA instructions shipped with the kit. See the Part Return & Replacements page for further information.

Copyright information

Copyright © 2024 NetApp, Inc. All Rights Reserved. Printed in the U.S. No part of this document covered by copyright may be reproduced in any form or by any means—graphic, electronic, or mechanical, including photocopying, recording, taping, or storage in an electronic retrieval system—without prior written permission of the copyright owner.

Software derived from copyrighted NetApp material is subject to the following license and disclaimer:

THIS SOFTWARE IS PROVIDED BY NETAPP “AS IS” AND WITHOUT ANY EXPRESS OR IMPLIED WARRANTIES, INCLUDING, BUT NOT LIMITED TO, THE IMPLIED WARRANTIES OF MERCHANTABILITY AND FITNESS FOR A PARTICULAR PURPOSE, WHICH ARE HEREBY DISCLAIMED. IN NO EVENT SHALL NETAPP BE LIABLE FOR ANY DIRECT, INDIRECT, INCIDENTAL, SPECIAL, EXEMPLARY, OR CONSEQUENTIAL DAMAGES (INCLUDING, BUT NOT LIMITED TO, PROCUREMENT OF SUBSTITUTE GOODS OR SERVICES; LOSS OF USE, DATA, OR PROFITS; OR BUSINESS INTERRUPTION) HOWEVER CAUSED AND ON ANY THEORY OF LIABILITY, WHETHER IN CONTRACT, STRICT LIABILITY, OR TORT (INCLUDING NEGLIGENCE OR OTHERWISE) ARISING IN ANY WAY OUT OF THE USE OF THIS SOFTWARE, EVEN IF ADVISED OF THE POSSIBILITY OF SUCH DAMAGE.

NetApp reserves the right to change any products described herein at any time, and without notice. NetApp assumes no responsibility or liability arising from the use of products described herein, except as expressly agreed to in writing by NetApp. The use or purchase of this product does not convey a license under any patent rights, trademark rights, or any other intellectual property rights of NetApp.

The product described in this manual may be protected by one or more U.S. patents, foreign patents, or pending applications.

LIMITED RIGHTS LEGEND: Use, duplication, or disclosure by the government is subject to restrictions as set forth in subparagraph (b)(3) of the Rights in Technical Data -Noncommercial Items at DFARS 252.227-7013 (FEB 2014) and FAR 52.227-19 (DEC 2007).

Data contained herein pertains to a commercial product and/or commercial service (as defined in FAR 2.101) and is proprietary to NetApp, Inc. All NetApp technical data and computer software provided under this Agreement is commercial in nature and developed solely at private expense. The U.S. Government has a non-exclusive, non-transferrable, nonsublicensable, worldwide, limited irrevocable license to use the Data only in connection with and in support of the U.S. Government contract under which the Data was delivered. Except as provided herein, the Data may not be used, disclosed, reproduced, modified, performed, or displayed without the prior written approval of NetApp, Inc. United States Government license rights for the Department of Defense are limited to those rights identified in DFARS clause 252.227-7015(b) (FEB 2014).

Trademark information

NETAPP, the NETAPP logo, and the marks listed at http://www.netapp.com/TM are trademarks of NetApp, Inc. Other company and product names may be trademarks of their respective owners.