Controller module

Install and maintain

NetApp
March 22, 2024

This PDF was generated from https://docs.netapp.com/us-en/ontap-systems/a320/controller-replace-overview.html on March 22, 2024. Always check docs.netapp.com for the latest.

Table of Contents

Controller module . . . 1
Overview of controller module replacement - AFF A320 . . . 1
Shut down the impaired controller - AFF A320 . . . 1
Replace the controller module hardware - AFF A320 . . . 2
Restore and verify the system configuration - AFF A320 . . . 10
Recable the system and reassign disks - AFF A320 . . . 12
Complete system restoration - AFF A320 . . . 14

Controller module

Overview of controller module replacement - AFF A320

You must review the prerequisites for the replacement procedure and select the correct one for your version of the ONTAP operating system.

- All drive shelves must be working properly.
- The healthy controller must be able to take over the controller that is being replaced (referred to in this procedure as the “impaired controller”).
- If your system is in a MetroCluster configuration, you must review the section Choosing the correct recovery procedure to determine whether you should use this procedure.

  If this is the procedure you should use, note that the controller replacement procedure for a controller in a four or eight node MetroCluster configuration is the same as that in an HA pair. No MetroCluster-specific steps are required because the failure is restricted to an HA pair and storage failover commands can be used to provide nondisruptive operation during the replacement.

- You must replace the failed component with a replacement FRU component you received from your provider.
- You must be replacing a controller module with a controller module of the same model type. You cannot upgrade your system by just replacing the controller module.
- You cannot change any drives or drive shelves as part of this procedure.
- In this procedure, the boot device is moved from the impaired controller to the *replacement* controller so that the *replacement* controller will boot up in the same version of ONTAP as the old controller module.
- It is important that you apply the commands in these steps on the correct systems:
  - The *impaired* controller is the controller that is being replaced.
  - The *replacement* controller is the new controller that is replacing the impaired controller.
  - The *healthy* controller is the surviving controller.
- You must always capture the controller’s console output to a text file.

  This provides you a record of the procedure so that you can troubleshoot any issues that you might encounter during the replacement process.

Shut down the impaired controller - AFF A320

To shut down the impaired controller, you must determine the status of the controller and, if necessary, take over the controller so that the healthy controller continues to serve data from the impaired controller storage.

About this task

- If you are using NetApp Storage Encryption, you must have reset the MSID using the instructions in the Returning SEDs to unprotected mode.
- If you have a SAN system, you must have checked event messages (`cluster kernel-service show`) for impaired controller SCSI blade. The `cluster kernel-service show` command displays the node name, quorum status of that node, availability status of that node, and operational status of that node.

Each SCSI-blade process should be in quorum with the other nodes in the cluster. Any issues must be resolved before you proceed with the replacement.

- If you have a cluster with more than two nodes, it must be in quorum. If the cluster is not in quorum or a healthy controller shows false for eligibility and health, you must correct the issue before shutting down the impaired controller; see Synchronize a node with the cluster.

Steps

1. If AutoSupport is enabled, suppress automatic case creation by invoking an AutoSupport message: `system node autosupport invoke -node * -type all -message MAINT=number_of_hours_downh`

   The following AutoSupport message suppresses automatic case creation for two hours: `cluster1:> system node autosupport invoke -node * -type all -message MAINT=2h`

2. Disable automatic giveback from the console of the healthy controller: `storage failover modify –node local -auto-giveback false`

   When you see *Do you want to disable auto-giveback?*, enter `y`.

3. Take the impaired controller to the LOADER prompt:

If the impaired controller is displaying…	Then…
The LOADER prompt	Go to the next step.
Waiting for giveback…	Press Ctrl-C, and then respond `y` when prompted.
System prompt or password prompt	Take over or halt the impaired controller from the healthy controller: `storage failover takeover -ofnode` *`impaired_node_name`* When the impaired controller shows Waiting for giveback…, press Ctrl-C, and then respond `y`.

Replace the controller module hardware - AFF A320

To replace the controller module hardware, you must remove the impaired controller, move FRU components to the replacement controller module, install the replacement controller module in the chassis, and then boot the system to Maintenance mode.

Step 1: Remove the controller module

To access components inside the controller module, you must remove the controller module from the chassis.

You can use the following images or the written steps to remove the controller module from the chassis.

The following image shows removing the cables and cable management arms from the impaired controller

module:

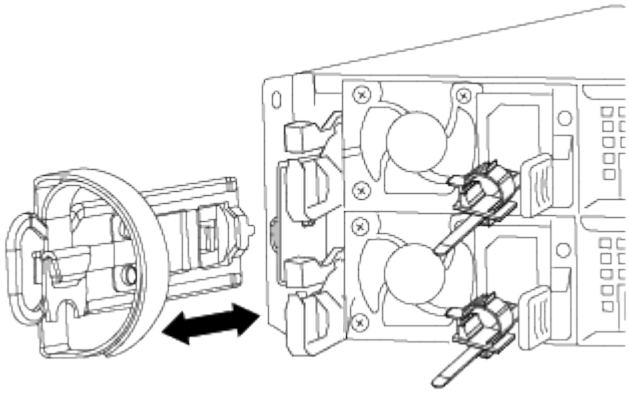

The following image shows removing the impaired controller module from the chassis:

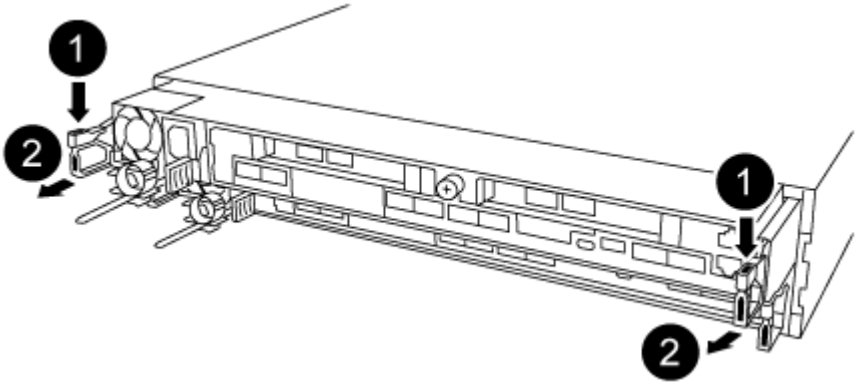

1. If you are not already grounded, properly ground yourself.
2. Unplug the controller module power supply from the power source.
3. Loosen the hook and loop strap binding the cables to the cable management device, and then unplug the system cables and SFPs (if needed) from the controller module, keeping track of where the cables were connected.

   Leave the cables in the cable management device so that when you reinstall the cable management device, the cables are organized.

4. Remove and set aside the cable management devices from the left and right sides of the controller module.
5. Remove the controller module from the chassis:
   a. Insert your forefinger into the latching mechanism on either side of the controller module.
   b. Press down on the orange tab on top of the latching mechanism until it clears the latching pin on the chassis.

      The latching mechanism hook should be nearly vertical and should be clear of the chassis pin.

   c. Gently pull the controller module a few inches toward you so that you can grasp the controller module sides.
   d. Using both hands, gently pull the controller module out of the chassis and set it on a flat, stable surface.

Step 2: Move the power supplies

You must move the power supply from the impaired controller module to the replacement controller module when you replace a controller module.

1. Rotate the cam handle such that it can be used to pull power supply out of the controller module while pressing the blue locking tab.

   > The power supply is short. Always use two hands to support it when removing it from the controller module so that it does not suddenly swing free from the controller module and injure you.

2. Move the power supply to the new controller module, and then install it.
3. Using both hands, support and align the edges of the power supply with the opening in the controller module, and then gently push the power supply into the controller module until the locking tab clicks into place.

   The power supplies will only properly engage with the internal connector and lock in place one way.

   > To avoid damaging the internal connector, do not use excessive force when sliding the power supply into the system.

Step 3: Move the NVDIMM battery

To move the NVDIMM battery from the impaired controller module to the replacement controller module, you must perform a specific sequence of steps.

You can use the following illustration or the written steps to move the NVDIMM battery from the impaired controller module to the replacement controller module.

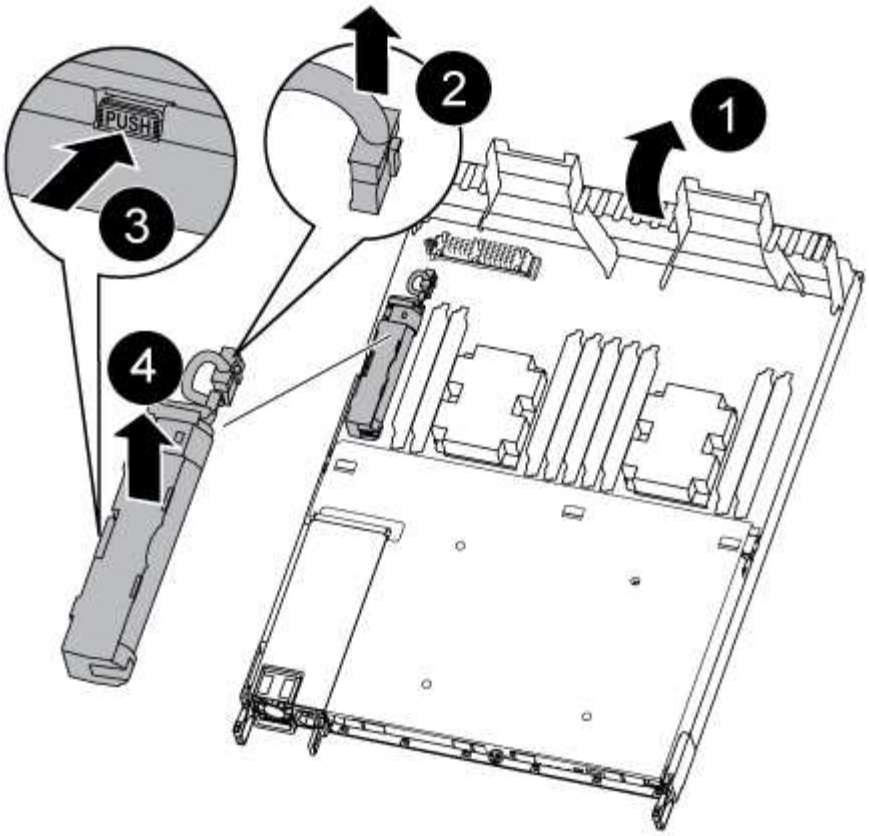

1. Locate the NVDIMM battery in the controller module.
2. Locate the battery plug and squeeze the clip on the face of the battery plug to release the plug from the socket, and then unplug the battery cable from the socket.
3. Grasp the battery and press the blue locking tab marked PUSH, and then lift the battery out of the holder and controller module.
4. Move the battery to the replacement controller module.
5. Align the battery module with the opening for the battery, and then gently push the battery into slot until it locks into place.

> Do not plug the battery cable back into the motherboard until instructed to do so.

Step 4: Move the boot media

You must locate the boot media, and then follow the directions to remove it from the impaired controller module and insert it into the replacement controller module.

You can use the following illustration or the written steps to move the boot media from the impaired controller module to the replacement controller module.

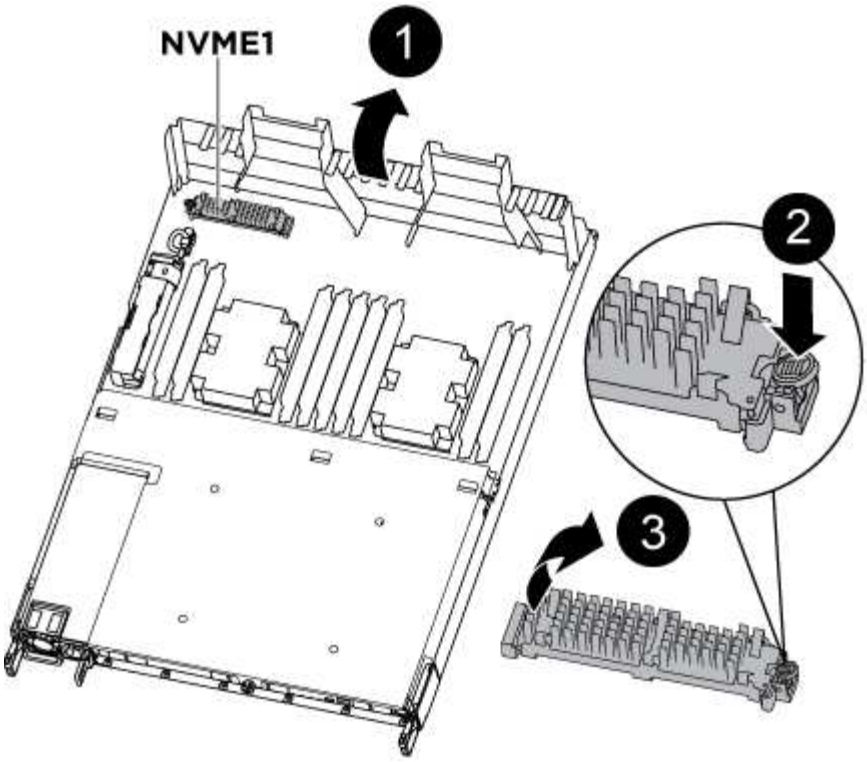

1. Open the air duct and locate the boot media using the following illustration or the FRU map on the controller module:
2. Locate and remove the boot media from the controller module:
   a. Press the blue button at the end of the boot media until the lip on the boot media clears the blue button.
   b. Rotate the boot media up and gently pull the boot media out of the socket.
3. Move the boot media to the new controller module, align the edges of the boot media with the socket housing, and then gently push it into the socket.
4. Check the boot media to make sure that it is seated squarely and completely in the socket.

   If necessary, remove the boot media and reseat it into the socket.

5. Lock the boot media in place:
   a. Rotate the boot media down toward the motherboard.
   b. Placing a finger at the end of the boot media by the blue button, push down on the boot media end to engage the blue locking button.
   c. While pushing down on the boot media, lift the blue locking button to lock the boot media in place.

Step 5: Move the DIMMs

You need to locate the DIMMs, and then move them from the impaired controller module to the replacement controller module.

You must have the new controller module ready so that you can move the DIMMs directly from the impaired controller module to the corresponding slots in the replacement controller module.

You can use the following illustrations or the written steps to move the DIMMs from the impaired controller module to the replacement controller module.

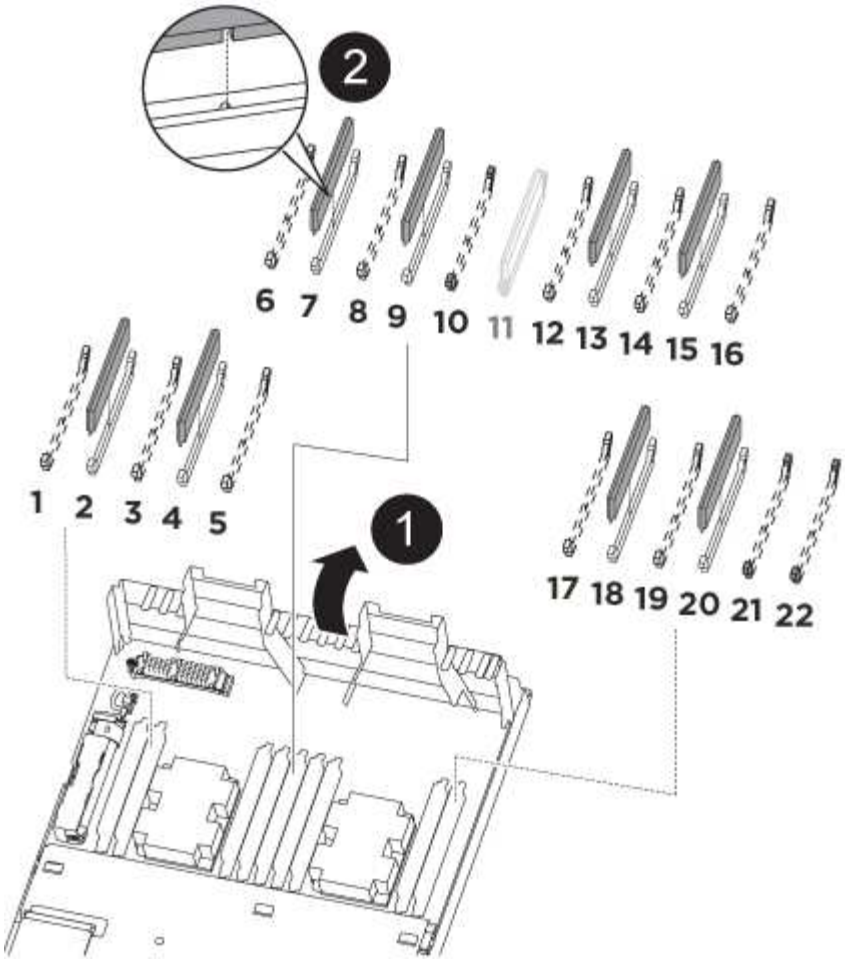

1. Locate the DIMMs on your controller module.

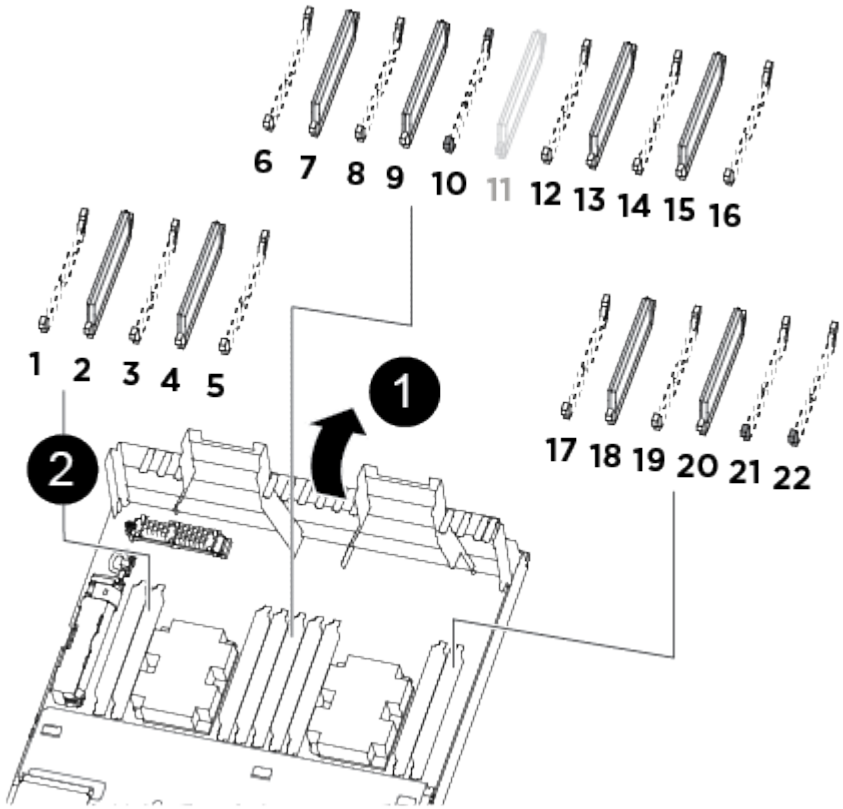

1	Air duct
2	• System DIMMs slots: 2,4, 7, 9, 13, 15, 18, and 20 • NVDIMM slot: 11 ⓘ The NVDIMM looks significantly different than system DIMMs.

2. Note the orientation of the DIMM in the socket so that you can insert the DIMM in the replacement controller module in the proper orientation.
3. Verify that the NVDIMM battery is not plugged into the new controller module.
4. Move the DIMMs from the impaired controller module to the replacement controller module:

   ⓘ Make sure that you install the each DIMM into the same slot it occupied in the impaired controller module.

   a. Eject the DIMM from its slot by slowly pushing apart the DIMM ejector tabs on either side of the DIMM, and then slide the DIMM out of the slot.

      ⓘ Carefully hold the DIMM by the edges to avoid pressure on the components on the DIMM circuit board.

   b. Locate the corresponding DIMM slot on the replacement controller module.
   c. Make sure that the DIMM ejector tabs on the DIMM socket are in the open position, and then insert the DIMM squarely into the socket.

      The DIMMs fit tightly in the socket, but should go in easily. If not, realign the DIMM with the socket and reinsert it.

   d. Visually inspect the DIMM to verify that it is evenly aligned and fully inserted into the socket.
   e. Repeat these substeps for the remaining DIMMs.
5. Plug the NVDIMM battery into the motherboard.

   Make sure that the plug locks down onto the controller module.

Step 6: Move the PCIe risers

You must move the PCIe risers, with the PCIe cards installed in them, from the impaired controller module to the replacement controller module.

You can use the following illustration or the written steps to move the PCIe risers from the impaired controller module to the replacement controller module.

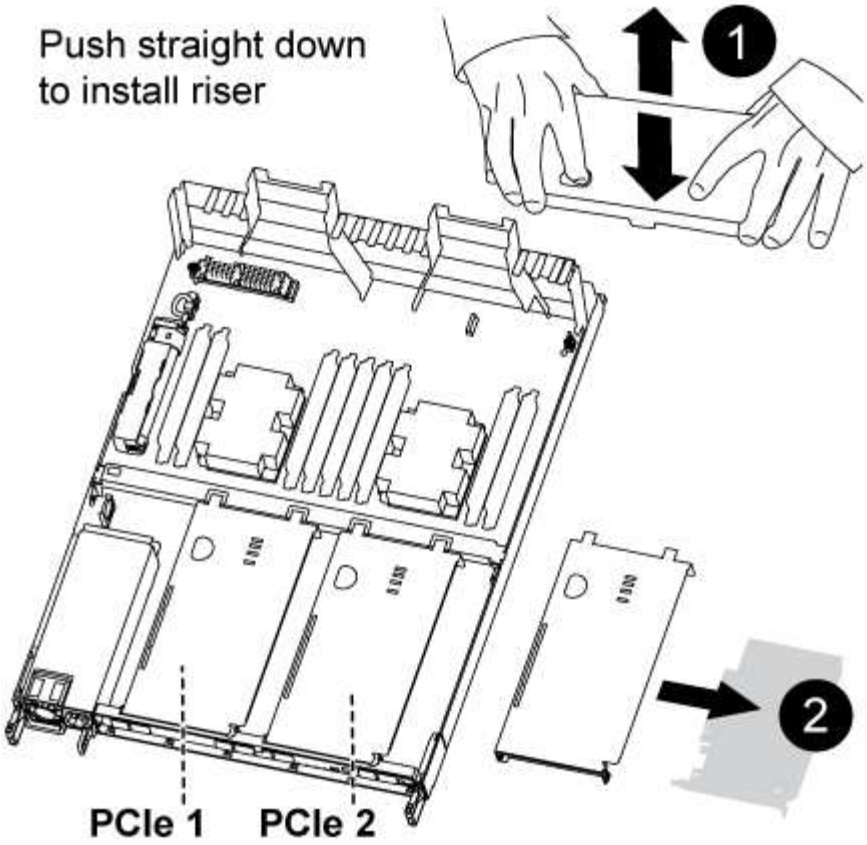

1. Remove the cover over the PCIe risers by unscrewing the blue thumbscrew on the cover, slide the cover toward you, rotate the cover upward, lift it off the controller module, and then set it aside.
2. Remove the empty risers from the replacement controller module.
   a. Place your forefinger into the hole on the left side of the riser module and grasp the riser with your thumb.
   b. Lift the riser straight up and out of the bay, and then set it aside.
   c. Repeat these substeps for the second riser.
3. Move the PCIe risers from the impaired controller module to the same riser bays on the replacement controller module:
   a. Remove a riser from the impaired controller module and move it to the replacement controller module.
   b. Lower the riser straight into the bay, so that it is square with the bay and the pins of the riser slide into the guide holes at the rear of the bay.
   c. Seat the riser into the motherboard socket straight down into the socket by applying even downward pressure along the edges of the riser until it seats.

      The riser should seat smoothly with little resistence. Reseat the riser in the bay if you encounter significant resistance seating the riser into the socket.

   d. Repeat these substeps for the second riser.
   e. Reinstall the cover over the PCIe risers.

Step 7: Install the controller module

After all of the components have been moved from the impaired controller module to the replacement controller

module, you must install the replacement controller module into the chassis, and then boot it to Maintenance mode.

You can use the following illustration or the written steps to install the replacement controller module in the chassis.

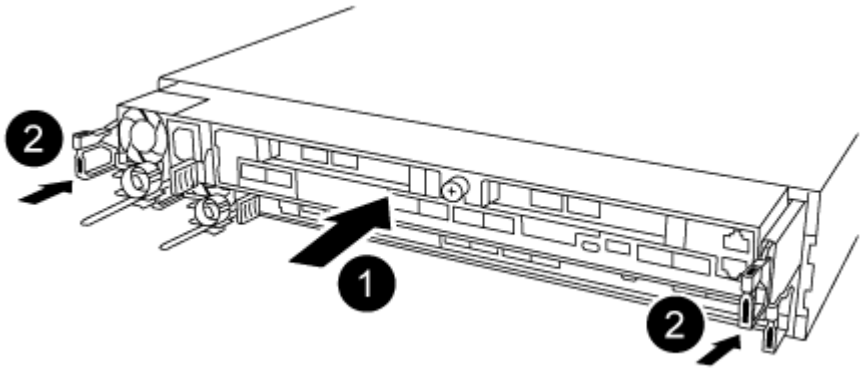

1. If you have not already done so, close the air duct at the rear of the controller module and reinstall the cover over the PCIe cards.
2. Align the end of the controller module with the opening in the chassis, and then gently push the controller module halfway into the system.

   Do not completely insert the controller module in the chassis until instructed to do so.

3. Cable the management and console ports only, so that you can access the system to perform the tasks in the following sections.

   You will connect the rest of the cables to the controller module later in this procedure.

4. Complete the reinstallation of the controller module:
   a. Make sure the latch arms are locked in the extended position.
   b. Using the latch arms, push the controller module into the chassis bay until it stops.
   c. Press down and hold the orange tabs on top of the latching mechanism.
   d. Gently push the controller module into the chassis bay until it is flush with the edges of the chassis.

      The latching mechanism arms slide into the chassis.

      The controller module begins to boot as soon as it is fully seated in the chassis.

   e. Release the latches to lock the controller module into place.
   f. Recable the power supply.
   g. If you have not already done so, reinstall the cable management device.
   h. Interrupt the normal boot process by pressing `Ctrl-C`.

Restore and verify the system configuration - AFF A320

After completing the hardware replacement and booting to Maintenance mode, you verify

the low-level system configuration of the replacement controller and reconfigure system settings as necessary.

Step 1: Set and verify the system time after replacing the controller module

You should check the time and date on the replacement controller module against the healthy controller module in an HA pair, or against a reliable time server in a stand-alone configuration. If the time and date do not match, you must reset them on the replacement controller module to prevent possible outages on clients due to time differences.

About this task

It is important that you apply the commands in the steps on the correct systems:

- The *replacement* node is the new node that replaced the impaired node as part of this procedure.
- The *healthy* node is the HA partner of the *replacement* node.

Steps

1. If the *replacement* node is not at the LOADER prompt, halt the system to the LOADER prompt.
2. On the *healthy* node, check the system time: `cluster date show`

   The date and time are based on the configured timezone.

3. At the LOADER prompt, check the date and time on the *replacement* node: `show date`

   The date and time are given in GMT.

4. If necessary, set the date in GMT on the replacement node: `set date` *`mm/dd/yyyy`*
5. If necessary, set the time in GMT on the replacement node: `set time` *`hh:mm:ss`*
6. At the LOADER prompt, confirm the date and time on the *replacement* node: `show date`

   The date and time are given in GMT.

Step 2: Verify and set the HA state of the controller module

You must verify the `HA` state of the controller module and, if necessary, update the state to match your system configuration.

1. In Maintenance mode from the new controller module, verify that all components display the same `HA` state: `ha-config show`

   The HA state should be the same for all components.

2. If the displayed system state of the controller module does not match your system configuration, set the `HA` state for the controller module: `ha-config modify controller ha-state`

   The value for HA-state can be one of the following:

   - `ha`
   - `mcc`

- `mccip`
- `non-ha`

3. If the displayed system state of the controller module does not match your system configuration, set the `HA` state for the controller module: `ha-config modify controller ha-state`
4. Confirm that the setting has changed: `ha-config show`

Recable the system and reassign disks - AFF A320

Continue the replacement procedure by recabling the storage and confirming disk reassignment.

Step 1: Recable the system

Recable the controller module's storage and network connections.

Steps

1. Recable the system.
2. Verify that the cabling is correct by using Active IQ Config Advisor.
   a. Download and install Config Advisor.
   b. Enter the information for the target system, and then click Collect Data.
   c. Click the Cabling tab, and then examine the output. Make sure that all disk shelves are displayed and all disks appear in the output, correcting any cabling issues you find.
   d. Check other cabling by clicking the appropriate tab, and then examining the output from Config Advisor.

Step 2: Reassign disks

If the storage system is in an HA pair, the system ID of the new controller module is automatically assigned to the disks when the giveback occurs at the end of the procedure. You must confirm the system ID change when you boot the *replacement* controller and then verify that the change was implemented.

This procedure applies only to systems running ONTAP in an HA pair.

1. If the *replacement* controller is in Maintenance mode (showing the `*>` prompt, exit Maintenance mode and go to the LOADER prompt: `halt`
2. From the LOADER prompt on the *replacement* controller, boot the controller, entering `y` if you are prompted to override the system ID due to a system ID mismatch:`boot_ontap`
3. Wait until the `Waiting for giveback…` message is displayed on the *replacement* controller console and then, from the healthy controller, verify that the new partner system ID has been automatically assigned: `storage failover show`

   In the command output, you should see a message that the system ID has changed on the impaired controller, showing the correct old and new IDs. In the following example, node2 has undergone replacement and has a new system ID of 151759706.

```
node1> `storage failover show`
                                     Takeover
Node               Partner           Possible     State Description
------------       ------------      --------
-------------------------------------
node1              node2             false        System ID changed on
partner (Old:
                                                   151759755, New:
151759706), In takeover
node2              node1             -            Waiting for giveback
(HA mailboxes)
```

4. From the healthy controller, verify that any coredumps are saved:
   a. Change to the advanced privilege level: `set -privilege advanced`

      You can respond `Y` when prompted to continue into advanced mode. The advanced mode prompt appears (*>).

   b. Save any coredumps: `system node run -node` *`local-node-name`* `partner savecore`
   c. Wait for the `savecore`command to complete before issuing the giveback.

      You can enter the following command to monitor the progress of the savecore command: `system node run -node` *`local-node-name`* `partner savecore -s`

   d. Return to the admin privilege level: `set -privilege admin`
5. If your storage system has Storage or Volume Encryption configured, you must restore Storage or Volume Encryption functionality by using one of the following procedures, depending on whether you are using onboard or external key management:
   - Restore onboard key management encryption keys
   - Restore external key management encryption keys
6. Give back the controller:
   a. From the healthy controller, give back the replaced controller's storage: `storage failover giveback -ofnode` *`replacement_node_name`*

      The *replacement* controller takes back its storage and completes booting.

      If you are prompted to override the system ID due to a system ID mismatch, you should enter `y`.

      > If the giveback is vetoed, you can consider overriding the vetoes.

      Find the High-Availability Configuration content for your version of ONTAP 9

   b. After the giveback has been completed, confirm that the HA pair is healthy and that takeover is possible: `storage failover show`

      The output from the `storage failover show` command should not include the System ID changed

on partner message.

7. Verify that the disks were assigned correctly: `storage disk show -ownership`

   The disks belonging to the *replacement* controller should show the new system ID. In the following example, the disks owned by node1 now show the new system ID, 1873775277:

```
node1> `storage disk show -ownership`

Disk  Aggregate Home  Owner  DR Home  Home ID    Owner ID  DR Home ID
Reserver  Pool
----- ------    ----- ------ -------- -------    -------    -------
---------  ---
1.0.0  aggr0_1  node1 node1  -        1873775277 1873775277  -
1873775277 Pool0
1.0.1  aggr0_1  node1 node1           1873775277 1873775277  -
1873775277 Pool0
.
.
.
```

8. Verify that the expected volumes are present for each controller: `vol show -node node-name`
9. If you disabled automatic takeover on reboot, enable it from the healthy controller: `storage failover modify -node replacement-node-name -onreboot true`

Complete system restoration - AFF A320

To restore your system to full operation, you must restore the NetApp Storage Encryption configuration (if necessary), and install licenses for the new controller, and return the failed part to NetApp, as described in the RMA instructions shipped with the kit.

Step 1: Install licenses for the replacement controller in ONTAP

You must install new licenses for the *replacement* node if the impaired node was using ONTAP features that require a standard (node-locked) license. For features with standard licenses, each node in the cluster should have its own key for the feature.

About this task

Until you install license keys, features requiring standard licenses continue to be available to the *replacement* node. However, if the impaired node was the only node in the cluster with a license for the feature, no configuration changes to the feature are allowed. Also, using unlicensed features on the node might put you out of compliance with your license agreement, so you should install the replacement license key or keys on the *replacement* node as soon as possible.

Before you begin

The licenses keys must be in the 28-character format.

You have a 90-day grace period in which to install the license keys. After the grace period, all old licenses are

invalidated. After a valid license key is installed, you have 24 hours to install all of the keys before the grace period ends.

Steps

1. If you need new license keys, obtain replacement license keys on the NetApp Support Site in the My Support section under Software licenses.

   > The new license keys that you require are automatically generated and sent to the email address on file. If you fail to receive the email with the license keys within 30 days, you should contact technical support.

2. Install each license key: `system license add -license-code license-key, license-key...`
3. Remove the old licenses, if desired:
   a. Check for unused licenses: `license clean-up -unused -simulate`
   b. If the list looks correct, remove the unused licenses: `license clean-up -unused`

Step 2: Verify LIFs and registering the serial number

Before returning the *replacement* node to service, you should verify that the LIFs are on their home ports, and register the serial number of the *replacement* node if AutoSupport is enabled, and reset automatic giveback.

Steps

1. Verify that the logical interfaces are reporting to their home server and ports: `network interface show -is-home false`

   If any LIFs are listed as false, revert them to their home ports: `network interface revert -vserver * -lif *`

2. Register the system serial number with NetApp Support.
   - If AutoSupport is enabled, send an AutoSupport message to register the serial number.
   - If AutoSupport is not enabled, call NetApp Support to register the serial number.
3. If an AutoSupport maintenance window was triggered, end it by using the `system node autosupport invoke -node * -type all -message MAINT=END` command.
4. If automatic giveback was disabled, reenable it: `storage failover modify -node local -auto -giveback true`

Step 3: Return the failed part to NetApp

Return the failed part to NetApp, as described in the RMA instructions shipped with the kit. See the Part Return & Replacements page for further information.

Copyright information

Copyright © 2024 NetApp, Inc. All Rights Reserved. Printed in the U.S. No part of this document covered by copyright may be reproduced in any form or by any means—graphic, electronic, or mechanical, including photocopying, recording, taping, or storage in an electronic retrieval system—without prior written permission of the copyright owner.

Software derived from copyrighted NetApp material is subject to the following license and disclaimer:

THIS SOFTWARE IS PROVIDED BY NETAPP “AS IS” AND WITHOUT ANY EXPRESS OR IMPLIED WARRANTIES, INCLUDING, BUT NOT LIMITED TO, THE IMPLIED WARRANTIES OF MERCHANTABILITY AND FITNESS FOR A PARTICULAR PURPOSE, WHICH ARE HEREBY DISCLAIMED. IN NO EVENT SHALL NETAPP BE LIABLE FOR ANY DIRECT, INDIRECT, INCIDENTAL, SPECIAL, EXEMPLARY, OR CONSEQUENTIAL DAMAGES (INCLUDING, BUT NOT LIMITED TO, PROCUREMENT OF SUBSTITUTE GOODS OR SERVICES; LOSS OF USE, DATA, OR PROFITS; OR BUSINESS INTERRUPTION) HOWEVER CAUSED AND ON ANY THEORY OF LIABILITY, WHETHER IN CONTRACT, STRICT LIABILITY, OR TORT (INCLUDING NEGLIGENCE OR OTHERWISE) ARISING IN ANY WAY OUT OF THE USE OF THIS SOFTWARE, EVEN IF ADVISED OF THE POSSIBILITY OF SUCH DAMAGE.

NetApp reserves the right to change any products described herein at any time, and without notice. NetApp assumes no responsibility or liability arising from the use of products described herein, except as expressly agreed to in writing by NetApp. The use or purchase of this product does not convey a license under any patent rights, trademark rights, or any other intellectual property rights of NetApp.

The product described in this manual may be protected by one or more U.S. patents, foreign patents, or pending applications.

LIMITED RIGHTS LEGEND: Use, duplication, or disclosure by the government is subject to restrictions as set forth in subparagraph (b)(3) of the Rights in Technical Data -Noncommercial Items at DFARS 252.227-7013 (FEB 2014) and FAR 52.227-19 (DEC 2007).

Data contained herein pertains to a commercial product and/or commercial service (as defined in FAR 2.101) and is proprietary to NetApp, Inc. All NetApp technical data and computer software provided under this Agreement is commercial in nature and developed solely at private expense. The U.S. Government has a non-exclusive, non-transferrable, nonsublicensable, worldwide, limited irrevocable license to use the Data only in connection with and in support of the U.S. Government contract under which the Data was delivered. Except as provided herein, the Data may not be used, disclosed, reproduced, modified, performed, or displayed without the prior written approval of NetApp, Inc. United States Government license rights for the Department of Defense are limited to those rights identified in DFARS clause 252.227-7015(b) (FEB 2014).

Trademark information

NETAPP, the NETAPP logo, and the marks listed at http://www.netapp.com/TM are trademarks of NetApp, Inc. Other company and product names may be trademarks of their respective owners.