X91148A module

Install and maintain

NetApp
March 22, 2024

This PDF was generated from https://docs.netapp.com/us-en/ontap-systems/a700/x91148a-module-install-overview.html on March 22, 2024. Always check docs.netapp.com for the latest.

Table of Contents

X91148A module . . . 1
Overview of adding an X91148A module - AFF A700 . . . 1
Add an X91148A module in a system with open slots - A700 . . . 1
Add an X91148A storage module in a system with no open slots - A700 . . . 3

X91148A module

Overview of adding an X91148A module - AFF A700

You can add an I/O module to your system by either replacing a NIC or storage adapter with a new one in a fully-populated system, or by adding a new NIC or storage adapter into an empty chassis slot in your system.

Before you begin

- Check the NetApp Hardware Universe to make sure that the new I/O module is compatible with your system and version of ONTAP you're running.
- If multiple slots are available, check the slot priorities in NetApp Hardware Universe and use the best one available for your I/O module.
- To non-disruptively add an I/O module, you must takeover the target controller, remove the slot blanking cover in the target slot or remove an existing I/O module, add the new or replacement I/O module, and then giveback the target controller.
- Make sure that all other components are functioning properly.

Add an X91148A module in a system with open slots - A700

You can add an X91148A module into an empty module slot in your system as either a 100GbE NIC or a storage module for the NS224 storage shelves.

- Your system must be running ONTAP 9.8 and later.
- To non-disruptively add the X91148A module, you must takeover the target controller, remove the slot blanking cover in the target slot, add the module, and then giveback the target controller.
- There must be one or more open slots available on your system.
- If multiple slots are available, install the module according to the slot priority matrix for the X91148A module in the NetApp Hardware Universe.
- If you are adding the X91148A module as a storage module, you must install the module slots 3 and/or 7.
- If you are adding the X91148A module as a 100GbE NIC, you can use any open slot. However, by default, slots 3 and 7 are set as storage slots. If you wish to use those slots as network slots and will not add NS224 shelves, you must modify the slots for networking use with the `storage port modify -node` *`node name`* `-port` *`port name`* `-mode network` command. See the NetApp Hardware Universe for other slots that can be used by the X91148A module for networking.
- All other components in the system must be functioning properly; if not, you must contact technical support.

Option 1: Add an X91148A module as a NIC module

To add an X91148A module as a NIC module in a system with open slots, you must follow the specific sequence of steps.

Steps

1. Shutdown controller A:
   a. Disable automatic giveback: `storage failover modify -node local -auto-giveback false`
   b. Take over the target node: `storage failover takeover -ofnode` *`target_node_name`*

      The console connection shows that the node drops to the LOADER prompt when the takeover is complete.
2. If you are not already grounded, properly ground yourself.
3. Remove the target slot blanking cover:
   a. Depress the lettered and numbered cam button.
   b. Rotate the cam latch down until it is in a horizontal position.
   c. Remove the blanking cover.
4. Install the X91148A module:
   a. Align the X91148A module with the edges of the slot.
   b. Slide the X91148A module into the slot until the lettered and numbered I/O cam latch begins to engage with the I/O cam pin.
   c. Push the I/O cam latch all the way up to lock the module in place.
5. Cable the module to the data switches.
6. Reboot controller A from the LOADER prompt: `bye`

   This reinitializes the PCIe cards and other components and reboots the node.
7. Giveback the node from the partner node: `storage failover giveback -ofnode` *`target_node_name`*
8. Enable automatic giveback if it was disabled: `storage failover modify -node local -auto -giveback true`
9. Repeat these steps for controller B.

Option 2: Add an X91148A module as a storage module

To add an X91148A module as a storage module in a system with open slots, you must follow the specific sequence of steps.

- This procedure presumes slots 3 and/or 7 are open.

Steps

1. Shut down controller A:
   a. Disable automatic giveback: `storage failover modify -node local -auto-giveback false`

b. Take over the target node: `storage failover takeover -ofnode target_node_name`

   The console connection shows that the node drops to the LOADER prompt when the takeover is complete.

2. If you are not already grounded, properly ground yourself.
3. Remove the target slot blanking cover:
   a. Depress the lettered and numbered cam button.
   b. Rotate the cam latch down until it is in a horizontal position.
   c. Remove the blanking cover.
4. Install the X91148A module into slot 3:
   a. Align the X91148A module with the edges of the slot.
   b. Slide the X91148A module into the slot until the lettered and numbered I/O cam latch begins to engage with the I/O cam pin.
   c. Push the I/O cam latch all the way up to lock the module in place.
   d. If you are installing a second X91148A module for storage, repeat this step for the module in slot 7.
5. Reboot controller A:
   - If the replacement module is not the same model as the old module, reboot the BMC :
     a. From the LOADER prompt, change to advanced privilege mode: `set -privilege advanced`
     b. Reboot the BMC: `sp reboot`
   - If the replacement module is the same as the old module, boot from the LOADER prompt: `bye`

     This reinitializes the PCIe cards and other components and reboots the node.
6. Giveback the node from the partner node: `storage failover giveback -ofnode target_node_name`
7. Enable automatic giveback if it was disabled: `storage failover modify -node local -auto -giveback true`
8. Repeat these steps for controller B.
9. Install and cable your NS224 shelves, as described in Hot-add - NS224 shelves.

Add an X91148A storage module in a system with no open slots - A700

You must remove one more or more existing NIC or storage modules in your system in order to install one or more X91148A storage modules into your fully-populated system.

- Your system must be running ONTAP 9.8 and later.
- To non-disruptively add the X91148A module, you must takeover the target controller, add the module, and then giveback the target controller.

- If you are adding the X91148A module as a storage adapter, you must install the module in slots 3 and/or 7.
- If you are adding the X91148A module as a 100GbE NIC, you can use any open slot. However, by default, slots 3 and 7 are set as storage slots. If you wish to use those slots as network slots and will not add NS224 shelves, you must modify the slots for networking use with the `storage port modify -node` *`node name`* `-port` *`port name`* `-mode network` command for each port. See the NetApp Hardware Universe for other slots that can be used by the X91148A module for networking.
- All other components in the system must be functioning properly; if not, you must contact technical support.

Option 1: Add an X91148A module as a NIC module

You must remove one or more existing NIC or storage modules in your system in order to install one or more X91148A NIC modules into your fully-populated system.

Steps

1. If you are adding an X91148A module into a slot that contains a NIC module with the same number of ports as the X91148A module, the LIFs will automatically migrate when its controller module is shut down. If the NIC module being replaced has more ports than the X91148A module, you must permanently reassign the affected LIFs to a different home port. See Migrating a LIF for information about using System Manager to permanently move the LIFs
2. Shut down controller A:
   a. Disable automatic giveback: `storage failover modify -node local -auto-giveback false`
   b. Take over the target node: `storage failover takeover -ofnode` *`target_node_name`*

      The console connection shows that the node drops to the LOADER prompt when the takeover is complete.
3. If you are not already grounded, properly ground yourself.
4. Unplug any cabling on the target I/O module.
5. Remove the target I/O module from the chassis:
   a. Depress the lettered and numbered cam button.

      The cam button moves away from the chassis.
   b. Rotate the cam latch down until it is in a horizontal position.

      The I/O module disengages from the chassis and moves about 1/2 inch out of the I/O slot.
   c. Remove the I/O module from the chassis by pulling on the pull tabs on the sides of the module face.

      Make sure that you keep track of which slot the I/O module was in.

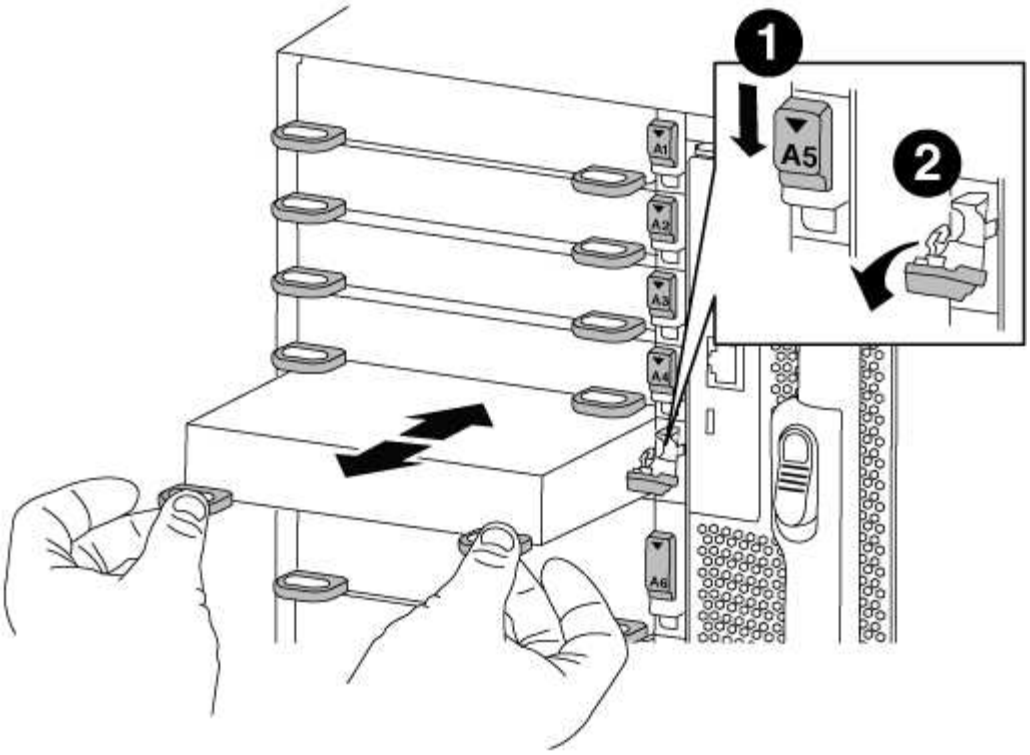

1	Lettered and numbered I/O cam latch
2	I/O cam latch completely unlocked

6. Install the X91148A module into the target slot:
   a. Align the X91148A module with the edges of the slot.
   b. Slide the X91148A module into the slot until the lettered and numbered I/O cam latch begins to engage with the I/O cam pin.
   c. Push the I/O cam latch all the way up to lock the module in place.
7. Repeat the remove and install steps to replace additional modules for controller A.
8. Cable the module or modules to the data switches.
9. Reboot controller A from the LOADER prompt: `bye`

   This reinitializes the PCIe cards and other components and reboots the node.

10. Giveback the node from the partner node: `storage failover giveback -ofnode target_node_name`
11. Enable automatic giveback if it was disabled: `storage failover modify -node local -auto -giveback true`
12. If you added the X91148A module as a NIC module in slots 3 or 7, for networking, use the `storage port modify -node` *`node name`* `-port` *`port name`* `-mode network` command for each port.

13. Repeat these steps for controller B.

Option 2: Adding an X91148A module as a storage module

You must remove one or more existing NIC or storage modules in your system in order to install one or more X91148A storage modules into your fully-populated system.

- This procedure presumes you re installing the X91148A module into slots 3 and/or 7.

Steps

1. If you are adding an X91148A module as a storage module in slots 3 and/or 7 into a slot that has an existing NIC module in it, use System Manager to permanently migrate the LIFs to different home ports, as described in Migrating a LIF.
2. Shut down controller A:
   a. Disable automatic giveback: `storage failover modify -node local -auto-giveback false`
   b. Take over the target node: `storage failover takeover -ofnode target_node_name`

      The console connection shows that the node drops to the LOADER prompt when the takeover is complete.
3. If you are not already grounded, properly ground yourself.
4. Unplug any cabling on the target I/O module.
5. Remove the target I/O module from the chassis:
   a. Depress the lettered and numbered cam button.

      The cam button moves away from the chassis.
   b. Rotate the cam latch down until it is in a horizontal position.

      The I/O module disengages from the chassis and moves about 1/2 inch out of the I/O slot.
   c. Remove the I/O module from the chassis by pulling on the pull tabs on the sides of the module face.

      Make sure that you keep track of which slot the I/O module was in.

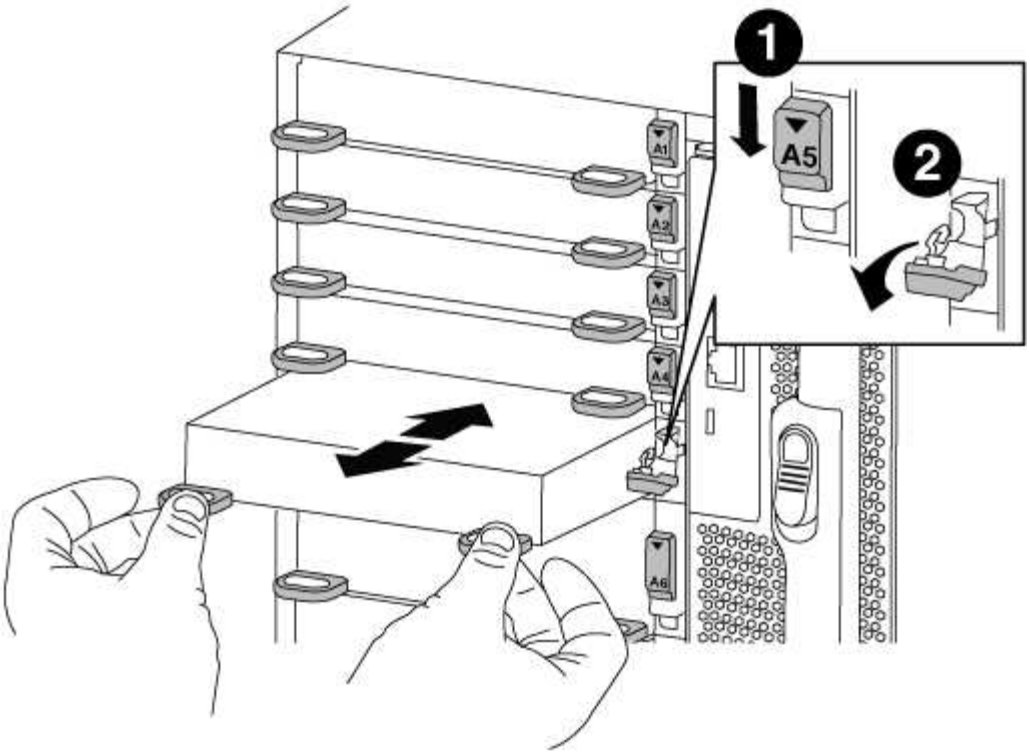

1	Lettered and numbered I/O cam latch
2	I/O cam latch completely unlocked

6. Install the X91148A module into slot 3:
   a. Align the X91148A module with the edges of the slot.
   b. Slide the X91148A module into the slot until the lettered and numbered I/O cam latch begins to engage with the I/O cam pin.
   c. Push the I/O cam latch all the way up to lock the module in place.
   d. If you are installing a second X91148A module for storage, repeat the remove and install steps for the module in slot 7.
7. Reboot controller A from the LOADER prompt: `bye`

   This reinitializes the PCIe cards and other components and reboots the node.

8. Giveback the node from the partner node: `storage failover giveback -ofnode` *`target_node_name`*
9. Enable automatic giveback if it was disabled: `storage failover modify -node local -auto -giveback true`
10. Repeat these steps for controller B.
11. Install and cable your NS224 shelves, as described in Hot-adding an NS224 drive shelf.

Copyright information

Copyright © 2024 NetApp, Inc. All Rights Reserved. Printed in the U.S. No part of this document covered by copyright may be reproduced in any form or by any means—graphic, electronic, or mechanical, including photocopying, recording, taping, or storage in an electronic retrieval system—without prior written permission of the copyright owner.

Software derived from copyrighted NetApp material is subject to the following license and disclaimer:

THIS SOFTWARE IS PROVIDED BY NETAPP “AS IS” AND WITHOUT ANY EXPRESS OR IMPLIED WARRANTIES, INCLUDING, BUT NOT LIMITED TO, THE IMPLIED WARRANTIES OF MERCHANTABILITY AND FITNESS FOR A PARTICULAR PURPOSE, WHICH ARE HEREBY DISCLAIMED. IN NO EVENT SHALL NETAPP BE LIABLE FOR ANY DIRECT, INDIRECT, INCIDENTAL, SPECIAL, EXEMPLARY, OR CONSEQUENTIAL DAMAGES (INCLUDING, BUT NOT LIMITED TO, PROCUREMENT OF SUBSTITUTE GOODS OR SERVICES; LOSS OF USE, DATA, OR PROFITS; OR BUSINESS INTERRUPTION) HOWEVER CAUSED AND ON ANY THEORY OF LIABILITY, WHETHER IN CONTRACT, STRICT LIABILITY, OR TORT (INCLUDING NEGLIGENCE OR OTHERWISE) ARISING IN ANY WAY OUT OF THE USE OF THIS SOFTWARE, EVEN IF ADVISED OF THE POSSIBILITY OF SUCH DAMAGE.

NetApp reserves the right to change any products described herein at any time, and without notice. NetApp assumes no responsibility or liability arising from the use of products described herein, except as expressly agreed to in writing by NetApp. The use or purchase of this product does not convey a license under any patent rights, trademark rights, or any other intellectual property rights of NetApp.

The product described in this manual may be protected by one or more U.S. patents, foreign patents, or pending applications.

LIMITED RIGHTS LEGEND: Use, duplication, or disclosure by the government is subject to restrictions as set forth in subparagraph (b)(3) of the Rights in Technical Data -Noncommercial Items at DFARS 252.227-7013 (FEB 2014) and FAR 52.227-19 (DEC 2007).

Data contained herein pertains to a commercial product and/or commercial service (as defined in FAR 2.101) and is proprietary to NetApp, Inc. All NetApp technical data and computer software provided under this Agreement is commercial in nature and developed solely at private expense. The U.S. Government has a non-exclusive, non-transferrable, nonsublicensable, worldwide, limited irrevocable license to use the Data only in connection with and in support of the U.S. Government contract under which the Data was delivered. Except as provided herein, the Data may not be used, disclosed, reproduced, modified, performed, or displayed without the prior written approval of NetApp, Inc. United States Government license rights for the Department of Defense are limited to those rights identified in DFARS clause 252.227-7015(b) (FEB 2014).

Trademark information

NETAPP, the NETAPP logo, and the marks listed at http://www.netapp.com/TM are trademarks of NetApp, Inc. Other company and product names may be trademarks of their respective owners.