Install and setup

Install and maintain

NetApp
March 22, 2024

This PDF was generated from https://docs.netapp.com/us-en/ontap-systems/c190/install-setup.html on March 22, 2024. Always check docs.netapp.com for the latest.

Table of Contents

Install and setup 1
Start here: Choose your installation and setup experience 1
Quick steps - AFF C190 1
Video steps - AFF C190 1
Detailed steps - AFF C190 1

Install and setup

Start here: Choose your installation and setup experience

You can choose from different content formats to guide you through installing and setting up your new storage system.

- Quick steps

  A printable PDF of step-by-step instructions with live links to additional content.

- Video steps

  Video step-by-step instructions.

- Detailed steps

  Online step-by-step instructions with live links to additional content.

Quick steps - AFF C190

Learn how to install your C190 system from racking and cabling, through initial system bring-up. Use the AFF C190 Installation and Setup Instructions if you are familiar with installing NetApp systems.

Video steps - AFF C190

The following video shows how to install and cable your system.

Animation - Install and Setup of an AFF C190

Detailed steps - AFF C190

This section gives detailed step-by-step instructions for installing a AFF C190 system.

Step 1: Prepare for installation

To install your AFF C190 system, create an account and register the system. You also need to inventory the appropriate number and type of cables for your system and collect specific network information.

Before you begin

- Make sure you have access to NetApp Hardware Universe (HWU) for information about site requirements as well as additional information on your configured system.
- Make sure you have access to the Release Notes for your version of ONTAP for more information about this system.
- Make sure you have the following items at your site:
  - Rack space for the storage system

- Phillips #2 screwdriver
- Additional networking cables to connect your system to your network switch and laptop or console with a Web browser
- A laptop or console with an RJ-45 connection and access to a Web browser

Steps

1. Unpack the contents of all boxes.
2. Record the system serial number from the controllers.

3. Set up your account:
   a. Log in to your existing account or create an account.
   b. Register (NetApp Product Registration) your system.
4. Download and install NetApp Downloads: Config Advisor on your laptop.
5. Inventory and make a note of the number and types of cables you received.

   The following table identifies the types of cables you might receive. If you receive a cable not listed in the table, see the NetApp Hardware Universe to locate the cable and identify its use.

Type of cable…	Part number and length	Connector type	For…
10 GbE cable (order dependent)	X6566B-05-R6 (112-00297), 0.5m X6566B-2-R6 (112-00299), 2m		Cluster interconnect network
	X6566B-2-R6 (112-00299), 2m X6566B-3-R6 (112-00300), 3m X6566B-5-R6 (112-00301), 5m		Data
Optical network cables (order dependent)	X6553-R6 (112-00188), 2m X6536-R6 (112-00090), 5m X6554-R6(112-00189), 15m	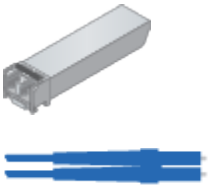	SFP + FC host network
Cat 6, RJ-45 (order dependent)	X6585-R6 (112-00291), 3m X6562-R6 (112-00196), 5m		Ethernet host and management network
Micro-USB console cable	Not applicable		Console connection during software setup on non-Windows or Mac laptop/console
Power cables	Not applicable		Powering up the system

6. Download and complete the Cluster Configuration Worksheet.

Step 2: Install the hardware

Install your system in a 4-post rack or NetApp system cabinet, as applicable.

Steps

1. Install the rail kits, as needed.
2. Install and secure your system using the instructions included with the rail kit.

   You need to be aware of the safety concerns associated with the weight of the system.

3. Attach cable management devices (as shown).

   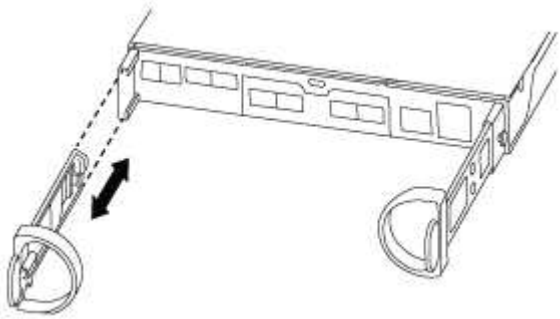

4. Place the bezel on the front of the system.

Step 3: Cable controllers to your network

Cable the controllers to your network by using the two-node switchless cluster method or the cluster interconnect network method.

The following table identifies the cable type with the call out number and cable color in the illustrations for both two-node switchless cluster network cabling and switched cluster network cabling.

Cabling	Connection type
1	Cluster interconnect
2	Controllers to host data network switches
3	Controllers to management network switch

Option 1: Two-node switchless cluster

Learn how to cable a two-node switchless cluster.

Before you begin

Contact your network administrator for information about connecting the system to the switches.

Be sure to check the illustration arrow for the proper cable connector pull-tab orientation.

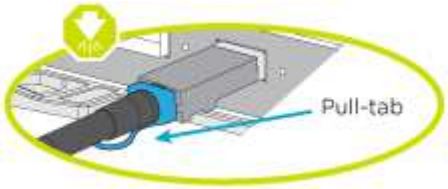

As you insert the connector, you should feel it click into place; if you do not feel it click, remove it, turn it around and try again.

If connecting to an optical switch, insert the SFP into the controller port before cabling to the port.

About this task

Refer to the following cabling illustrations when cabling between the controllers and the switches.

UTA2 data network configurations

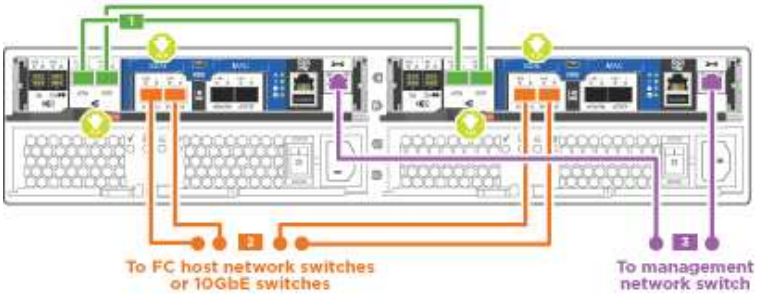

Ethernet network configurations

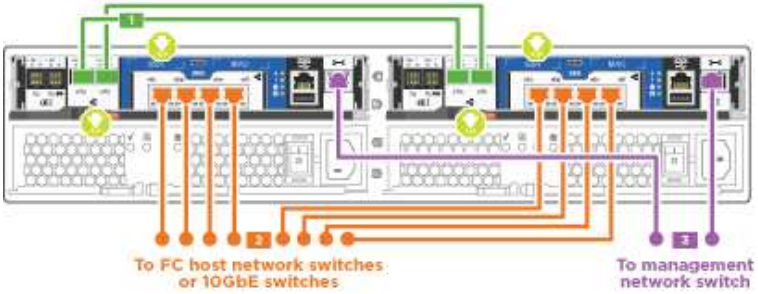

Perform the following steps on each controller module.

Steps

1. Cable the cluster interconnect ports e0a to e0a and e0b to e0b with the cluster interconnect cable.

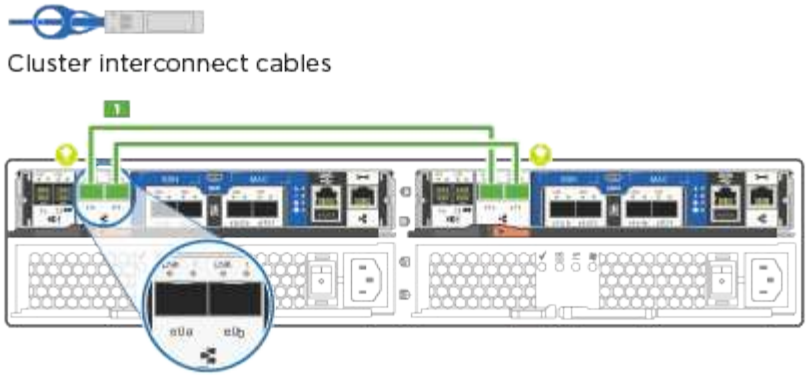

2. Cable the controllers to either a UTA2 data network or an Ethernet network.

UTA2 data network configurations

Use one of the following cable types to cable the e0c/0c and e0d/0d or e0e/0e and e0f/0f data ports to your host network.

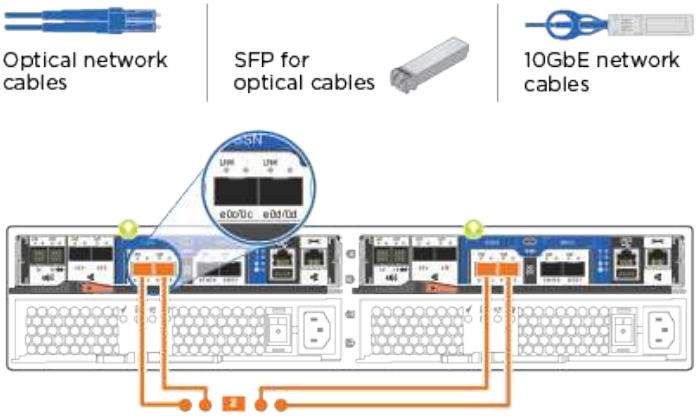

Ethernet network configurations

Use the Cat 6 RJ45 cable to cable the e0c through e0f ports to your host network. in the following illustration.

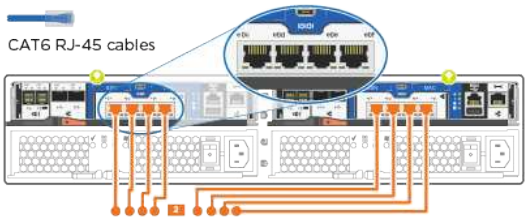

3. Cable the e0M ports to the management network switches with the RJ45 cables.

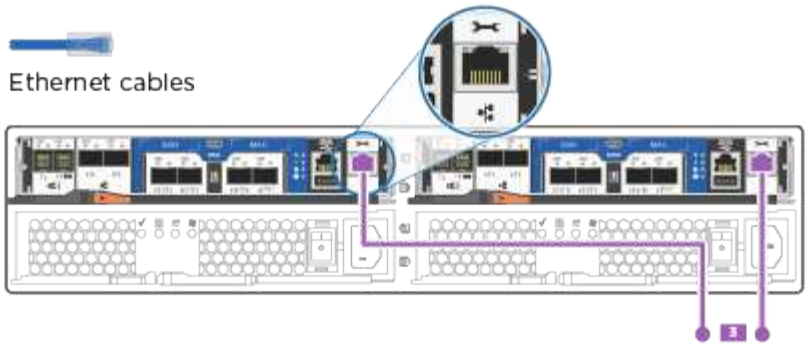

DO NOT plug in the power cords at this point.

Option 2: Switched cluster

Learn how to cable a switched cluster.

Before you begin

Contact your network administrator for information about connecting the system to the switches.

Be sure to check the illustration arrow for the proper cable connector pull-tab orientation.

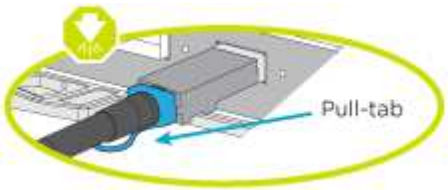

As you insert the connector, you should feel it click into place; if you do not feel it click, remove it, turn it around and try again.

If connecting to an optical switch, insert the SFP into the controller port before cabling to the port.

About this task

Refer to the following cabling illustrations when cabling between the controllers and the switches.

Unified network configurations

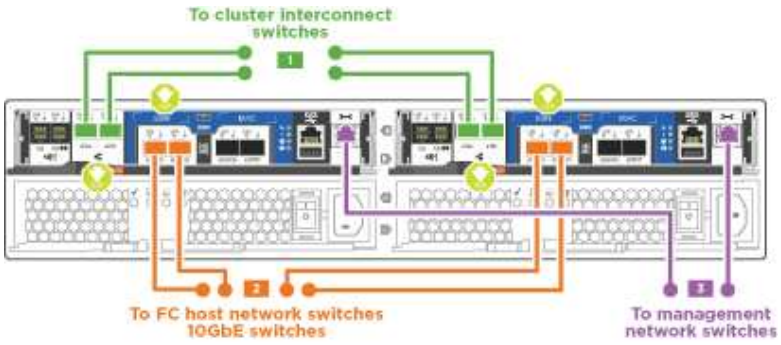

Ethernet network configurations

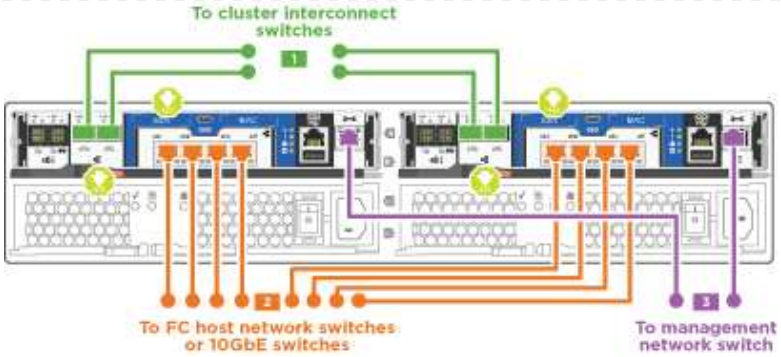

Perform the following steps on each controller module.

Steps

1. Cable e0a and e0b to the cluster interconnect switches with the cluster interconnect cable.

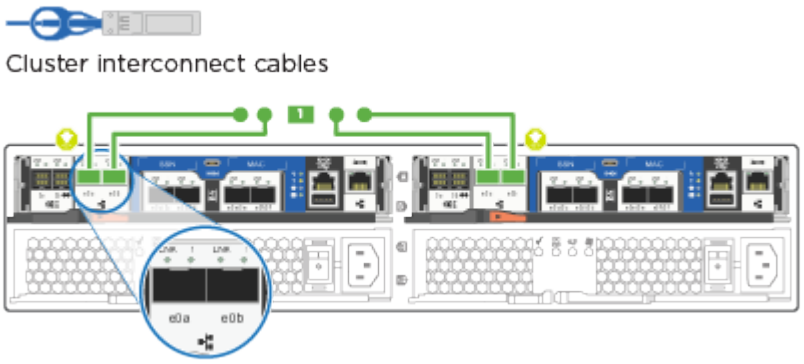

2. Cable the controllers to either a UTA2 data network or an Ethernet network.

UTA2 data network configurations

Use one of the following cable types to cable the e0c/0c and e0d/0d or e0e/0e and e0f/0f data ports to your host network.

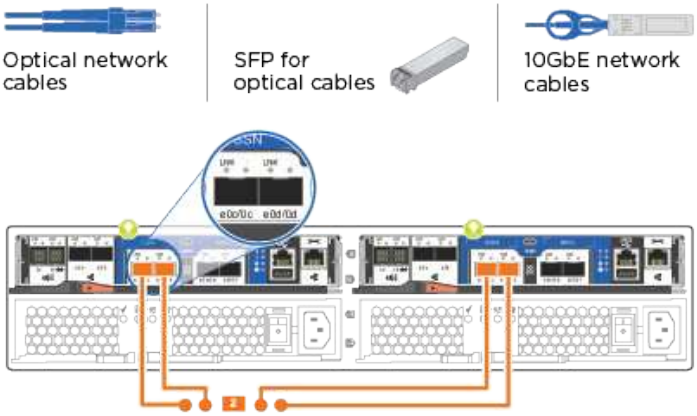

Ethernet network configurations	Use the Cat 6 RJ45 cable to cable the e0c through e0f ports to your host network.

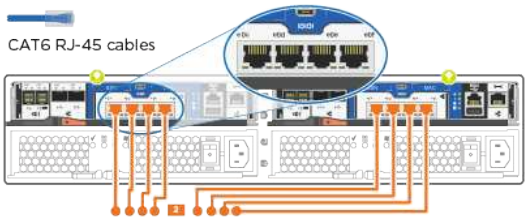

3. Cable the e0M ports to the management network switches with the RJ45 cables.

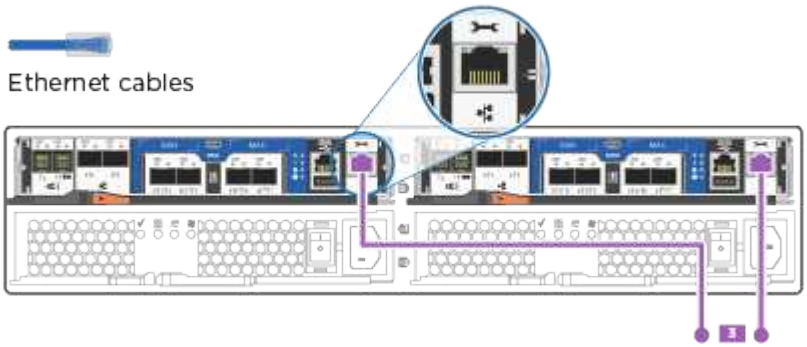

DO NOT plug in the power cords at this point.

Step 4: Complete system setup

Complete the system setup and configuration using cluster discovery with only a connection to the switch and laptop, or by connecting directly to a controller in the system and then connecting to the management switch.

Option 1: If network discovery is enabled

Learn how to complete system setupIf you have network discovery enabled on your laptop.

Steps

1. Plug the power cords into the controller power supplies, and then connect them to power sources on different circuits.
2. Turn on the power switches to both nodes.

Initial booting may take up to eight minutes..

3. Make sure that your laptop has network discovery enabled.

   See your laptop's online help for more information.

4. Connect your laptop to the Management switch:

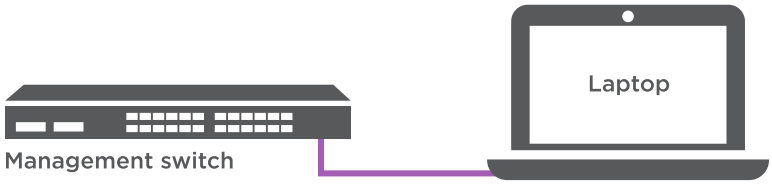

1. Select an ONTAP icon listed to discover:

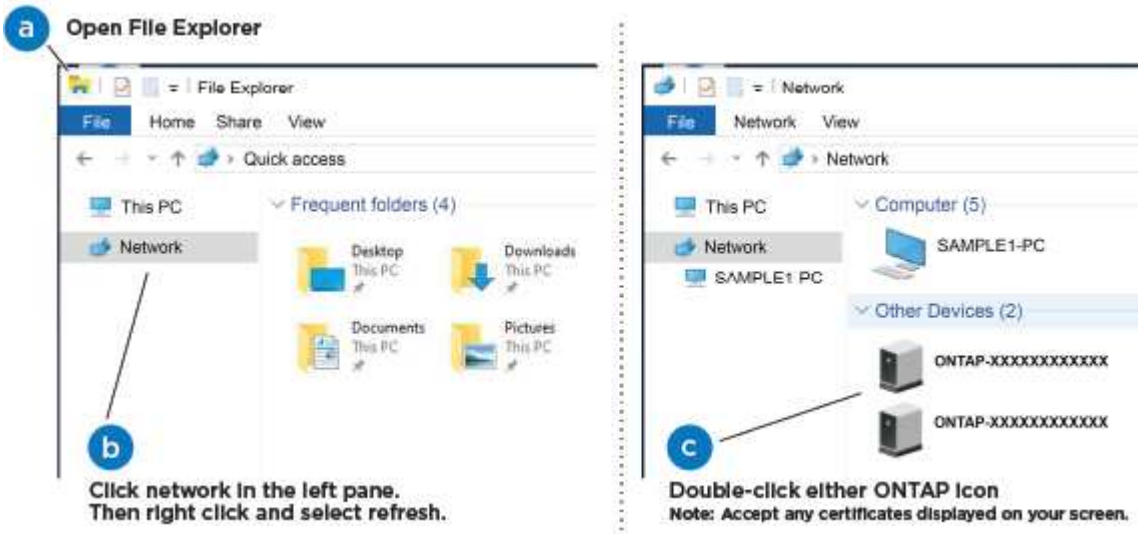

   a. Open File Explorer.

b. Click **Network** in the left pane.

c. Right-click and select **refresh**.

d. Double-click either ONTAP icon and accept any certificates displayed on your screen.

> XXXXX is the system serial number for the target node.

System Manager opens.

2. Use System Manager guided setup to configure your system using the data you collected in the ONTAP Configuration Guide.
3. Verify the health of your system by running Config Advisor.
4. After you have completed the initial configuration, go to the ONTAP documentation site for information about configuring additional features in ONTAP.

> The default port configuration for Unified configuration systems is CNA mode; if connecting to an FC host network, you have to modify the ports for FC mode.

Option 2: If network discovery is not enabled

Learn how to complete the system setup if network discovery is not enabled on your laptop.

Steps

1. Cable and configure your laptop or console:

   a. Set the console port on the laptop or console to 115,200 baud with N-8-1.

   > See your laptop or console's online help for how to configure the console port.

   b. Connect the console cable to the laptop or console, and connect the console port on the controller using the console cable that came with your system.

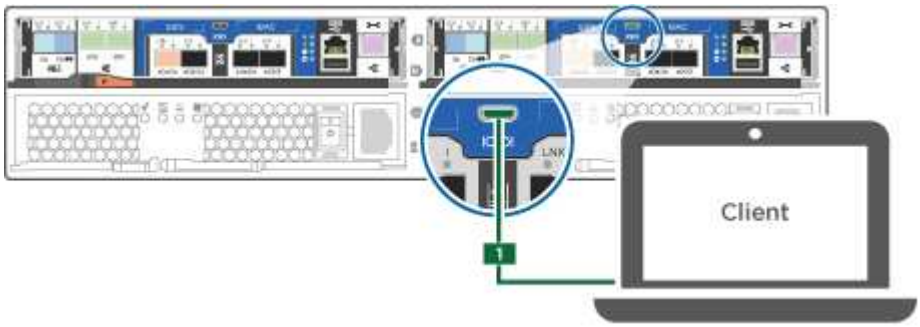

   c. Connect the laptop or console to the switch on the management subnet.

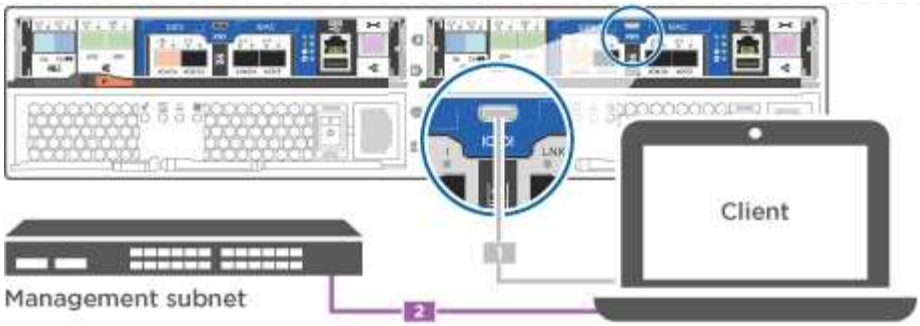

d. Assign a TCP/IP address to the laptop or console, using one that is on the management subnet.

2. Plug the power cords into the controller power supplies, and then connect them to power sources on different circuits.
3. Turn on the power switches to both nodes.

Initial booting may take up to eight minutes..

4. Assign an initial node management IP address to one of the nodes.

If the management network has DHCP…	Then…
Configured	Record the IP address assigned to the new controllers.
Not configured	a. Open a console session using PuTTY, a terminal server, or the equivalent for your environment. Check your laptop or console's online help if you do not know how to configure PuTTY. b. Enter the management IP address when prompted by the script.

5. Using System Manager on your laptop or console, configure your cluster:
   a. Point your browser to the node management IP address.

   The format for the address is https://x.x.x.x.

   b. Configure the system using the data you collected in the ONTAP Configuration Guide.
6. Verify the health of your system by running Config Advisor.

7. After you have completed the initial configuration, go to the ONTAP &ocumentation site for information about configuring additional features in ONTAP.

> The default port configuration for Unified configuration systems is CNA mode; if connecting to an FC host network, you have to modify the ports for FC mode.

Copyright information

Copyright © 2024 NetApp, Inc. All Rights Reserved. Printed in the U.S. No part of this document covered by copyright may be reproduced in any form or by any means—graphic, electronic, or mechanical, including photocopying, recording, taping, or storage in an electronic retrieval system—without prior written permission of the copyright owner.

Software derived from copyrighted NetApp material is subject to the following license and disclaimer:

THIS SOFTWARE IS PROVIDED BY NETAPP “AS IS” AND WITHOUT ANY EXPRESS OR IMPLIED WARRANTIES, INCLUDING, BUT NOT LIMITED TO, THE IMPLIED WARRANTIES OF MERCHANTABILITY AND FITNESS FOR A PARTICULAR PURPOSE, WHICH ARE HEREBY DISCLAIMED. IN NO EVENT SHALL NETAPP BE LIABLE FOR ANY DIRECT, INDIRECT, INCIDENTAL, SPECIAL, EXEMPLARY, OR CONSEQUENTIAL DAMAGES (INCLUDING, BUT NOT LIMITED TO, PROCUREMENT OF SUBSTITUTE GOODS OR SERVICES; LOSS OF USE, DATA, OR PROFITS; OR BUSINESS INTERRUPTION) HOWEVER CAUSED AND ON ANY THEORY OF LIABILITY, WHETHER IN CONTRACT, STRICT LIABILITY, OR TORT (INCLUDING NEGLIGENCE OR OTHERWISE) ARISING IN ANY WAY OUT OF THE USE OF THIS SOFTWARE, EVEN IF ADVISED OF THE POSSIBILITY OF SUCH DAMAGE.

NetApp reserves the right to change any products described herein at any time, and without notice. NetApp assumes no responsibility or liability arising from the use of products described herein, except as expressly agreed to in writing by NetApp. The use or purchase of this product does not convey a license under any patent rights, trademark rights, or any other intellectual property rights of NetApp.

The product described in this manual may be protected by one or more U.S. patents, foreign patents, or pending applications.

LIMITED RIGHTS LEGEND: Use, duplication, or disclosure by the government is subject to restrictions as set forth in subparagraph (b)(3) of the Rights in Technical Data -Noncommercial Items at DFARS 252.227-7013 (FEB 2014) and FAR 52.227-19 (DEC 2007).

Data contained herein pertains to a commercial product and/or commercial service (as defined in FAR 2.101) and is proprietary to NetApp, Inc. All NetApp technical data and computer software provided under this Agreement is commercial in nature and developed solely at private expense. The U.S. Government has a non-exclusive, non-transferrable, nonsublicensable, worldwide, limited irrevocable license to use the Data only in connection with and in support of the U.S. Government contract under which the Data was delivered. Except as provided herein, the Data may not be used, disclosed, reproduced, modified, performed, or displayed without the prior written approval of NetApp, Inc. United States Government license rights for the Department of Defense are limited to those rights identified in DFARS clause 252.227-7015(b) (FEB 2014).

Trademark information

NETAPP, the NETAPP logo, and the marks listed at http://www.netapp.com/TM are trademarks of NetApp, Inc. Other company and product names may be trademarks of their respective owners.