Install and setup

Install and maintain

NetApp
March 22, 2024

This PDF was generated from https://docs.netapp.com/us-en/ontap-systems/c800/install-setup.html on March 22, 2024. Always check docs.netapp.com for the latest.

Table of Contents

Install and setup . . . 1
Start here: Choose your installation and setup experience . . . 1
Quick steps - AFF C800 . . . 1
Video steps - AFF C800 . . . 1
Detailed steps - AFF C800 . . . 1

Install and setup

Start here: Choose your installation and setup experience

For most configurations (including ASA configurations), you can choose from different content formats.

- Quick steps

  A printable PDF of step-by-step instructions with live links to additional content.

- Video steps

  Video step-by-step instructions.

- Detailed steps

  Online step-by-step instructions with live links to additional content.

If your system is in a MetroCluster IP configuration, see the Install MetroCluster IP Configuration instructions.

Quick steps - AFF C800

This section gives graphic instructions for a typical installation of your system from racking and cabling, through initial system bring-up. Use this guide if you are familiar with installing NetApp systems.

Access the AFF C800 Installation and Setup Instructions

Video steps - AFF C800

The following video shows how to install and cable your new system.

Animation - Installation and Setup of an AFF C800

If you have a MetroCluster configuration, use the MetroCluster installation content.

MetroCluster Documentation

Detailed steps - AFF C800

This section gives detailed step-by-step instructions for installing an AFF C800 system.

If you have a MetroCluster configuration, use the MetroCluster installation content.

MetroCluster Documentation

Step 1: Prepare for installation

To install your AFF C800 system, you need to create an account and register the system. You also need to inventory the appropriate number and type of cables for your system and collect specific network information.

You need to have access to the NetApp Hardware Universe (HWU) for information about site requirements as well as additional information on your configured system. You might also want to have access to the Release Notes for your version of ONTAP for more information about this system.

What you need

You need to provide the following at your site:

- Rack space for the storage system
- Phillips #2 screwdriver
- Additional networking cables to connect your system to your network switch and laptop or console with a Web browser
  1. Unpack the contents of all boxes.
  2. Record the system serial number from the controllers.

Steps

1. Set up your account:
   a. Log in to your existing account or create an account.
   b. Register (NetApp Product Registration) your system.
2. Download and install NetApp Downloads: Config Advisor on your laptop.
3. Inventory and make a note of the number and types of cables you received.

   The following table identifies the types of cables you might receive. If you receive a cable not listed in the table, see the NetApp Hardware Universe to locate the cable and identify its use.

Connector type	Part number and length	Type of cable…	For…
100 GbE cable	X66211A-05 (112-00595), 0.5m		HA interconnect
	X66211A-05 (112-00595), 0.5m; X66211-1 (112-00573), 1m		Cluster interconnect network
	X66211-2 (112-00574), 2m; X66211-5 (112-00576), 5m		Storage, Data
10 GbE cable	X6566B-3-R6 (112-00300), 3m; X6566B-5-R6 (112-00301), 5m		Data
25 GbE cable	X66240A-2 (112-00598), 2m; X66240A-5 (112-00600), 5m		Data
RJ-45 (order dependent)	Not applicable		Management
Fibre Channel	X66250-2 (112-00342) 2m; X66250-5 (112-00344) 5m; X66250-15 (112-00346) 15m; X66250-30 (112-00347) 30m		
Micro-USB console cable	Not applicable		Console connection during software setup
Power cables	Not applicable		Powering up the system

4. Download and complete the Cluster Configuration Worksheet.

Step 2: Install the hardware

You need to install your system in a 4-post rack or NetApp system cabinet, as applicable.

Steps

1. Install the rail kits, as needed.

   Installing SuperRail into a four-post rack

2. Install and secure your system using the instructions included with the rail kit.

   You need to be aware of the safety concerns associated with the weight of the system.

3. Attach cable management devices (as shown).

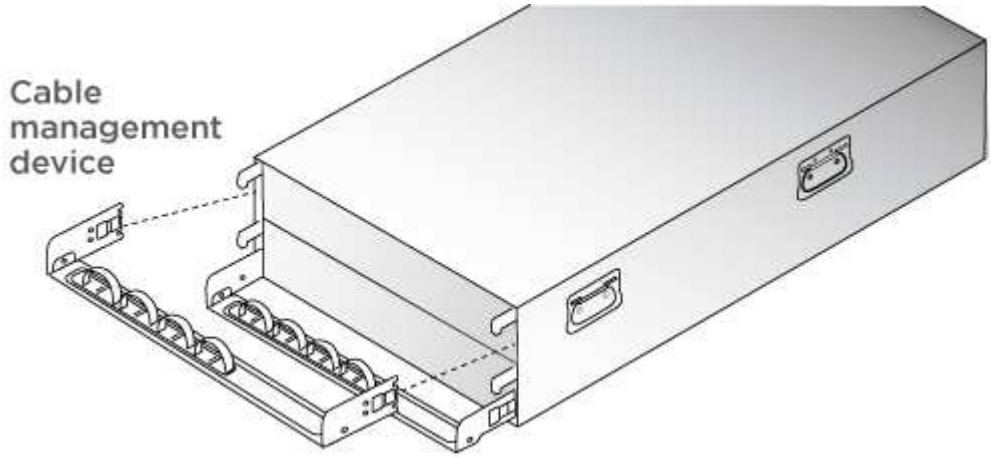

4. Place the bezel on the front of the system.

Step 3: Cable controllers

There is required cabling for your platform's cluster using the two-node switchless cluster method or the cluster interconnect network method. There is optional cabling to the Fibre Channel or iSCSI host networks or direct-attached storage. This cabling is not exclusive; you can have cable to a host network and storage.

Required cabling: Cable controllers to a cluster

Cable the controllers to a cluster by using the two-node switchless cluster method or by using the cluster interconnect network.

Option 1: Cable a two-node switchless cluster

Management network ports on the controllers are connected to switches. The HA interconnect and cluster interconnect ports are cabled on both controllers.

Before you begin

Contact your network administrator for information about connecting the system to the switches.

Be sure to check the illustration arrow for the proper cable connector pull-tab orientation.

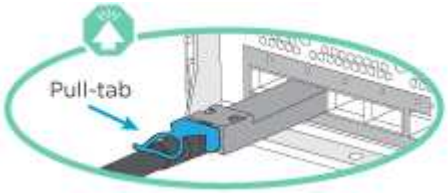

As you insert the connector, you should feel it click into place; if you do not feel it click, remove it, turn it around and try again.

Steps

1. Use the animation or the tabulated steps to complete the cabling between the controllers and the switches:

   Animation - Cable a two-node switchless cluster

Step	Perform on each controller module
1	Cable the HA interconnect ports: • e0b to e0b • e1b to e1b 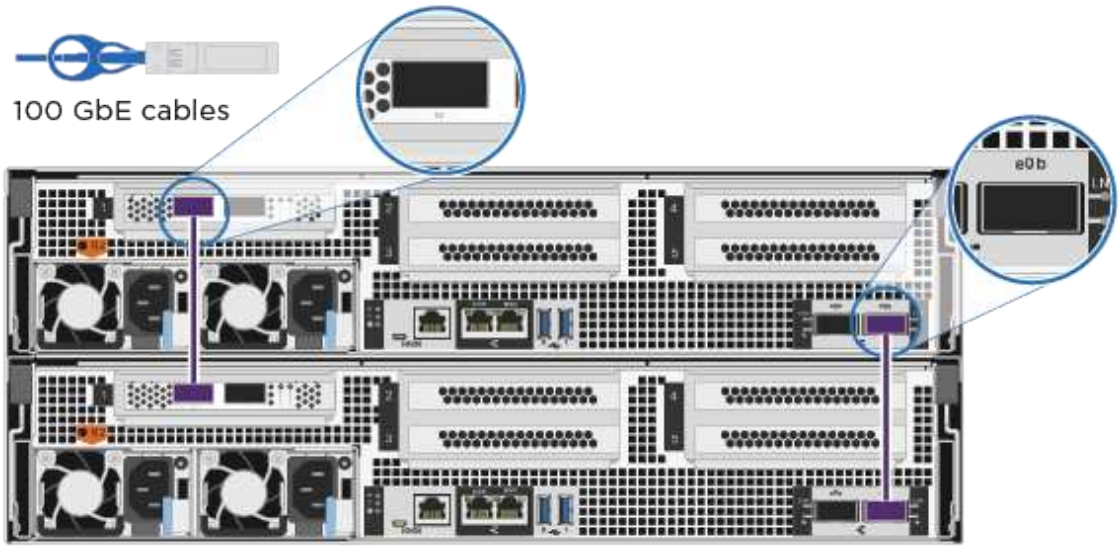
2	Cable the cluster interconnect ports: • e0a to e0a • e1a to e1a 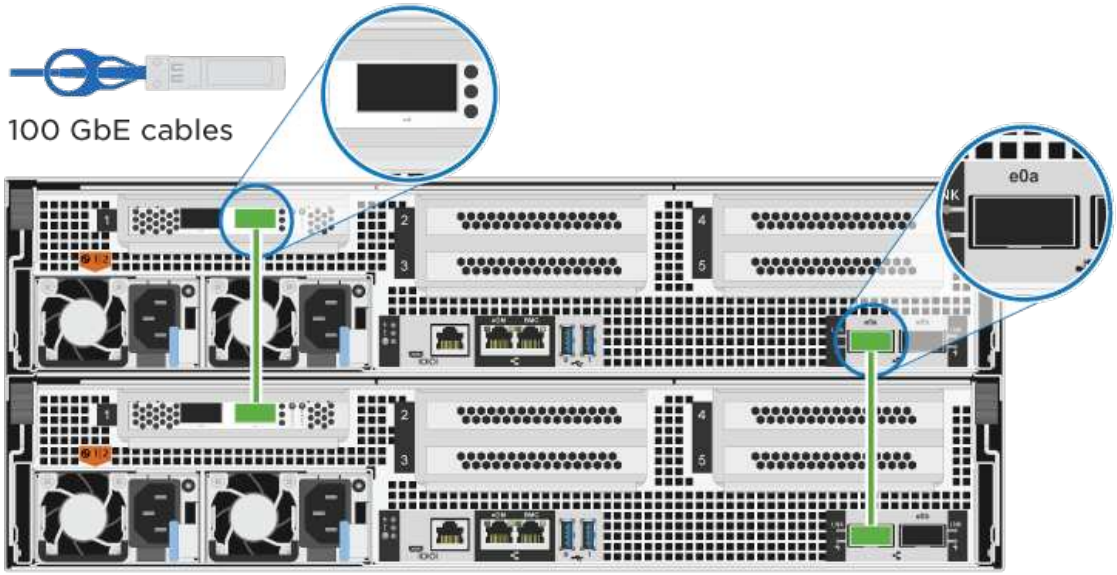

Step	Perform on each controller module
3	Cable the management ports to the management network switches 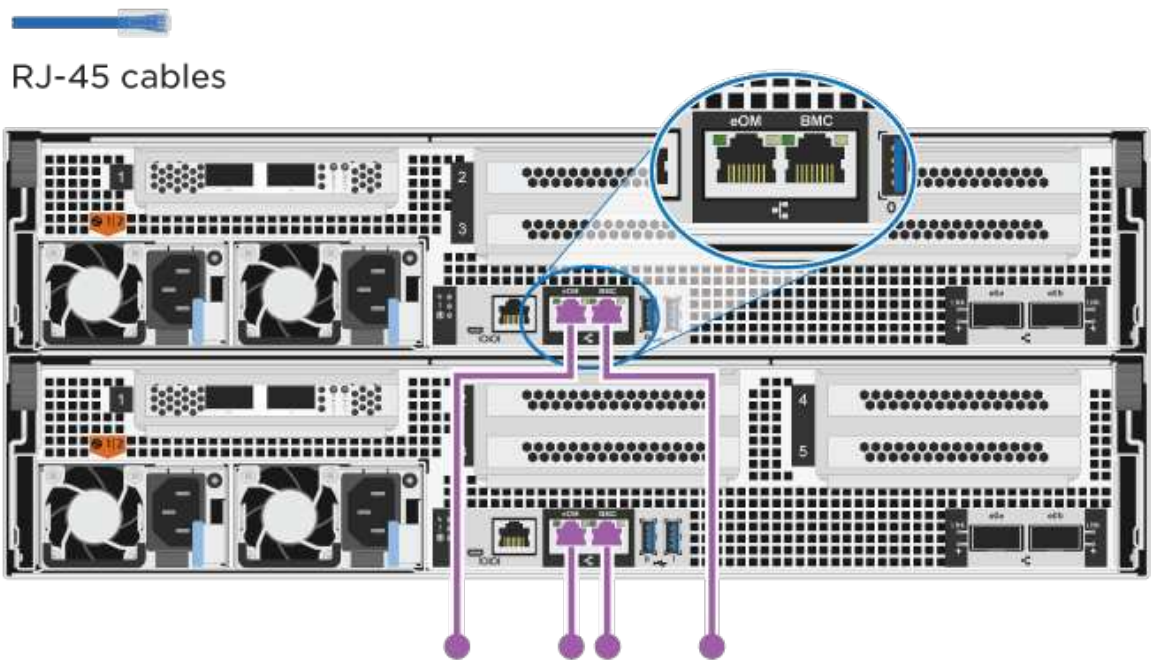
!	DO NOT plug in the power cords at this point.

2. To perform optional cabling, see:
   - Option 1: Cable to a Fibre Channel host network
   - Option 2: Cable to a 10GbE host network
   - Option 3: Cable the controllers to a single drive shelf
   - Option 4: Cable the controllers to two drive shelves
3. To complete setting up your system, see Step 4: Complete system setup and configuration.

Option 2: Cable a switched cluster

Cluster interconnect and management network ports on the controllers are connected to switches while the HA interconnect ports are cabled on both controllers.

Before you begin

Contact your network administrator for information about connecting the system to the switches.

Be sure to check the illustration arrow for the proper cable connector pull-tab orientation.

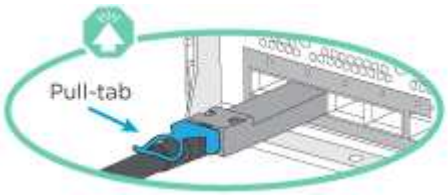

As you insert the connector, you should feel it click into place; if you do not feel it click, remove it, turn it around and try again.

Steps

1. Use the animation or the tabulated steps to complete the cabling between the controllers and the switches:

   Animation - Cable a switched cluster

Step	Perform on each controller module
1	Cable the HA interconnect ports: • e0b to e0b • e1b to e1b 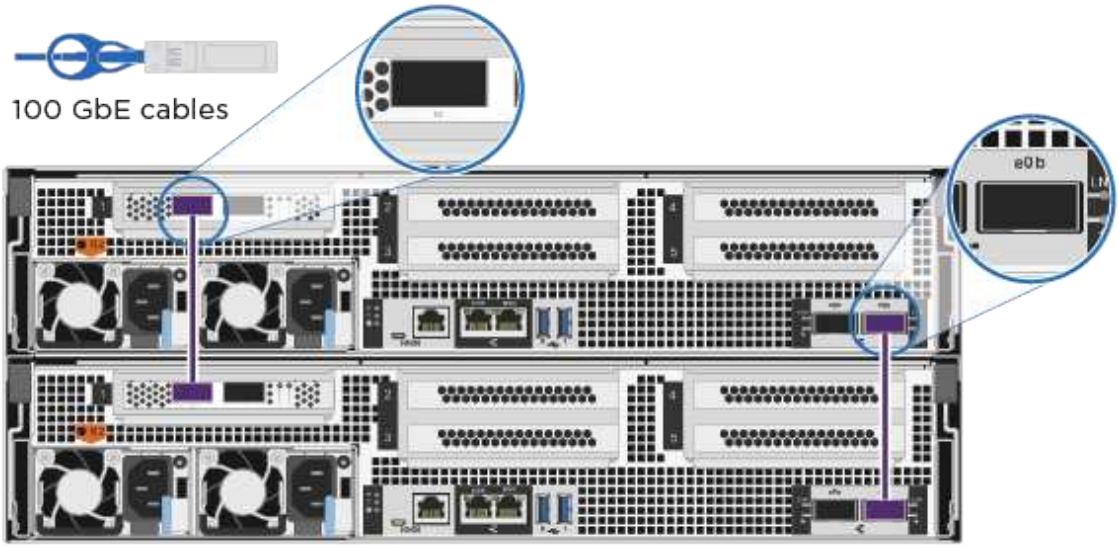

Step	Perform on each controller module
2	Cable the cluster interconnect ports to the 100 GbE cluster interconnect switches. **e0a** e1a 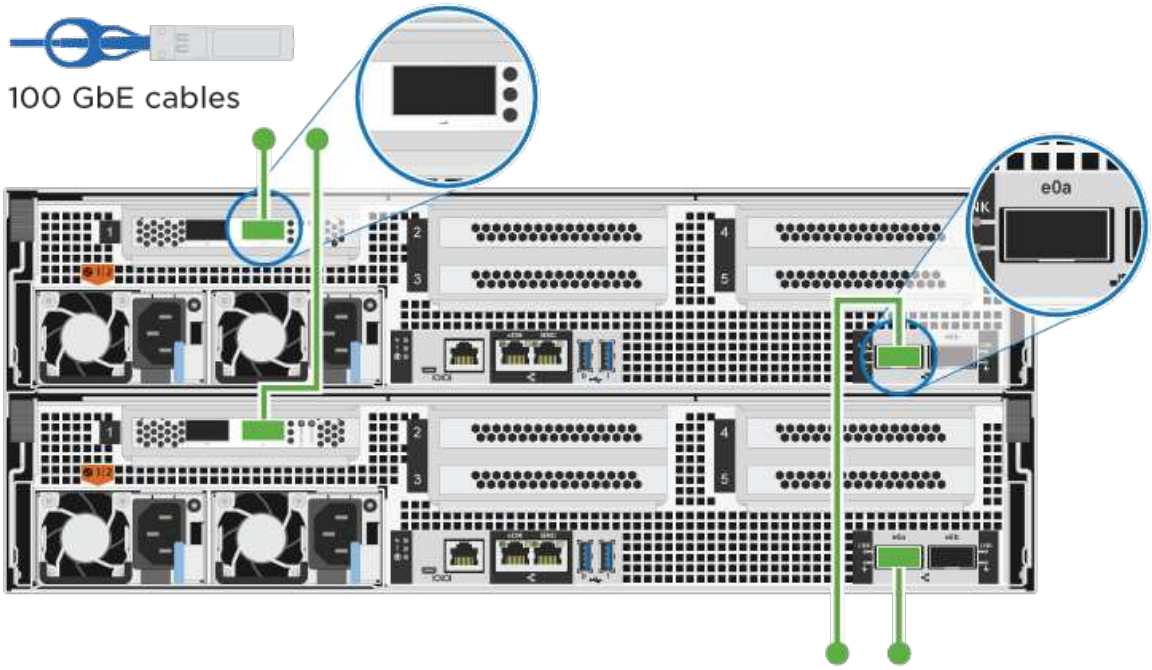
3	Cable the management ports to the management network switches 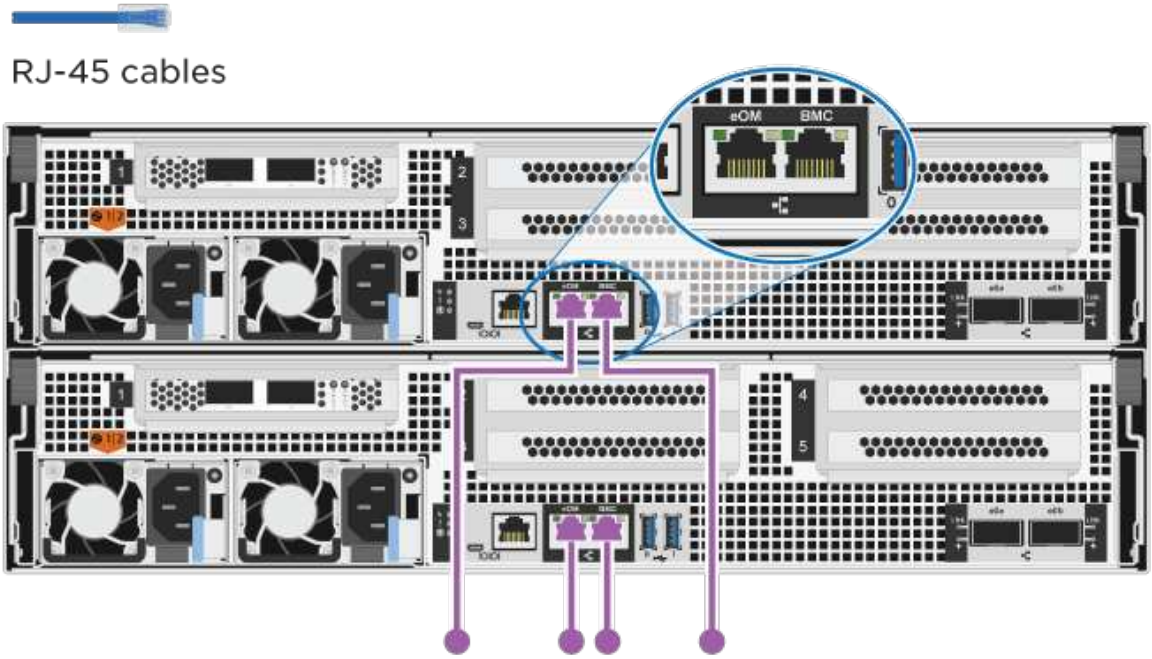
!	DO NOT plug in the power cords at this point.

2. To perform optional cabling, see:

- Option 1: Cable to a Fibre Channel host network
- Option 2: Cable to a 10GbE host network
- Option 3: Cable the controllers to a single drive shelf
- Option 4: Cable the controllers to two drive shelves

3. To complete setting up your system, see Step 4: Complete system setup and configuration.

Optional cabling: Cable configuration-dependent options

You have configuration-dependent optional cabling to the Fibre Channel or iSCSI host networks or direct-attached storage. This cabling is not exclusive; you can have cabling to a host network and storage.

Option 1: Cable to a Fibre Channel host network

Fibre Channel ports on the controllers are connected to Fibre Channel host network switches.

Before you begin

Contact your network administrator for information about connecting the system to the switches.

Be sure to check the illustration arrow for the proper cable connector pull-tab orientation.

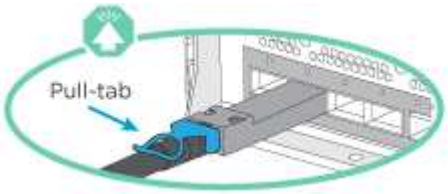

As you insert the connector, you should feel it click into place; if you do not feel it click, remove it, turn it around and try again.

Step	Perform on each controller module
1	Cable ports 2a through 2d to the FC host switches. 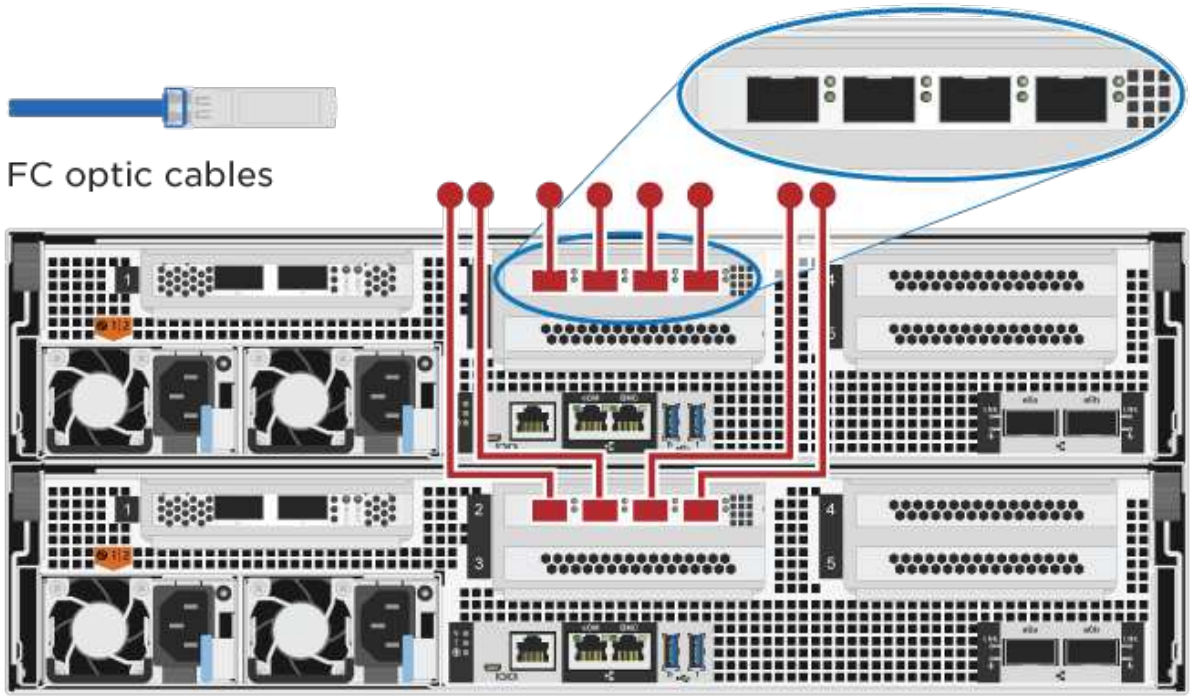
2	To perform other optional cabling, choose from: • Option 3: Cable the controllers to a single drive shelf • Option 4: Cable the controllers to two drive shelves
3	To complete setting up your system, see Step 4: Complete system setup and configuration.

Option 2: Cable to a 10GbE host network

10GbE ports on the controllers are connected to 10GbE host network switches.

Before you begin

Contact your network administrator for information about connecting the system to the switches.

Be sure to check the illustration arrow for the proper cable connector pull-tab orientation.

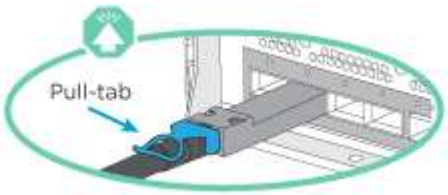

As you insert the connector, you should feel it click into place; if you do not feel it click, remove it, turn it around and try again.

Step	Perform on each controller module
1	Cable ports e4a through e4d to the 10GbE host network switches. 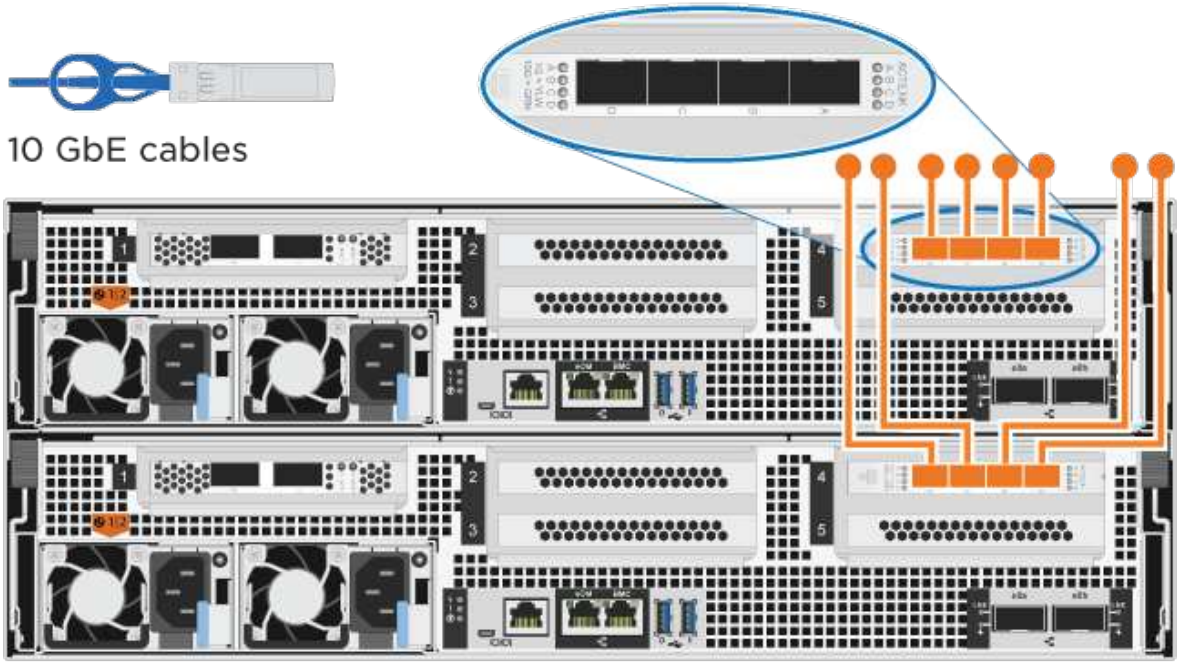
2	To perform other optional cabling, choose from: • Option 3: Cable the controllers to a single drive shelf • Option 4: Cable the controllers to two drive shelves
3	To complete setting up your system, see Step 4: Complete system setup and configuration.

Option 3: Cable the controllers to a single drive shelf

You must cable each controller to the NSM modules on the NS224 drive shelf.

Before you begin

Be sure to check the illustration arrow for the proper cable connector pull-tab orientation.

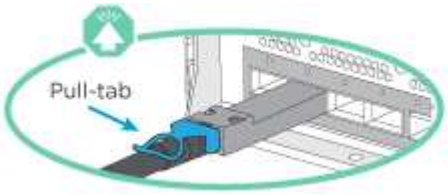

> As you insert the connector, you should feel it click into place; if you do not feel it click, remove it, turn it around and try again.

Use the animation or the tabulated steps to cable your controllers to a single shelf:

Animation - Cable the controllers to a single drive shelf

Step	Perform on each controller module
1	Cable controller A to the shelf: 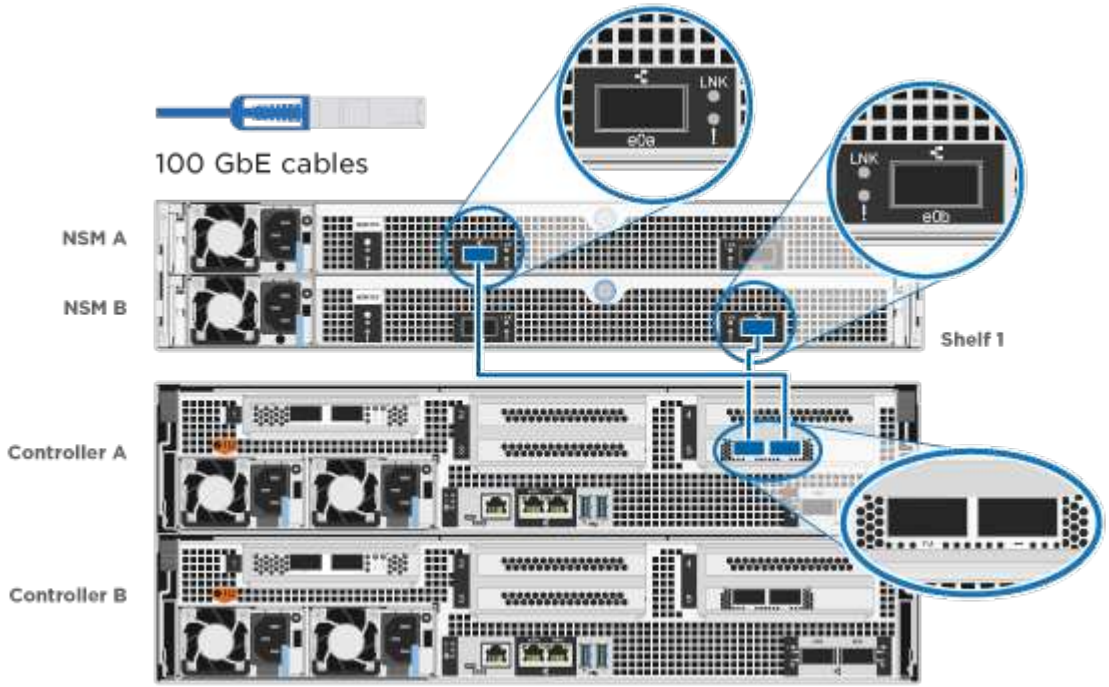
2	Cable controller B to the shelf: 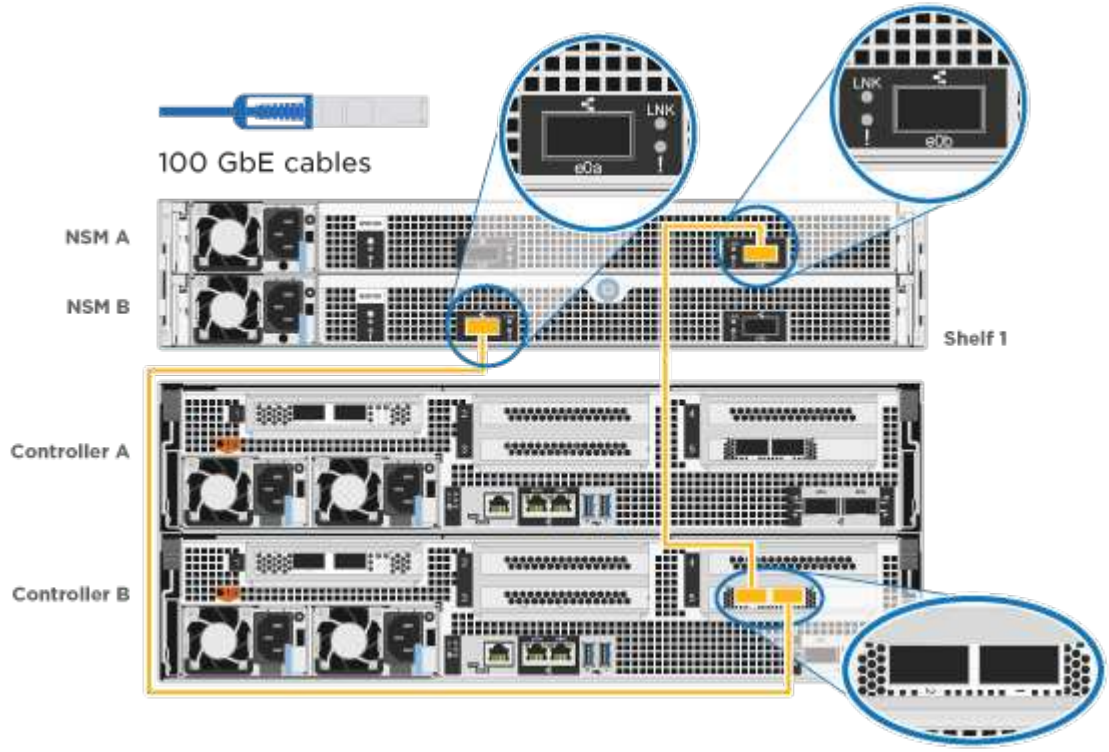

To complete setting up your system, see Step 4: Complete system setup and configuration.

Option 4: Cable the controllers to two drive shelves

You must cable each controller to the NSM modules on both NS224 drive shelves.

Before you begin

Be sure to check the illustration arrow for the proper cable connector pull-tab orientation.

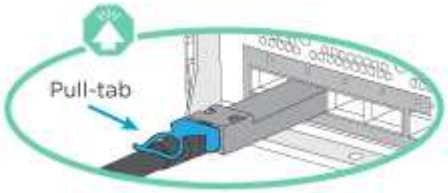

> As you insert the connector, you should feel it click into place; if you do not feel it click, remove it, turn it around and try again.

Use the animation or the tabulated steps to cable your controllers to two drive shelves:

Animation - Cable the controllers to two drive shelves

Step	Perform on each controller module
1	Cable controller A to the shelves: 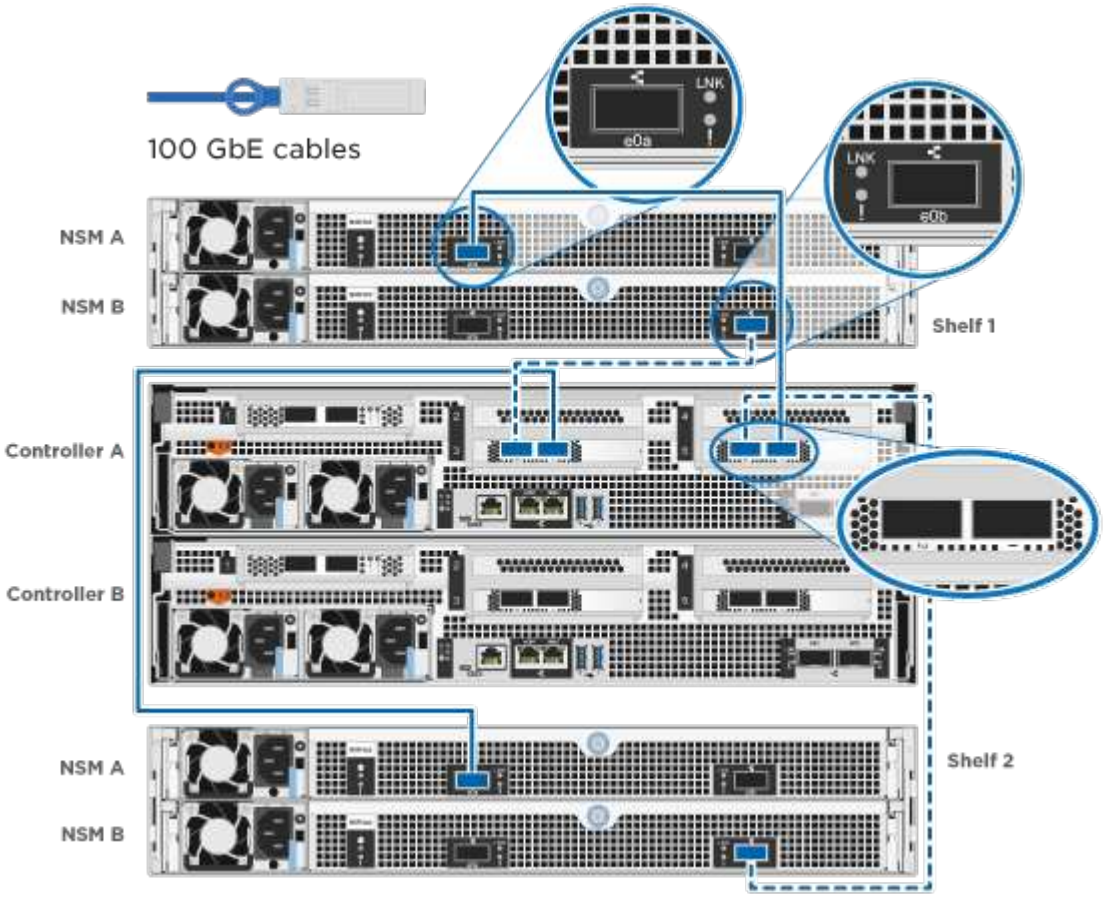

Step	Perform on each controller module
2	Cable controller B to the shelves: 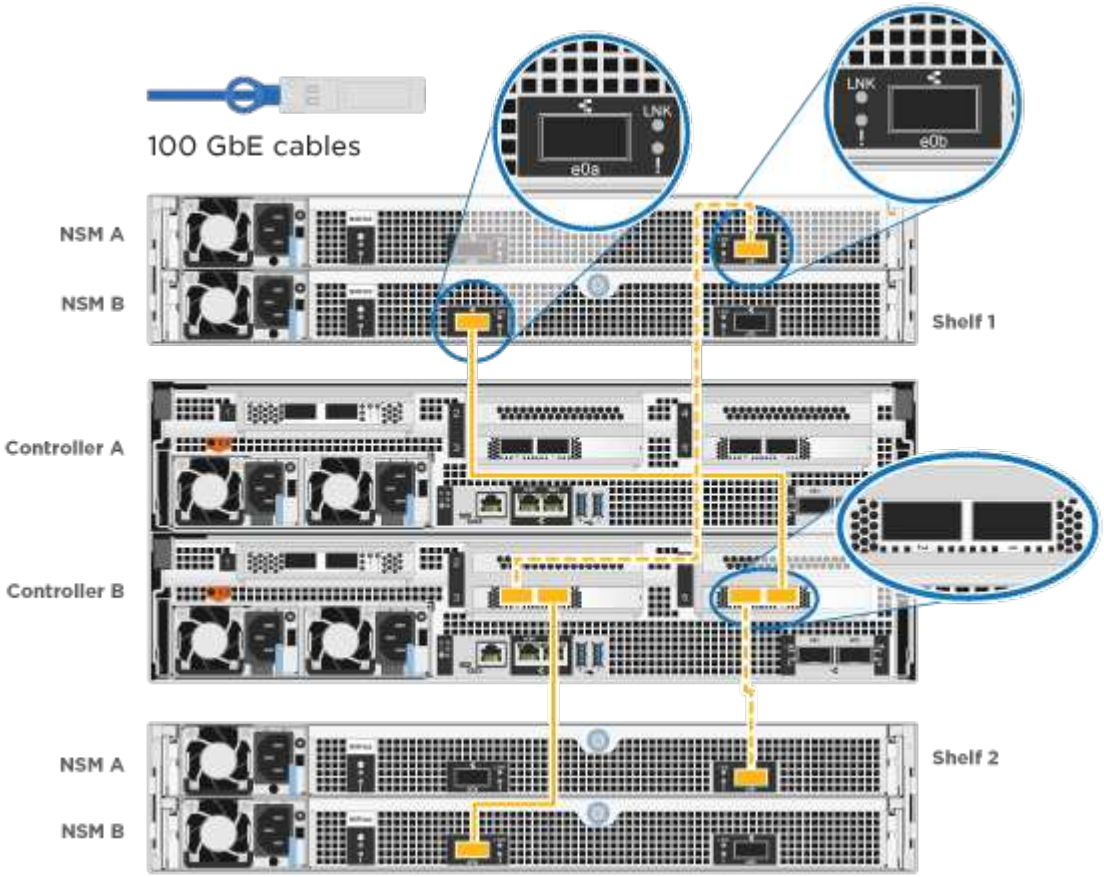

To complete setting up your system, see Step 4: Complete system setup and configuration.

Step 4: Complete system setup and configuration

Complete the system setup and configuration using cluster discovery with only a connection to the switch and laptop, or by connecting directly to a controller in the system and then connecting to the management switch.

Option 1: Complete system setup and configuration if network discovery is enabled

If you have network discovery enabled on your laptop, you can complete system setup and configuration using automatic cluster discovery.

Steps

1. Use the following animation to power on and set shelf IDs for one or more drive shelves:

   For NS224 drive shelves, shelf IDs are pre-set to 00 and 01. If you want to change the shelf IDs, use the straightened end of a paperclip, or narrow tipped ball point pen to access the shelf ID button behind the faceplate.

   Animation - Set drive shelf IDs

2. Plug the power cords into the controller power supplies, and then connect them to power sources on different circuits.

The system begins to boot. Initial booting may take up to eight minutes.

3. Make sure that your laptop has network discovery enabled.

   See your laptop's online help for more information.

4. Connect your laptop to the Management switch:

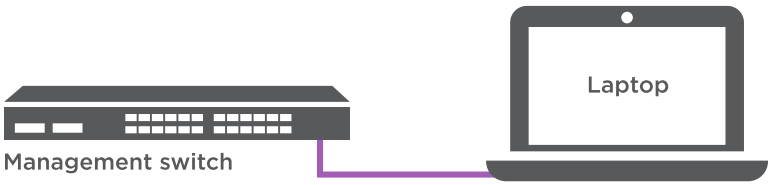

1. Select an ONTAP icon listed to discover:

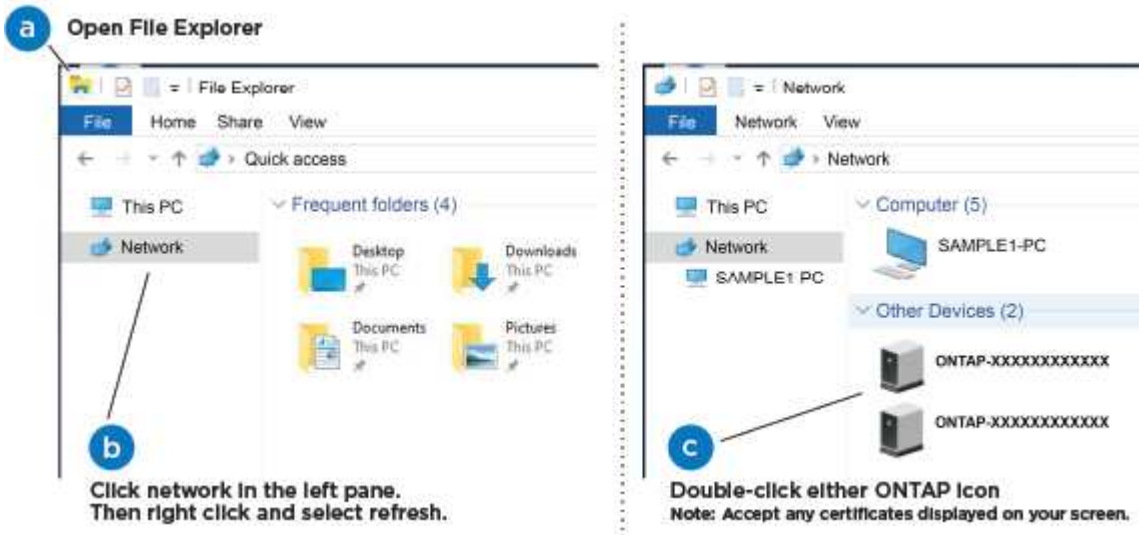

   a. Open File Explorer.
   b. Click **Network** in the left pane.
   c. Right-click and select **refresh**.
   d. Double-click either ONTAP icon and accept any certificates displayed on your screen.

   > XXXXX is the system serial number for the target node.

   System Manager opens.

2. Use System Manager guided setup to configure your system using the data you collected in the ONTAP Configuration Guide.
3. Set up your account and download Active IQ Config Advisor:
   a. Log in to your existing account or create an account.

      NetApp Support Registration

   b. Register your system.

NetApp Product Registration

c. Download Active IQ Config Advisor.

NetApp Downloads: Config Advisor

4. Verify the health of your system by running Config Advisor.
5. After you have completed the initial configuration, go to the ONTAP & ONTAP System Manager Documentation Resources page for information about configuring additional features in ONTAP.

Option 2: Complete system setup and configuration if network discovery is not enabled

If network discovery is not enabled on your laptop, you must complete the configuration and setup using this task.

Steps

1. Cable and configure your laptop or console:
   a. Set the console port on the laptop or console to 115,200 baud with N-8-1.

   See your laptop or console's online help for how to configure the console port.

   b. Connect the console cable to the laptop or console, and connect the console port on the controller using the console cable that came with your system.

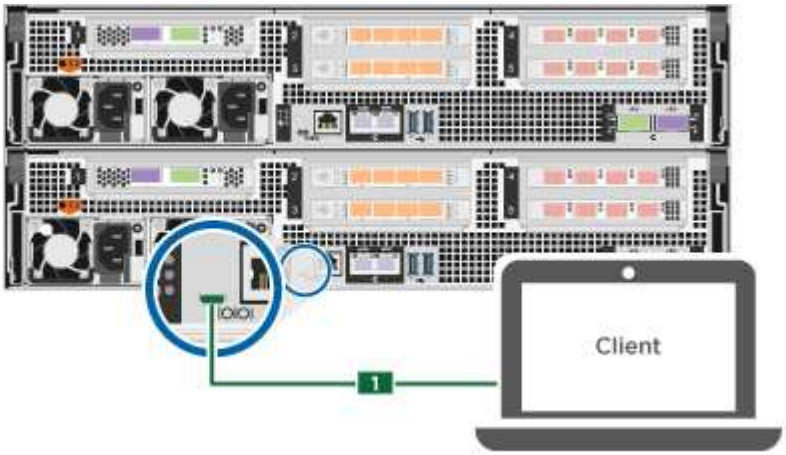

   c. Connect the laptop or console to the switch on the management subnet.

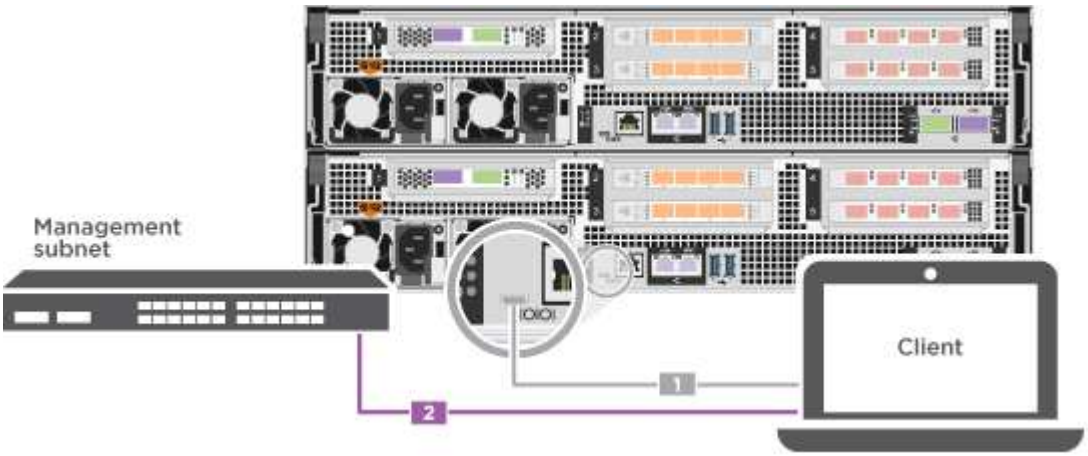

d. Assign a TCP/IP address to the laptop or console, using one that is on the management subnet.

2. Use the following animation to power on and set shelf IDs for one or more drive shelves:

   For NS224 drive shelves, shelf IDs are pre-set to 00 and 01. If you want to change the shelf IDs, use the straightened end of a paperclip, or narrow tipped ball point pen to access the shelf ID button behind the faceplate.

   Animation - Set drive shelf IDs

3. Plug the power cords into the controller power supplies, and then connect them to power sources on different circuits.

   The system begins to boot. Initial booting may take up to eight minutes.

4. Assign an initial node management IP address to one of the nodes.

If the management network has DHCP…	Then…
Configured	Record the IP address assigned to the new controllers.
Not configured	a. Open a console session using PuTTY, a terminal server, or the equivalent for your environment. Check your laptop or console's online help if you do not know how to configure PuTTY. b. Enter the management IP address when prompted by the script.

5. Using System Manager on your laptop or console, configure your cluster:
   a. Point your browser to the node management IP address.

      The format for the address is https://x.x.x.x.

   b. Configure the system using the data you collected in the ONTAP Configuration Guide.
6. Set up your account and download Active IQ Config Advisor:
   a. Log in to your existing account or create an account.

      NetApp Support Registration

   b. Register your system.

      NetApp Product Registration

   c. Download Active IQ Config Advisor.

      NetApp Downloads: Config Advisor

7. Verify the health of your system by running Config Advisor.
8. After you have completed the initial configuration, go to the ONTAP & ONTAP System Manager Documentation Resources page for information about configuring additional features in ONTAP.

Copyright information

Copyright © 2024 NetApp, Inc. All Rights Reserved. Printed in the U.S. No part of this document covered by copyright may be reproduced in any form or by any means—graphic, electronic, or mechanical, including photocopying, recording, taping, or storage in an electronic retrieval system—without prior written permission of the copyright owner.

Software derived from copyrighted NetApp material is subject to the following license and disclaimer:

THIS SOFTWARE IS PROVIDED BY NETAPP “AS IS” AND WITHOUT ANY EXPRESS OR IMPLIED WARRANTIES, INCLUDING, BUT NOT LIMITED TO, THE IMPLIED WARRANTIES OF MERCHANTABILITY AND FITNESS FOR A PARTICULAR PURPOSE, WHICH ARE HEREBY DISCLAIMED. IN NO EVENT SHALL NETAPP BE LIABLE FOR ANY DIRECT, INDIRECT, INCIDENTAL, SPECIAL, EXEMPLARY, OR CONSEQUENTIAL DAMAGES (INCLUDING, BUT NOT LIMITED TO, PROCUREMENT OF SUBSTITUTE GOODS OR SERVICES; LOSS OF USE, DATA, OR PROFITS; OR BUSINESS INTERRUPTION) HOWEVER CAUSED AND ON ANY THEORY OF LIABILITY, WHETHER IN CONTRACT, STRICT LIABILITY, OR TORT (INCLUDING NEGLIGENCE OR OTHERWISE) ARISING IN ANY WAY OUT OF THE USE OF THIS SOFTWARE, EVEN IF ADVISED OF THE POSSIBILITY OF SUCH DAMAGE.

NetApp reserves the right to change any products described herein at any time, and without notice. NetApp assumes no responsibility or liability arising from the use of products described herein, except as expressly agreed to in writing by NetApp. The use or purchase of this product does not convey a license under any patent rights, trademark rights, or any other intellectual property rights of NetApp.

The product described in this manual may be protected by one or more U.S. patents, foreign patents, or pending applications.

LIMITED RIGHTS LEGEND: Use, duplication, or disclosure by the government is subject to restrictions as set forth in subparagraph (b)(3) of the Rights in Technical Data -Noncommercial Items at DFARS 252.227-7013 (FEB 2014) and FAR 52.227-19 (DEC 2007).

Data contained herein pertains to a commercial product and/or commercial service (as defined in FAR 2.101) and is proprietary to NetApp, Inc. All NetApp technical data and computer software provided under this Agreement is commercial in nature and developed solely at private expense. The U.S. Government has a non-exclusive, non-transferrable, nonsublicensable, worldwide, limited irrevocable license to use the Data only in connection with and in support of the U.S. Government contract under which the Data was delivered. Except as provided herein, the Data may not be used, disclosed, reproduced, modified, performed, or displayed without the prior written approval of NetApp, Inc. United States Government license rights for the Department of Defense are limited to those rights identified in DFARS clause 252.227-7015(b) (FEB 2014).

Trademark information

NETAPP, the NETAPP logo, and the marks listed at http://www.netapp.com/TM are trademarks of NetApp, Inc. Other company and product names may be trademarks of their respective owners.