Install and setup

Install and maintain

NetApp
March 22, 2024

This PDF was generated from https://docs.netapp.com/us-en/ontap-systems/fas8300/install-setup.html on March 22, 2024. Always check docs.netapp.com for the latest.

Table of Contents

Install and setup . . . 1
Start here: Choose your installation and setup experience . . . 1
Quick guide - FAS8300 and FAS8700 . . . 1
Video steps - FAS8300 and FAS8700 . . . 1
Detailed guide - FAS8300 and FAS8700 . . . 1

Install and setup

Start here: Choose your installation and setup experience

For most configurations, you can choose from different content formats.

- Quick steps

  A printable PDF of step-by-step instructions with live links to additional content.

- Video steps

  Video step-by-step instructions.

- Detailed steps

  Online step-by-step instructions with live links to additional content.

For MetroCluster configurations, see either:

- Install MetroCluster IP configuration
- Install MetroCluster Fabric-Attached configuration

Quick guide - FAS8300 and FAS8700

This guide gives graphic instructions for a typical installation of your system from racking and cabling, through initial system bring-up. Use this guide if you are familiar with installing NetApp systems.

Access the *Installation and Setup Instructions* PDF poster:

FAS8300 and FAS8700 Installation and Setup Instructions

Video steps - FAS8300 and FAS8700

The following video shows how to install and cable your new system.

Animation - FAS8300 and FAS8700 Install and setup instructions

Detailed guide - FAS8300 and FAS8700

This guide gives detailed step-by-step instructions for installing a typical NetApp system. Use this guide if you want more detailed installation instructions.

Step 1: Prepare for installation

To install your system, you need to create an account, register the system, and get license keys. You also need to inventory the appropriate number and type of cables for your system and collect specific network information.

You need to have access to the Hardware Universe for information about site requirements as well as additional information on your configured system. You might also want to have access to the Release Notes for your version of ONTAP for more information about this system.

NetApp Hardware Universe

Find the Release Notes for your version of ONTAP 9

You need to provide the following at your site:

- Rack space for the storage system
- Phillips #2 screwdriver
- Additional networking cables to connect your system to your network switch and laptop or console with a Web browser

Steps

1. Unpack the contents of all boxes.
2. Record the system serial number from the controllers.

3. Inventory and make a note of the number and types of cables you received.

   The following table identifies the types of cables you might receive. If you receive a cable not listed in the table, see the NetApp Hardware Universe to locate the cable and identify its use.

Type of cable…	Part number and length	Connector type	For…
100 GbE cable (QSF(28)	X66211A-05 (112-00595), 0.5m X66211A-1 (112-00573), 1m X66211A-2 (112-00574), 2m X66211A-5 (112-00574), 5m		Storage, cluster interconnect/HA, and Ethernet data (order-dependent)
25 GbE cable (SFP28s)	X66240-2 (112-00598), 2m X66240-5 (112-00639), 5m		GbE network connection (order-dependent)
32 Gb FC (SFP+ Op)	X66250-2 (112-00342), 2m X66250-5 (112-00344), 5m X66250-15 (112-00346), 15m		FC network connection

Type of cable…	Part number and length	Connector type	For…
Storage Cables	X66030A (112-00435), .5m X66031A (112-00436), 1m X66032A (112-00437), 2m X66033A (112-00438), 3m		mini-SAS HD to mini-SAS HD cables (order-dependent)
Optical cables	X66250-2-N-C (112-00342)		16 Gb FC or 25GbE cables for mezzanine cards (order-dependent)
RJ-45 (order dependent)	X6585-R6 (112-00291), 3m X6562-R6 (112-00196), 5m		Management network
Micro-USB console cable	Not applicable		Console connection used during software setup if laptop or console does not support network discovery.
Power cables	Not applicable		Powering up the system

4. Review the *NetApp ONTAP Confiuration Guide* and collect the required information listed in that guide.

   ONTAP Configuration Guide

Step 2: Install the hardware

You need to install your system in a 4-post rack or NetApp system cabinet, as applicable.

Steps

1. Install the rail kits, as needed.
2. Install and secure your system using the instructions included with the rail kit.

   You need to be aware of the safety concerns associated with the weight of the system.

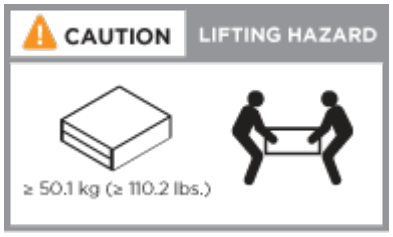

3. Attach cable management devices (as shown).

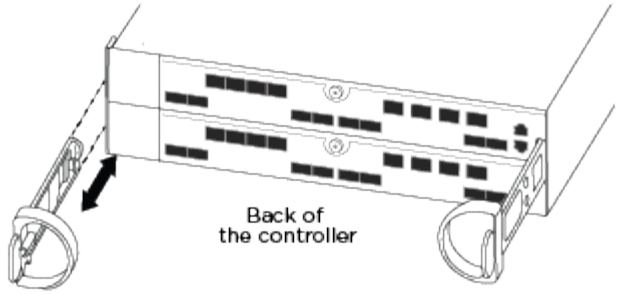

4. Place the bezel on the front of the system.

Step 3: Cable controllers to your network

You can cable the controllers to your network by using the two-node switchless cluster method or by using the cluster interconnect network.

> If the port labels on the card are not visible, check the card installation orientation (the PCIe connector socket is on the left side of the card slot in the A400 and FAS8300/8700), and then look for the card,then look for the card, by part number, in the NetApp Hardware Universe for a graphic of the bezel which will show the port labels. The card part number can be found using the `sysconfig -a` command or on the system packing list.

Option 1: Cable a two-node switchless cluster

The optional data ports, optional NIC cards, and management ports on the controller modules are connected to switches. The cluster interconnect and HA ports are cabled on both controller modules.

You must have contacted your network administrator for information about connecting the system to the switches.

Be sure to check the direction of the cable pull-tabs when inserting the cables in the ports. Cable pull-tabs are up for all onboard ports and down for expansion (NIC) cards.

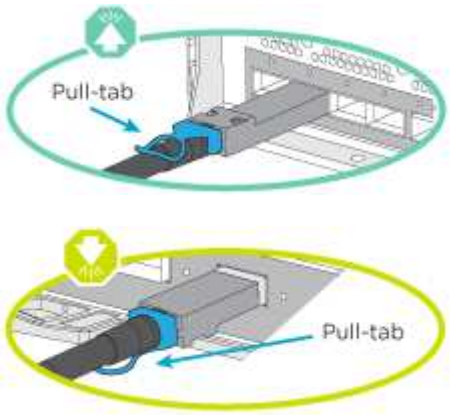

> As you insert the connector, you should feel it click into place; if you do not feel it click, remove it, turn it around and try again.

Steps

1. Use the animation or illustration to complete the cabling between the controllers and to the switches:

Animation - Two-node switchless cluster cabling

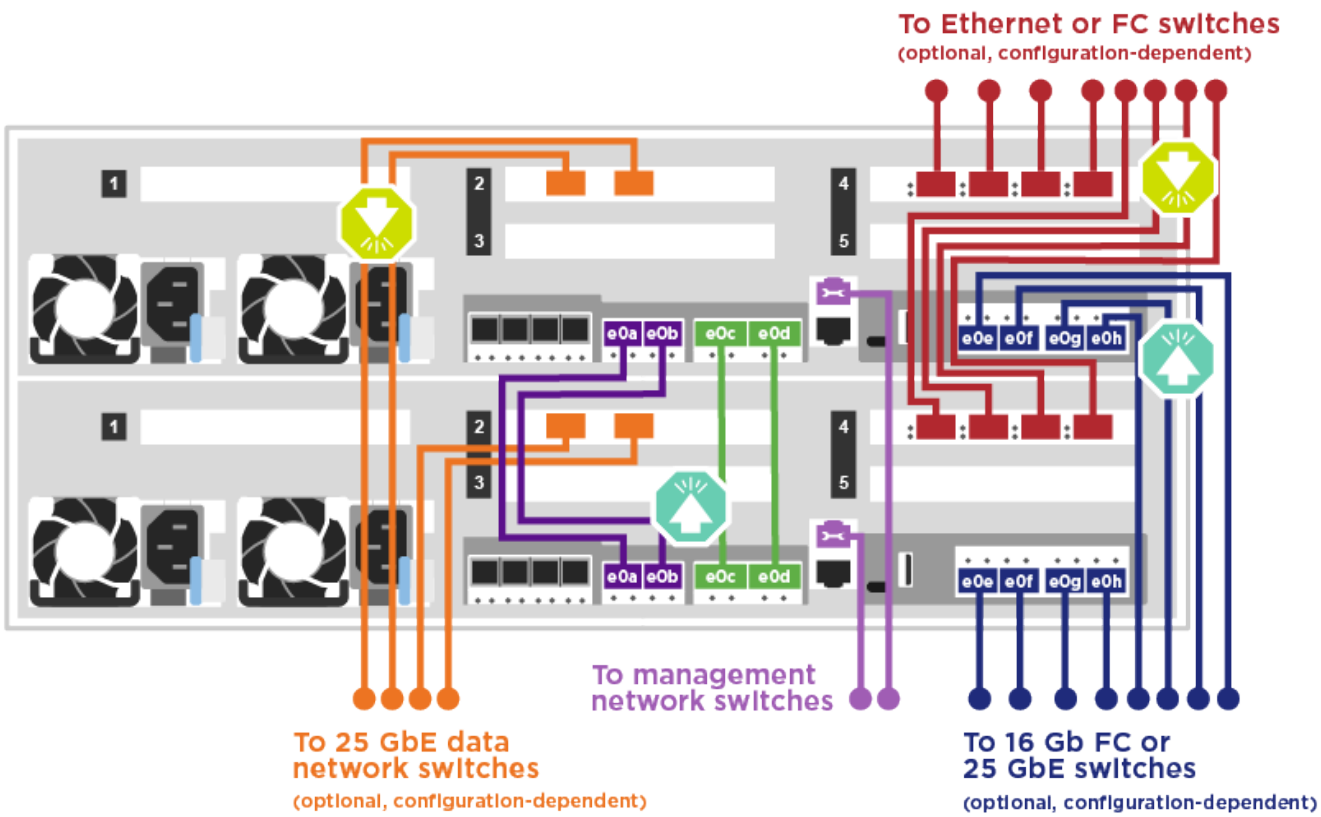

2. Go to Step 4: Cable controllers to drive shelves for drive shelf cabling instructions.

Option 2: Cable a switched cluster

The optional data ports, optional NIC cards, mezzanine cards, and management ports on the controller modules are connected to switches. The cluster interconnect and HA ports are cabled on to the cluster/HA switch.

You must have contacted your network administrator for information about connecting the system to the switches.

Be sure to check the direction of the cable pull-tabs when inserting the cables in the ports. Cable pull-tabs are up for all onboard ports and down for expansion (NIC) cards.

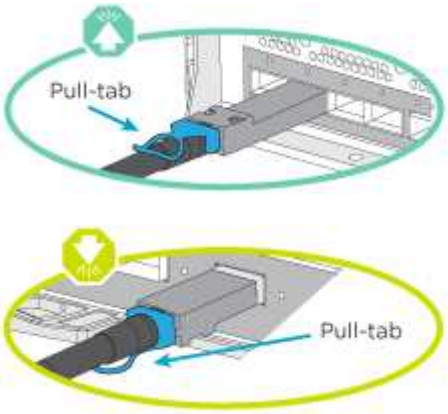

As you insert the connector, you should feel it click into place; if you do not feel it click, remove it, turn it around and try again.

Steps

1. Use the animation or illustration to complete the cabling between the controllers and to the switches:

   Animation - Switched cluster cabling

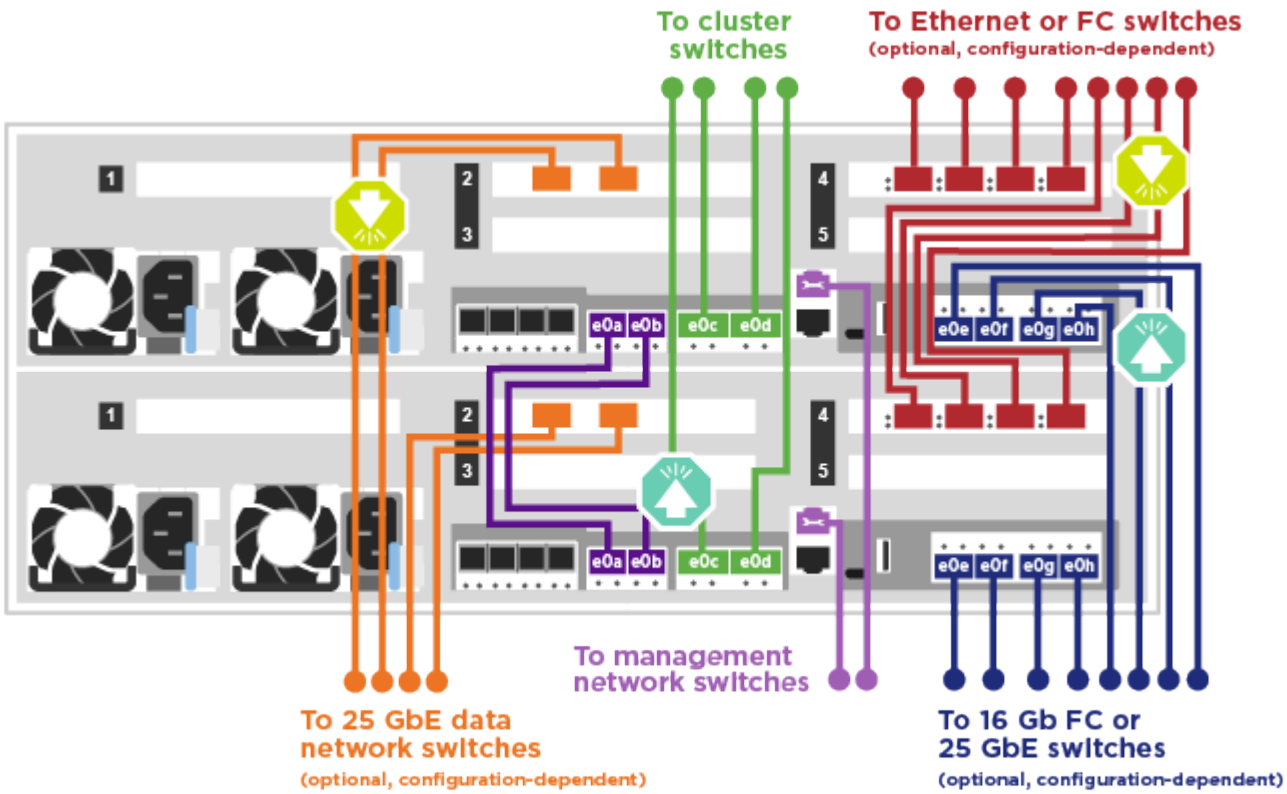

2. Go to Step 4: Cable controllers to drive shelves for drive shelf cabling instructions.

Step 4: Cable controllers to drive shelves

Option 1: Cable the controllers to SAS drive shelves

You must cable each controller to the IOM modules on both SAS drive shelves.

Be sure to check the illustration arrow for the proper cable connector pull-tab orientation. The cable pull-tab for the DS224-C are down.

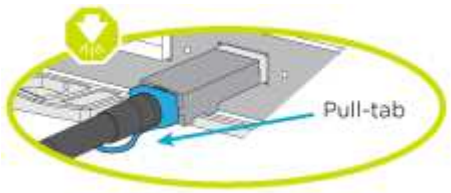

As you insert the connector, you should feel it click into place; if you do not feel it click, remove it, turn it around and try again.

Steps

1. Use the following animation or illustration to cable your controllers to two drive shelves.

   Animation - Cable the controllers to SAS drive shelves

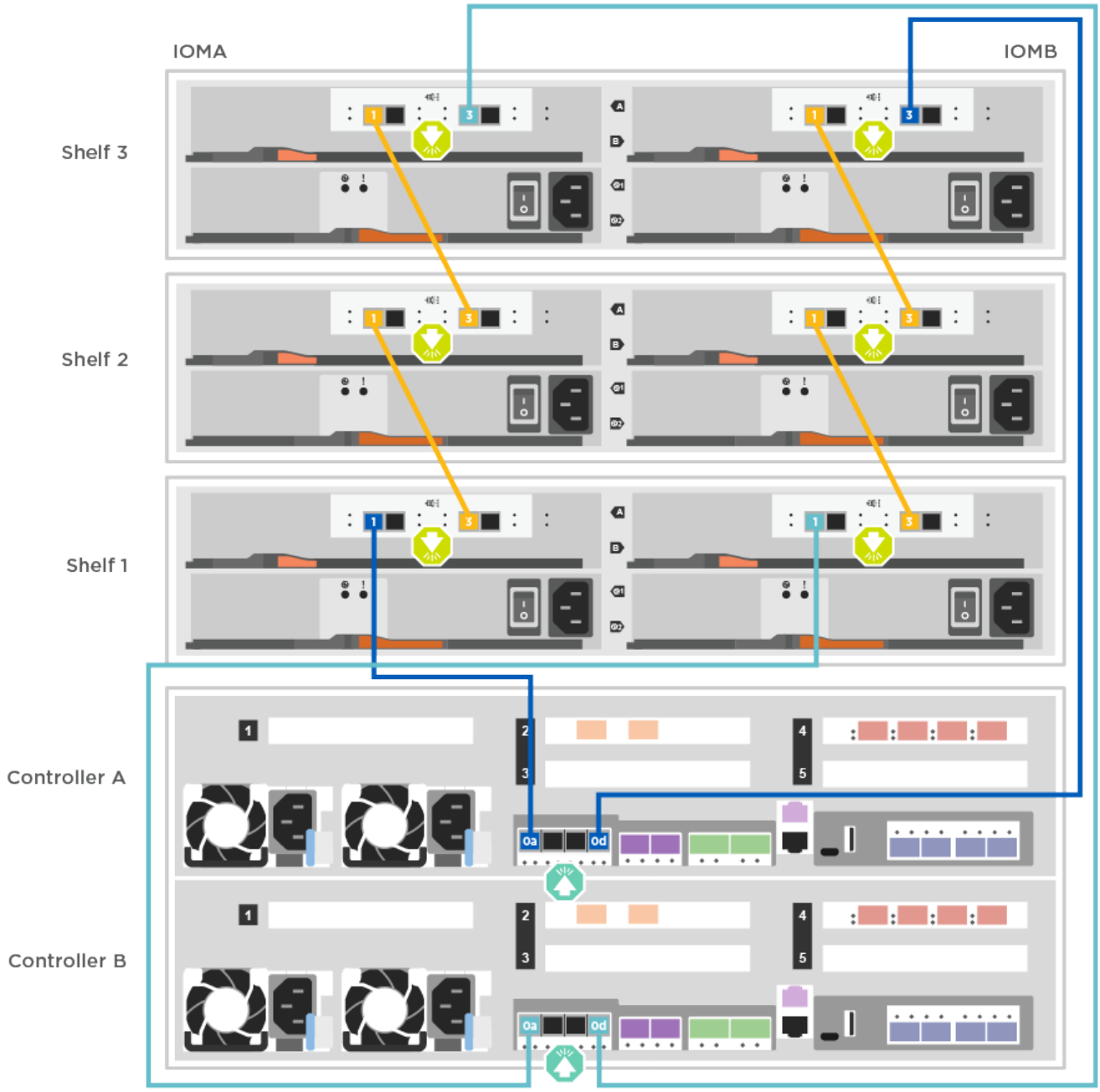

2. Go to Step 5: Complete system setup and configuration to complete system setup and configuration.

Step 5: Complete system setup and configuration

You can complete the system setup and configuration using cluster discovery with only a connection to the switch and laptop, or by connecting directly to a controller in the system and then connecting to the management switch.

Option 1: Completing system setup and configuration if network discovery is enabled

If you have network discovery enabled on your laptop, you can complete system setup and configuration using automatic cluster discovery.

Steps

1. Use the following animation to set one or more drive shelf IDs:

   Animation - Set drive shelf IDs

2. Plug the power cords into the controller power supplies, and then connect them to power sources on different circuits.
3. Make sure that your laptop has network discovery enabled.

   See your laptop's online help for more information.

4. Use the following animation to connect your laptop to the Management switch.

   Animation - Connect your laptop to the Management switch

5. Select an ONTAP icon listed to discover:

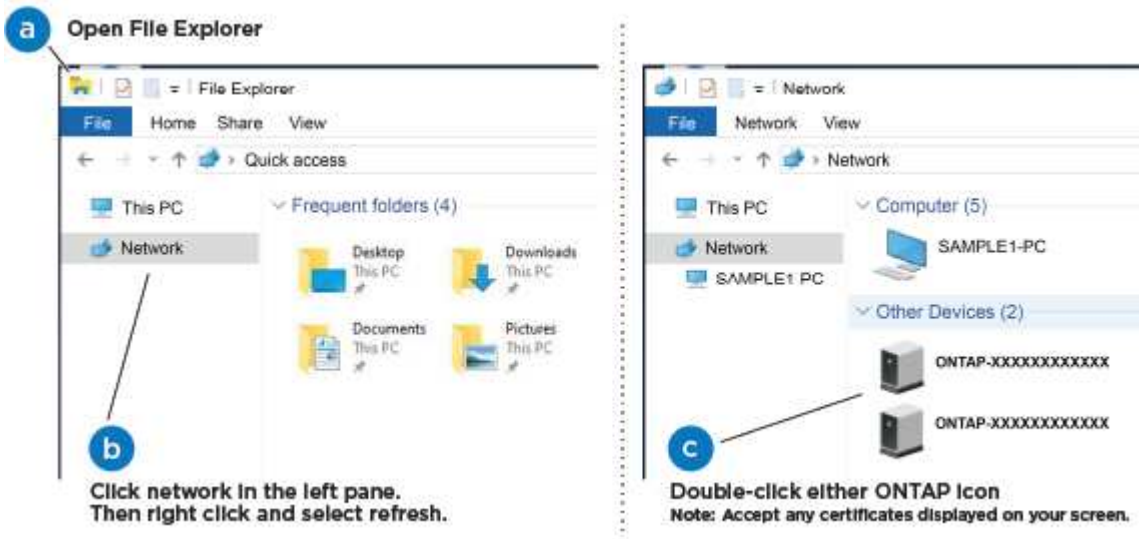

   a. Open File Explorer.
   b. Click network in the left pane.
   c. Right click and select refresh.
   d. Double-click either ONTAP icon and accept any certificates displayed on your screen.

   > XXXXX is the system serial number for the target node.

   System Manager opens.

6. Use System Manager guided setup to configure your system using the data you collected in the *NetApp ONTAP Configuration Guide*.

   ONTAP Configuration Guide

7. Set up your account and download Active IQ Config Advisor:
   a. Log in to your existing account or create an account.

      NetApp Support Registration

   b. Register your system.

      NetApp Product Registration

   c. Download Active IQ Config Advisor.

      NetApp Downloads: Config Advisor

8. Verify the health of your system by running Config Advisor.
9. After you have completed the initial configuration, go to the ONTAP & ONTAP System Manager Documentation Resources page for information about configuring additional features in ONTAP.

Option 2: Completing system setup and configuration if network discovery is not enabled

If network discovery is not enabled on your laptop, you must complete the configuration and setup using this task.

Steps

1. Cable and configure your laptop or console:
   a. Set the console port on the laptop or console to 115,200 baud with N-8-1.

      See your laptop or console's online help for how to configure the console port.

   b. Connect the console cable to the laptop or console using the console cable that came with your system, and then connect the laptop to the management switch on the management subnet .
   c. Assign a TCP/IP address to the laptop or console, using one that is on the management subnet.
2. Use the following animation to set one or more drive shelf IDs:

   Animation - Set drive shelf IDs

3. Plug the power cords into the controller power supplies, and then connect them to power sources on different circuits.

   FAS8300 and FAS8700 shown.

   Animation - Power on the controllers

   Initial booting may take up to eight minutes.

4. Assign an initial node management IP address to one of the nodes.

If the management network has DHCP…	Then…
Configured	Record the IP address assigned to the new controllers.

If the management network has DHCP…	Then…
Not configured	a. Open a console session using PuTTY, a terminal server, or the equivalent for your environment. Check your laptop or console's online help if you do not know how to configure PuTTY. b. Enter the management IP address when prompted by the script.

5. Using System Manager on your laptop or console, configure your cluster:
   a. Point your browser to the node management IP address.

      The format for the address is https://x.x.x.x.

   b. Configure the system using the data you collected in the *NetApp ONTAP Configuration guide*.

      ONTAP Configuration Guide

6. Set up your account and download Active IQ Config Advisor:
   a. Log in to your existing account or create an account.

      NetApp Support Registration

   b. Register your system.

      NetApp Product Registration

   c. Download Active IQ Config Advisor.

      NetApp Downloads: Config Advisor

7. Verify the health of your system by running Config Advisor.
8. After you have completed the initial configuration, go to the ONTAP & ONTAP System Manager Documentation Resources page for information about configuring additional features in ONTAP.

Copyright information

Copyright © 2024 NetApp, Inc. All Rights Reserved. Printed in the U.S. No part of this document covered by copyright may be reproduced in any form or by any means—graphic, electronic, or mechanical, including photocopying, recording, taping, or storage in an electronic retrieval system—without prior written permission of the copyright owner.

Software derived from copyrighted NetApp material is subject to the following license and disclaimer:

THIS SOFTWARE IS PROVIDED BY NETAPP “AS IS” AND WITHOUT ANY EXPRESS OR IMPLIED WARRANTIES, INCLUDING, BUT NOT LIMITED TO, THE IMPLIED WARRANTIES OF MERCHANTABILITY AND FITNESS FOR A PARTICULAR PURPOSE, WHICH ARE HEREBY DISCLAIMED. IN NO EVENT SHALL NETAPP BE LIABLE FOR ANY DIRECT, INDIRECT, INCIDENTAL, SPECIAL, EXEMPLARY, OR CONSEQUENTIAL DAMAGES (INCLUDING, BUT NOT LIMITED TO, PROCUREMENT OF SUBSTITUTE GOODS OR SERVICES; LOSS OF USE, DATA, OR PROFITS; OR BUSINESS INTERRUPTION) HOWEVER CAUSED AND ON ANY THEORY OF LIABILITY, WHETHER IN CONTRACT, STRICT LIABILITY, OR TORT (INCLUDING NEGLIGENCE OR OTHERWISE) ARISING IN ANY WAY OUT OF THE USE OF THIS SOFTWARE, EVEN IF ADVISED OF THE POSSIBILITY OF SUCH DAMAGE.

NetApp reserves the right to change any products described herein at any time, and without notice. NetApp assumes no responsibility or liability arising from the use of products described herein, except as expressly agreed to in writing by NetApp. The use or purchase of this product does not convey a license under any patent rights, trademark rights, or any other intellectual property rights of NetApp.

The product described in this manual may be protected by one or more U.S. patents, foreign patents, or pending applications.

LIMITED RIGHTS LEGEND: Use, duplication, or disclosure by the government is subject to restrictions as set forth in subparagraph (b)(3) of the Rights in Technical Data -Noncommercial Items at DFARS 252.227-7013 (FEB 2014) and FAR 52.227-19 (DEC 2007).

Data contained herein pertains to a commercial product and/or commercial service (as defined in FAR 2.101) and is proprietary to NetApp, Inc. All NetApp technical data and computer software provided under this Agreement is commercial in nature and developed solely at private expense. The U.S. Government has a non-exclusive, non-transferrable, nonsublicensable, worldwide, limited irrevocable license to use the Data only in connection with and in support of the U.S. Government contract under which the Data was delivered. Except as provided herein, the Data may not be used, disclosed, reproduced, modified, performed, or displayed without the prior written approval of NetApp, Inc. United States Government license rights for the Department of Defense are limited to those rights identified in DFARS clause 252.227-7015(b) (FEB 2014).

Trademark information

NETAPP, the NETAPP logo, and the marks listed at http://www.netapp.com/TM are trademarks of NetApp, Inc. Other company and product names may be trademarks of their respective owners.