Boot media

Install and maintain

NetApp
March 22, 2024

This PDF was generated from https://docs.netapp.com/us-en/ontap-systems/asa250/bootmedia-replace-overview.html on March 22, 2024. Always check docs.netapp.com for the latest.

Table of Contents

Boot media . . . 1
Overview and requirements ASA A250 . . . 1
Check onboard encryption keys - ASA A250 . . . 1
Shut down the controller - ASA A250 . . . 5
Replace the boot media - ASA A250 . . . 6
Boot the recovery image - ASA A250 . . . 14

Boot media

Overview and requirements ASA A250

The boot media stores a primary and secondary set of system (boot image) files that the system uses when it boots.

Before you begin

- You must have a USB flash drive, formatted to MBR/FAT32, with the appropriate amount of storage to hold the `image_xxx.tgz` file.
- You also must copy the `image_xxx.tgz` file to the USB flash drive for later use in this procedure.

About this task

- The nondisruptive and disruptive methods for replacing a boot media both require you to restore the `var` file system:
  - For nondisruptive replacement, the HA pair must be connected to a network to restore the `var` file system.
  - For disruptive replacement, you do not need a network connection to restore the `var` file system, but the process requires two reboots.
- You must replace the failed component with a replacement FRU component you received from your provider.
- It is important that you apply the commands in these steps on the correct controller:
  - The *impaired* node is the controller on which you are performing maintenance.
  - The *healthy* node is the HA partner of the impaired controller.

Check onboard encryption keys - ASA A250

Prior to shutting down the impaired controller and checking the status of the onboard encryption keys, you must check the status of the impaired controller, disable automatic giveback, and check which version of ONTAP is running on the system.

If you have a cluster with more than two nodes, it must be in quorum. If the cluster is not in quorum or a healthy controller shows false for eligibility and health, you must correct the issue before shutting down the impaired controller; see the Synchronize a node with the cluster.

Steps

1. Check the status of the impaired controller:
   - If the impaired controller is at the login prompt, log in as `admin`.
   - If the impaired controller is at the LOADER prompt and is part of HA configuration, log in as `admin` on the healthy controller.
   - If the impaired controller is in a standalone configuration and at LOADER prompt, contact mysupport.netapp.com.
2. If AutoSupport is enabled, suppress automatic case creation by invoking an AutoSupport message:
   `system node autosupport invoke -node * -type all -message MAINT=number_of_hours_downh`

The following AutoSupport message suppresses automatic case creation for two hours: `cluster1:*> system node autosupport invoke -node * -type all -message MAINT=2h`

3. Check the version of ONTAP the system is running on the impaired controller if up, or on the partner controller if the impaired controller is down, using the `version -v` command:
   - If <lno-DARE> or <1Ono-DARE> is displayed in the command output, the system does not support NVE, proceed to shut down the controller.
   - If <lno-DARE> is not displayed in the command output, and the system is running ONTAP 9.6 or later, go to the next section.
4. If the impaired controller is part of an HA configuration, disable automatic giveback from the healthy controller: `storage failover modify -node local -auto-giveback false` or `storage failover modify -node local -auto-giveback-after-panic false`

Check NVE or NSE on systems running ONTAP 9.6 and later

Before shutting down the impaired controller, you need to verify whether the system has either NetApp Volume Encryption (NVE) or NetApp Storage Encryption (NSE) enabled. If so, you need to verify the configuration.

1. Verify whether NVE is in use for any volumes in the cluster: `volume show -is-encrypted true`

   If any volumes are listed in the output, NVE is configured and you need to verify the NVE configuration. If no volumes are listed, check whether NSE is configured and in use.

2. Verify whether NSE is configured and in use: `storage encryption disk show`
   - If the command output lists the drive details with Mode & Key ID information, NSE is configured and you need to verify the NSE configuration and in use.
   - If no disks are shown, NSE is not configured.
   - If NVE and NSE are not configured, no drives are protected with NSE keys, it's safe to shut down the impaired controller.

Verify NVE configuration

1. Display the key IDs of the authentication keys that are stored on the key management servers: `security key-manager key query`

   > After the ONTAP 9.6 release, you may have additional key manager types. The types are `KMIP`, `AKV`, and `GCP`. The process for confirming these types is the same as confirming `external` or `onboard` key manager types.

   - If the `Key Manager` type displays `external` and the `Restored` column displays `yes`, it's safe to shut down the impaired controller.
   - If the `Key Manager` type displays `onboard` and the `Restored` column displays `yes`, you need to complete some additional steps.
   - If the `Key Manager` type displays `external` and the `Restored` column displays anything other than `yes`, you need to complete some additional steps.
   - If the `Key Manager` type displays `onboard` and the `Restored` column displays anything other than `yes`, you need to complete some additional steps.

2. If the `Key Manager` type displays `onboard` and the `Restored` column displays `yes`, manually back up the OKM information:
   a. Go to advanced privilege mode and enter `y` when prompted to continue: `set -priv advanced`
   b. Enter the command to display the key management information: `security key-manager onboard show-backup`
   c. Copy the contents of the backup information to a separate file or your log file. You'll need it in disaster scenarios where you might need to manually recover OKM.
   d. Return to admin mode: `set -priv admin`
   e. Shut down the impaired controller.
3. If the `Key Manager` type displays `external` and the `Restored` column displays anything other than `yes`:
   a. Restore the external key management authentication keys to all nodes in the cluster: `security key-manager external restore`

      If the command fails, contact NetApp Support.

      mysupport.netapp.com

   b. Verify that the `Restored` column equals `yes` for all authentication keys: `security key-manager key query`
   c. Shut down the impaired controller.
4. If the `Key Manager` type displays `onboard` and the `Restored` column displays anything other than `yes`:
   a. Enter the onboard security key-manager sync command: `security key-manager onboard sync`

      > Enter the customer's 32 character, alphanumeric onboard key management passphrase at the prompt. If the passphrase cannot be provided, contact NetApp Support. mysupport.netapp.com

   b. Verify the `Restored` column shows `yes` for all authentication keys: `security key-manager key query`
   c. Verify that the `Key Manager` type shows `onboard`, and then manually back up the OKM information.
   d. Go to advanced privilege mode and enter `y` when prompted to continue: `set -priv advanced`
   e. Enter the command to display the key management backup information: `security key-manager onboard show-backup`
   f. Copy the contents of the backup information to a separate file or your log file. You'll need it in disaster scenarios where you might need to manually recover OKM.
   g. Return to admin mode: `set -priv admin`
   h. You can safely shut down the controller.

Verify NSE configuration

1. Display the key IDs of the authentication keys that are stored on the key management servers: `security key-manager key query -key-type NSE-AK`

> After the ONTAP 9.6 release, you may have additional key manager types. The types are `KMIP`, `AKV`, and `GCP`. The process for confirming these types is the same as confirming `external` or `onboard` key manager types.

- If the `Key Manager` type displays `external` and the `Restored` column displays `yes`, it's safe to shut down the impaired controller.
- If the `Key Manager` type displays `onboard` and the `Restored` column displays `yes`, you need to complete some additional steps.
- If the `Key Manager` type displays `external` and the `Restored` column displays anything other than `yes`, you need to complete some additional steps.
- If the `Key Manager` type displays `external` and the `Restored` column displays anything other than `yes`, you need to complete some additional steps.

2. If the `Key Manager` type displays `onboard` and the `Restored` column displays `yes`, manually back up the OKM information:
   a. Go to advanced privilege mode and enter `y` when prompted to continue: `set -priv advanced`
   b. Enter the command to display the key management information: `security key-manager onboard show-backup`
   c. Copy the contents of the backup information to a separate file or your log file. You'll need it in disaster scenarios where you might need to manually recover OKM.
   d. Return to admin mode: `set -priv admin`
   e. You can safely shut down the controller.
3. If the `Key Manager` type displays `external` and the `Restored` column displays anything other than `yes`:
   a. Restore the external key management authentication keys to all nodes in the cluster: `security key-manager external restore`

      If the command fails, contact NetApp Support.

      mysupport.netapp.com

   b. Verify that the `Restored` column equals `yes` for all authentication keys: `security key-manager key query`
   c. You can safely shut down the controller.
4. If the `Key Manager` type displays `onboard` and the `Restored` column displays anything other than `yes`:
   a. Enter the onboard security key-manager sync command: `security key-manager onboard sync`

      Enter the customer's 32 character, alphanumeric onboard key management passphrase at the prompt. If the passphrase cannot be provided, contact NetApp Support.

      mysupport.netapp.com

   b. Verify the `Restored` column shows `yes` for all authentication keys: `security key-manager key query`
   c. Verify that the `Key Manager` type shows `onboard`, and then manually back up the OKM information.

d. Go to advanced privilege mode and enter `y` when prompted to continue: `set -priv advanced`

e. Enter the command to display the key management backup information: `security key-manager onboard show-backup`

f. Copy the contents of the backup information to a separate file or your log file. You'll need it in disaster scenarios where you might need to manually recover OKM.

g. Return to admin mode: `set -priv admin`

h. You can safely shut down the controller.

Shut down the controller - ASA A250

Shut down or take over the impaired controller using the appropriate procedure for your configuration.

Option 1: Most systems

After completing the NVE or NSE tasks, you need to complete the shutdown of the impaired controller.

Steps

a. Take the impaired controller to the LOADER prompt:

If the impaired controller displays…	Then…
The LOADER prompt	Go to Remove controller module.
`Waiting for giveback…`	Press Ctrl-C, and then respond `y` when prompted.
System prompt or password prompt (enter system password)	Take over or halt the impaired controller from the healthy controller: `storage failover takeover -ofnode impaired_node_name` When the impaired controller shows Waiting for giveback…, press Ctrl-C, and then respond `y`.

b. From the LOADER prompt, enter: `printenv` to capture all boot environmental variables. Save the output to your log file.

> This command may not work if the boot device is corrupted or non-functional.

Option 2: Systems in a MetroCluster

After completing the NVE or NSE tasks, you need to complete the shutdown of the impaired controller.

> Do not use this procedure if your system is in a two-node MetroCluster configuration.

To shut down the impaired controller, you must determine the status of the controller and, if necessary, take over the controller so that the healthy controller continues to serve data from the impaired controller storage.

- If you have a cluster with more than two nodes, it must be in quorum. If the cluster is not in quorum or a healthy controller shows false for eligibility and health, you must correct the issue before shutting down the impaired controller; see Synchronize a node with the cluster.
- If you have a MetroCluster configuration, you must have confirmed that the MetroCluster Configuration State is configured and that the nodes are in an enabled and normal state (`metrocluster node show`).

Steps

1. If AutoSupport is enabled, suppress automatic case creation by invoking an AutoSupport message: `system node autosupport invoke -node * -type all -message MAINT=number_of_hours_downh`

   The following AutoSupport message suppresses automatic case creation for two hours: `cluster1:*> system node autosupport invoke -node * -type all -message MAINT=2h`

2. Disable automatic giveback from the console of the healthy controller: `storage failover modify –node local -auto-giveback false`
3. Take the impaired controller to the LOADER prompt:

If the impaired controller is displaying…	Then…
The LOADER prompt	Go to the next step.
Waiting for giveback…	Press Ctrl-C, and then respond `y` when prompted.
System prompt or password prompt (enter system password)	Take over or halt the impaired controller from the healthy controller: `storage failover takeover -ofnode` *`impaired_node_name`* When the impaired controller shows Waiting for giveback…, press Ctrl-C, and then respond `y`.

Replace the boot media - ASA A250

To replace the boot media, you must remove the impaired controller module, install the replacement boot media, and transfer the boot image to a USB flash drive.

Step 1: Remove the controller module

To access components inside the controller module, you must first remove the controller module from the system, and then remove the cover on the controller module.

Steps

1. If you are not already grounded, properly ground yourself.
2. Unplug the controller module power supplies from the source.
3. Release the power cable retainers, and then unplug the cables from the power supplies.
4. Insert your forefinger into the latching mechanism on either side of the controller module, press the lever

with your thumb, and gently pull the controller a few inches out of the chassis.

> If you have difficulty removing the controller module, place your index fingers through the finger holes from the inside (by crossing your arms).

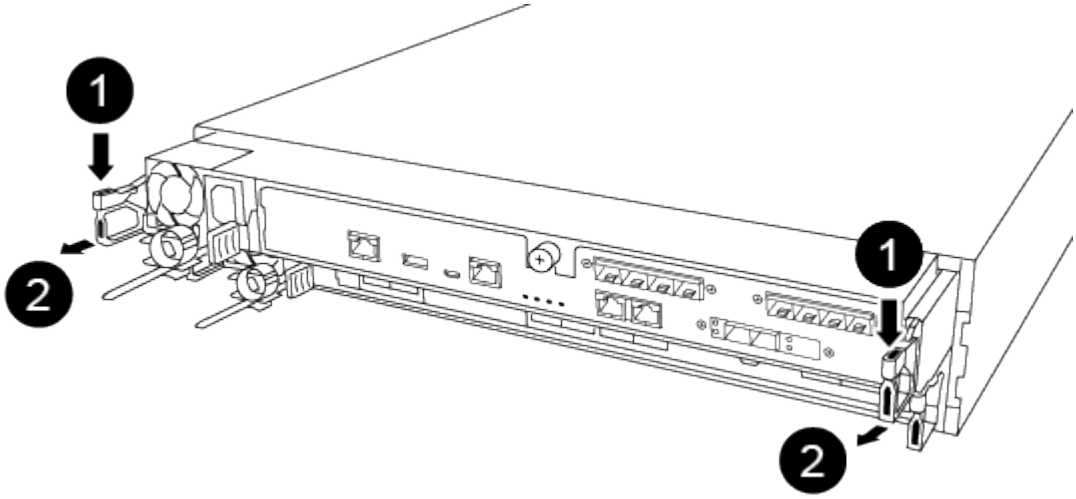

1	Lever
2	Latching mechanism

5. Using both hands, grasp the controller module sides and gently pull it out of the chassis and set it on a flat, stable surface.
6. Turn the thumbscrew on the front of the controller module anti-clockwise and open the controller module cover.

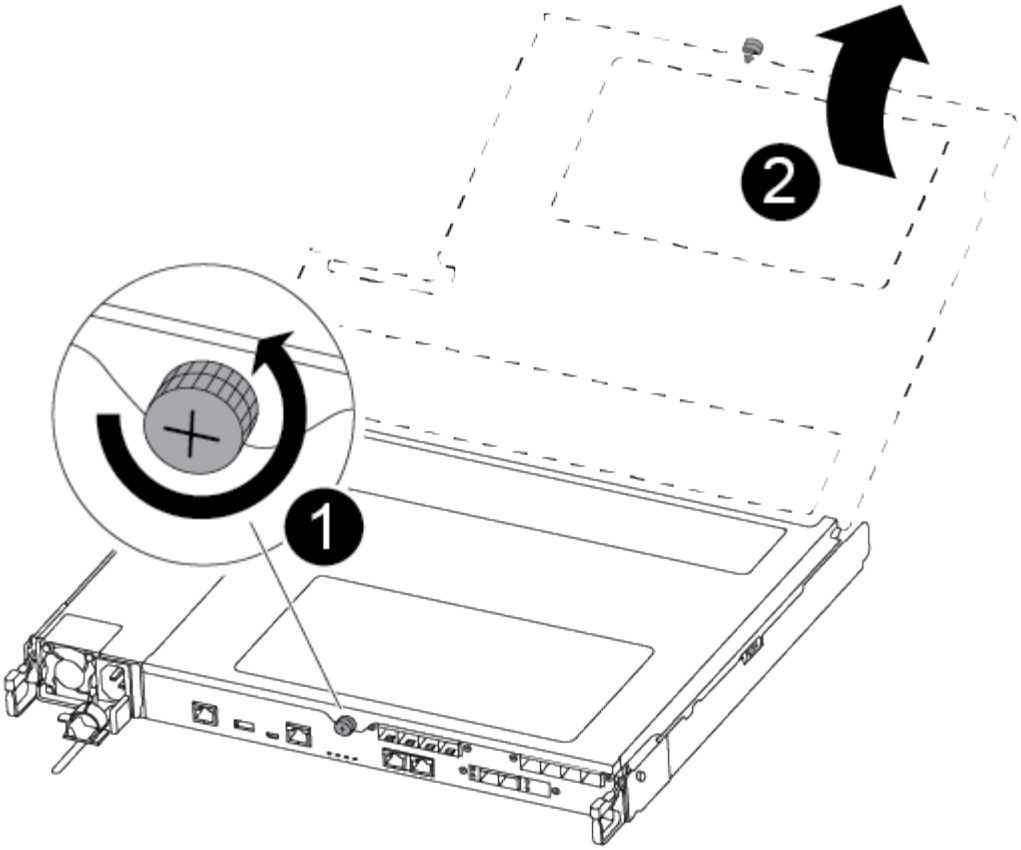

1	Thumbscrew
2	Controller module cover.

7. Lift out the air duct cover.

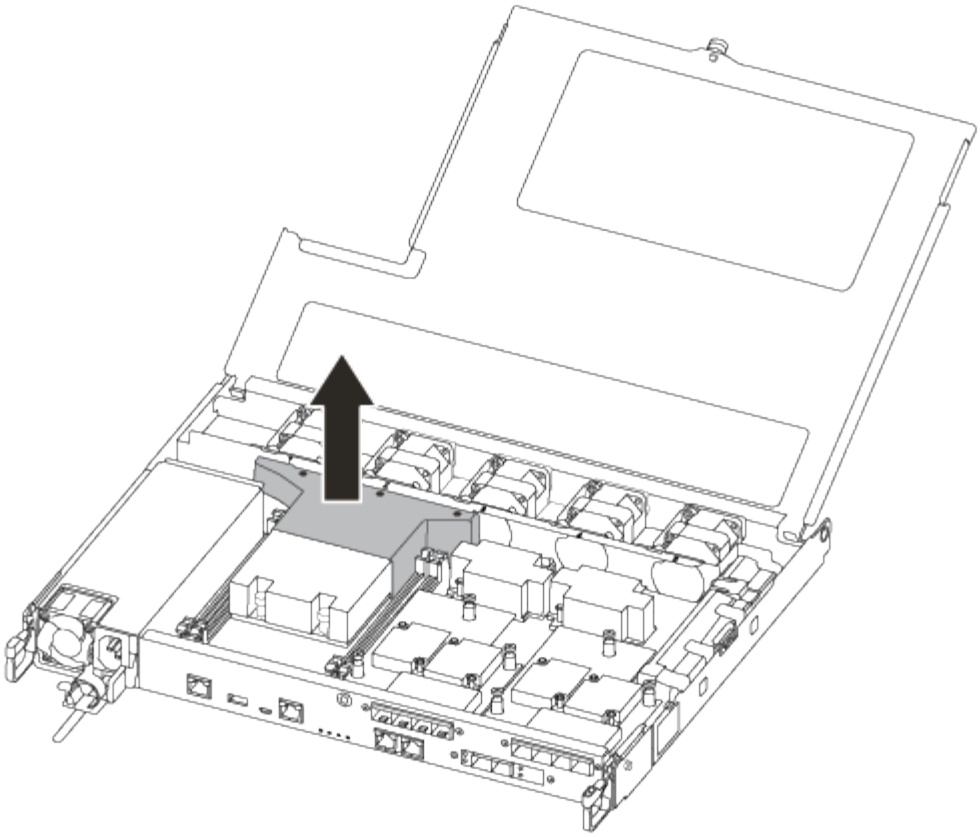

Step 2: Replace the boot media

You locate the failed boot media in the controller module by removing the air duct on the controller module before you can replace the boot media.

You need a #1 magnetic Phillips head screwdriver to remove the screw that holds the boot media in place. Due to the space constraints within the controller module, you should also have a magnet to transfer the screw on to so that you do not lose it.

You can use the following video or the tabulated steps to replace the boot media:

Animation - Replace the boot media

1. Locate and replace the impaired boot media from the controller module.

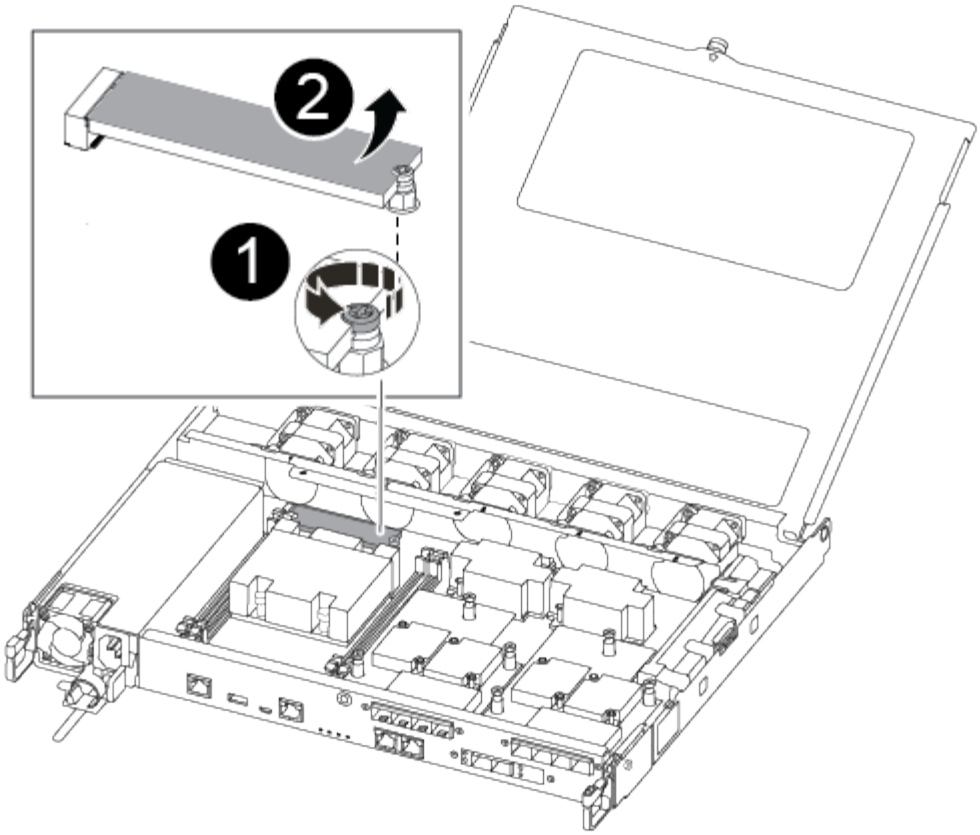

1	Remove the screw securing the boot media to the motherboard in the controller module.
2	Lift the boot media out of the controller module.

2. Using the #1 magnetic screwdriver, remove the screw from the impaired boot media, and set it aside safely on the magnet.
3. Gently lift the impaired boot media directly out of the socket and set it aside.
4. Remove the replacement boot media from the antistatic shipping bag and align it into place on the controller module.
5. Using the #1 magnetic screwdriver, insert and tighten the screw on the boot media.

> Do not apply force when tightening the screw on the boot media; you might crack it.

Step 3: Transfer the boot image to the boot media

The replacement boot media that you installed is without a boot image so you need to transfer a boot image using a USB flash drive.

- You must have a USB flash drive, formatted to MBR/FAT32, with at least 4GB capacity
- A copy of the same image version of ONTAP as what the impaired controller was running. You can download the appropriate image from the Downloads section on the NetApp Support Site

    - If NVE is enabled, download the image with NetApp Volume Encryption, as indicated in the download button.
    - If NVE is not enabled, download the image without NetApp Volume Encryption, as indicated in the download button.
- If your system is an HA pair, you must have a network connection.
- If your system is a stand-alone system you do not need a network connection, but you must perform an additional reboot when restoring the var file system.

1. Download and copy the appropriate service image from the NetApp Support Site to the USB flash drive.
2. Download the service image to your work space on your laptop.
3. Unzip the service image.

   > If you are extracting the contents using Windows, do not use winzip to extract the netboot image. Use another extraction tool, such as 7-Zip or WinRAR.

   There are two folders in the unzipped service image file:

   - boot
   - efi
4. Copy the efi folder to the top directory on the USB flash drive.

   The USB flash drive should have the efi folder and the same Service Image (BIOS) version of what the impaired controller is running.
5. Remove the USB flash drive from your laptop.
6. If you have not already done so, install the air duct.

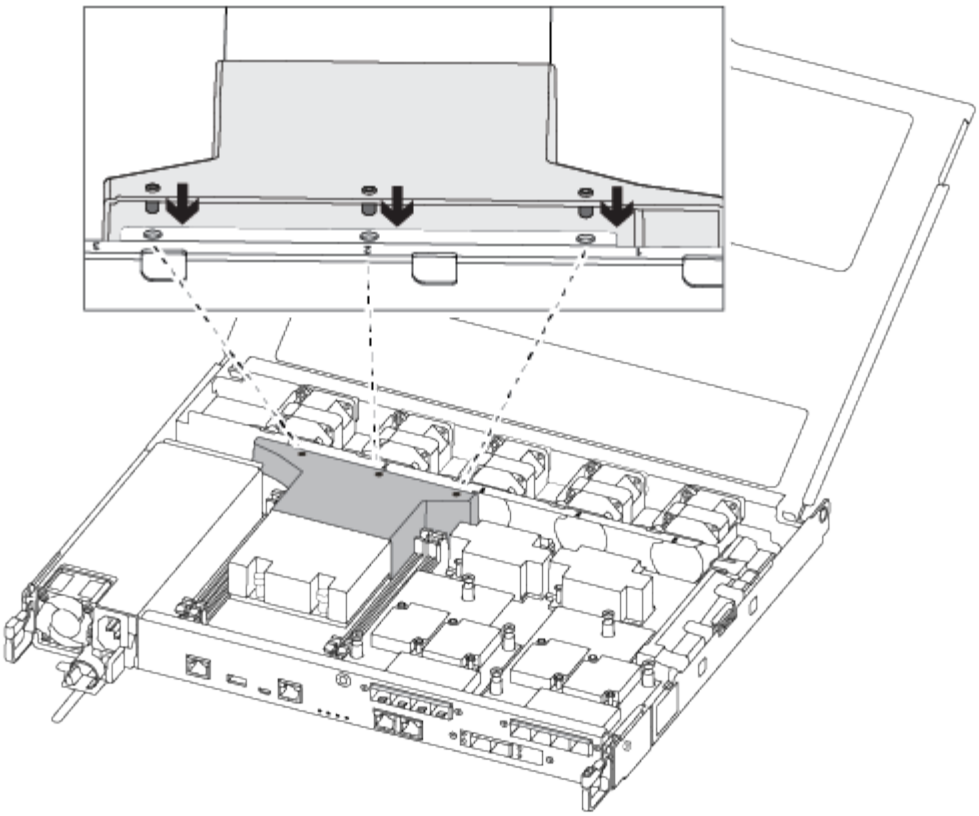

7. Close the controller module cover and tighten the thumbscrew.

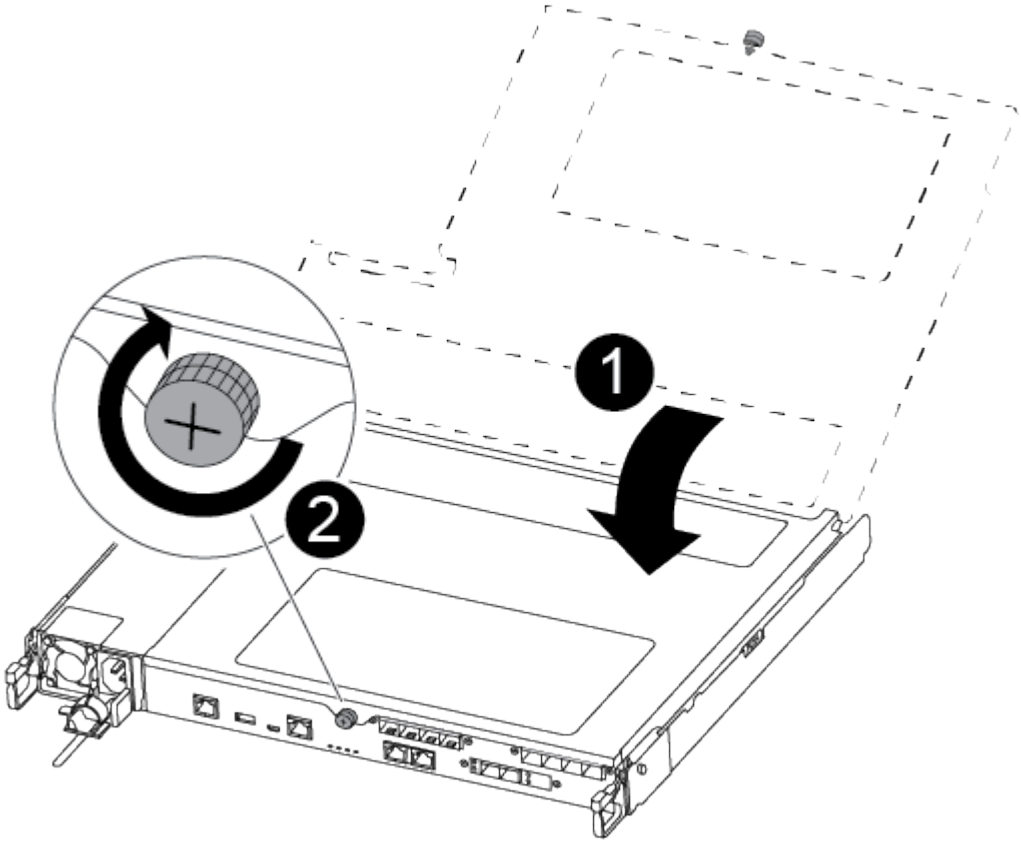

❶	Controller module cover
❷	Thumbscrew

8. Align the end of the controller module with the opening in the chassis, and then gently push the controller module halfway into the system.
9. Plug the power cable into the power supply and reinstall the power cable retainer.
10. Insert the USB flash drive into the USB slot on the controller module.

    Make sure that you install the USB flash drive in the slot labeled for USB devices, and not in the USB console port.

11. Push the controller module all the way into the chassis:
12. Place your index fingers through the finger holes from the inside of the latching mechanism.
13. Press your thumbs down on the orange tabs on top of the latching mechanism and gently push the controller module over the stop.
14. Release your thumbs from the top of the latching mechanisms and continue pushing until the latching mechanisms snap into place.

    The controller module begins to boot as soon as it is fully seated in the chassis. Be prepared to interrupt the boot process.

    The controller module should be fully inserted and flush with the edges of the chassis.

15. Interrupt the boot process to stop at the LOADER prompt by pressing Ctrl-C when you see Starting AUTOBOOT press Ctrl-C to abort….

    If you miss this message, press Ctrl-C, select the option to boot to Maintenance mode, and then halt the controller to boot to LOADER.

16. For systems with one controller in the chassis, reconnect the power and turn on the power supplies.

    The system begins to boot and stops at the LOADER prompt.

17. Set your network connection type at the LOADER prompt:
    - If you are configuring DHCP: `ifconfig e0a -auto`

      > The target port you configure is the target port you use to communicate with the impaired controller from the healthy controller during var file system restore with a network connection. You can also use the e0M port in this command.

    - If you are configuring manual connections: `ifconfig e0a -addr=filer_addr -mask=netmask -gw=gateway-dns=dns_addr-domain=dns_domain`
      - `filer_addr` is the IP address of the storage system.
      - `netmask` is the network mask of the management network that is connected to the HA partner.
      - `gateway` is the gateway for the network.

- `dns_addr` is the IP address of a name server on your network.
- `dns_domain` is the Domain Name System (DNS) domain name.

  If you use this optional parameter, you do not need a fully qualified domain name in the netboot server URL. You need only the server's host name.

> Other parameters might be necessary for your interface. You can enter `help ifconfig` at the firmware prompt for details.

Boot the recovery image - ASA A250

You must boot the ONTAP image from the USB drive, restore the file system, and verify the environmental variables.

1. From the LOADER prompt, boot the recovery image from the USB flash drive: `boot_recovery`

   The image is downloaded from the USB flash drive.

2. When prompted, either enter the name of the image or accept the default image displayed inside the brackets on your screen.
3. Restore the `var` file system:

If your system has…	Then…
A network connection	a. Press `y` when prompted to restore the backup configuration. b. Set the healthy controller to advanced privilege level: `set -privilege advanced` c. Run the restore backup command: `system node restore-backup -node local -target-address` *`impaired_node_IP_address`* d. Return the controller to admin level: `set -privilege admin` e. Press `y` when prompted to use the restored configuration. f. Press `y` when prompted to reboot the controller.
No network connection	a. Press `n` when prompted to restore the backup configuration. b. Reboot the system when prompted by the system. c. Select the **Update flash from backup config** (sync flash) option from the displayed menu. If you are prompted to continue with the update, press `y`.

If your system has…	Then…

No network connection and is in a MetroCluster IP configuration	a. Press `n` when prompted to restore the backup configuration.
	b. Reboot the system when prompted by the system.
	c. Wait for the iSCSI storage connections to connect.
	You can proceed after you see the following messages:
	`date-and-time [node-name:iscsi.session.stateChanged:notice]: iSCSI session state is changed to Connected for the target iSCSI-target (type: dr_auxiliary, address: ip-address).`
	`date-and-time [node-name:iscsi.session.stateChanged:notice]: iSCSI session state is changed to Connected for the target iSCSI-target (type: dr_partner, address: ip-address).`
	`date-and-time [node-name:iscsi.session.stateChanged:notice]: iSCSI session state is changed to Connected for the target iSCSI-target (type: dr_auxiliary, address: ip-address).`
	`date-and-time [node-name:iscsi.session.stateChanged:notice]: iSCSI session state is changed to Connected for the target iSCSI-target (type: dr_partner, address: ip-address).`
	d. Select the **Update flash from backup config** (sync flash) option from the displayed menu.
	If you are prompted to continue with the update, press `y`.

4. Ensure that the environmental variables are set as expected:
   a. Take the controller to the LOADER prompt.
   b. Check the environment variable settings with the `printenv` command.
   c. If an environment variable is not set as expected, modify it with the `setenvenvironment_variable_name changed_value` command.
   d. Save your changes using the `saveenv` command.
5. The next depends on your system configuration:
   - If your system has onboard keymanager, NSE or NVE configured, go to Restore OKM, NSE, and NVE as needed

- If your system does not have onboard keymanager, NSE or NVE configured, complete the steps in this section.

6. From the LOADER prompt, enter the `boot_ontap` command.

If you see…	Then…
The login prompt	Go to the next Step.
Waiting for giveback…	a. Log into the partner controller. b. Confirm the target controller is ready for giveback with the `storage failover show` command.

7. Connect the console cable to the partner controller.
8. Give back the controller using the `storage failover giveback -fromnode local` command.
9. At the cluster prompt, check the logical interfaces with the `net int -is-home false` command.

   If any interfaces are listed as "false", revert those interfaces back to their home port using the `net int revert` command.

10. Move the console cable to the repaired controller and run the `version -v` command to check the ONTAP versions.
11. Restore automatic giveback if you disabled it by using the `storage failover modify -node local -auto-giveback true` command.

You must boot the ONTAP image from the USB drive, restore the file system, and verify the environmental variables.

1. From the LOADER prompt, boot the recovery image from the USB flash drive: `boot_recovery`

   The image is downloaded from the USB flash drive.

2. When prompted, either enter the name of the image or accept the default image displayed inside the brackets on your screen.
3. Restore the `var` file system:

If your system has…	Then…
A network connection	a. Press `y` when prompted to restore the backup configuration. b. Set the healthy controller to advanced privilege level: `set -privilege advanced` c. Run the restore backup command: `system node restore-backup -node local -target-address` *`impaired_node_IP_address`* d. Return the controller to admin level: `set -privilege admin` e. Press `y` when prompted to use the restored configuration. f. Press `y` when prompted to reboot the controller.
No network connection	a. Press `n` when prompted to restore the backup configuration. b. Reboot the system when prompted by the system. c. Select the **Update flash from backup config** (sync flash) option from the displayed menu. If you are prompted to continue with the update, press `y`.

If your system has…	Then…

No network connection and is in a MetroCluster IP configuration	a. Press `n` when prompted to restore the backup configuration.
	b. Reboot the system when prompted by the system.
	c. Wait for the iSCSI storage connections to connect.
	
	You can proceed after you see the following messages:
	
	`date-and-time [node-name:iscsi.session.stateChanged:notice]: iSCSI session state is changed to Connected for the target iSCSI-target (type: dr_auxiliary, address: ip-address).`
	`date-and-time [node-name:iscsi.session.stateChanged:notice]: iSCSI session state is changed to Connected for the target iSCSI-target (type: dr_partner, address: ip-address).`
	`date-and-time [node-name:iscsi.session.stateChanged:notice]: iSCSI session state is changed to Connected for the target iSCSI-target (type: dr_auxiliary, address: ip-address).`
	`date-and-time [node-name:iscsi.session.stateChanged:notice]: iSCSI session state is changed to Connected for the target iSCSI-target (type: dr_partner, address: ip-address).`
	
	d. Select the **Update flash from backup config** (sync flash) option from the displayed menu.
	
	If you are prompted to continue with the update, press `y`.

4. Ensure that the environmental variables are set as expected:
   a. Take the controller to the LOADER prompt.
   b. Check the environment variable settings with the `printenv` command.
   c. If an environment variable is not set as expected, modify it with the `setenvenvironment_variable_name changed_value` command.
   d. Save your changes using the `saveenv` command.
5. The next depends on your system configuration:

- If your system has onboard keymanager, NSE or NVE configured, go to Restore OKM, NSE, and NVE as needed
- If your system does not have onboard keymanager, NSE or NVE configured, complete the steps in this section.

6. From the LOADER prompt, enter the `boot_ontap` command.

If you see…	Then…
The login prompt	Go to the next Step.
Waiting for giveback…	a. Log into the partner controller. b. Confirm the target controller is ready for giveback with the `storage failover show` command.

7. Connect the console cable to the partner controller.
8. Give back the controller using the `storage failover giveback -fromnode local` command.
9. At the cluster prompt, check the logical interfaces with the `net int -is-home false` command.

   If any interfaces are listed as "false", revert those interfaces back to their home port using the `net int revert` command.

10. Move the console cable to the repaired controller and run the `version -v` command to check the ONTAP versions.
11. Restore automatic giveback if you disabled it by using the `storage failover modify -node local -auto-giveback true` command.

= Restore OKM, NSE, and NVE as needed - ASA A250 :icons: font :relative_path: ./asa250/ :imagesdir: /tmp/d20240322-10729-1ikdxu2/source/./asa250/../media/

Once environment variables are checked, you must complete steps specific to systems that have Onboard Key Manager (OKM), NetApp Storage Encryption (NSE) or NetApp Volume Encryption (NVE) enabled.

1. Determine which section you should use to restore your OKM, NSE, or NVE configurations: If NSE or NVE are enabled along with Onboard Key Manager you must restore settings you captured at the beginning of this procedure.
   - If NSE or NVE are enabled and Onboard Key Manager is enabled, go to [Restore NVE or NSE when Onboard Key Manager is enabled].
   - If NSE or NVE are enabled for ONTAP 9.6, go to [Restore NSE/NVE on systems running ONTAP 9.6 and later].

== Restore NVE or NSE when Onboard Key Manager is enabled

Steps

1. Connect the console cable to the target controller.
2. Use the `boot_ontap` command at the LOADER prompt to boot the controller.
3. Check the console output:

If the console displays…	Then…
The LOADER prompt	Boot the controller to the boot menu: `boot_ontap menu`
Waiting for giveback….	a. Enter `Ctrl-C` at the prompt b. At the message: Do you wish to halt this node rather than wait [y/n]? , enter: `y` c. At the LOADER prompt, enter the `boot_ontap menu` command.

4. At the Boot Menu, enter the hidden command, `recover_onboard_keymanager` and reply `y` at the prompt
5. Enter the passphrase for the onboard key manager you obtained from the customer at the beginning of this procedure.
6. When prompted to enter the backup data, paste the backup data you captured at the beginning of this procedure, when asked. Paste the output of `security key-manager backup show` OR `security key-manager onboard show-backup` command

   The data is output from either `security key-manager backup show` or `security key-manager onboard show-backup` command.

   Example of backup data:


   ```
   ------------------------BEGIN BACKUP------------------------
   TmV0QXBwIEtleSBCbG9iAAEAAAAEAAAAcAEAAAAAAAADuD+byAAAAACEAAAAAAAAA
   QAAAAAAAAABvOlH0AAAAAMh7qDLRyH1DBz12piVdy9ATSFMT0C0TlYFss4PDjTaV
   dzRYkLd1PhQLxAWJwOIyqSr8qY1SEBgm1IWgE5DLRqkiAAAAAAAAACgAAAAAAAAA
   3WTh7gAAAAAAAAAAAAAAAAIAAAAAAAgAZJEIWvdeHr5RCAvHGclo+wAAAAAAAAAA
   IgAAAAAAAAAoAAAAAAAAAEOTcR0AAAAAAAAAAAAAAAACAAAAAAAJAGr3tJA/
   LRzUQRHwv+1aWvAAAAAAAAAACQAAAAAAAAgAAAAAAAACdhTcvAAAAAJ1PXeBf
   ml4NBsSyV1B4jc4A7cvWEFY6lLG6hc6tbKLAHZuvfQ4rIbYAAAAAAAAAAAAAAAAA
   AAAAAAAAAAAAAAAAAAAAAAAAAAAAAAAAAAAAAAAAAAAAAAAAAAAAAAAAAAAAAAAA
   AAAAAAAAAAAAAAAAAAAAAAAAAAAAAAAAAAAAAAAAAAAAAAAAAAAAAAAAAAAAAAAA
   . . . .
   H4nPQM0nrDRYRa9SCv8AAAAAAAAAAAAAAAAAAAAAAAAAAAAAAAAAAAAAAAAAAAAA
   AAAAAAAAAAAAAAAAAAAAAAAAAAAAAAAAAAAAAAAAAAAAAAAAAAAAAAAAAAAAAAAA
   AAAAAAAA

   ------------------------END BACKUP------------------------
   ```


7. At the Boot Menu select the option for Normal Boot.

   The system boots to Waiting for giveback… prompt.

8. Move the console cable to the partner controller and login as "admin".
9. Confirm the target controller is ready for giveback with the `storage failover show` command.
10. Giveback only the CFO aggregates with the `storage failover giveback -fromnode local`

`-only-cfo-aggregates true` command.

- If the command fails because of a failed disk, physically disengage the failed disk, but leave the disk in the slot until a replacement is received.
- If the command fails because of an open CIFS sessions, check with customer how to close out CIFS sessions.

  > Terminating CIFS can cause loss of data.

- If the command fails because the partner "not ready", wait 5 minutes for the NVMEMs to synchronize.
- If the command fails because of an NDMP, SnapMirror, or SnapVault process, disable the process. See the appropriate Documentation Center for more information.

11. Once the giveback completes, check the failover and giveback status with the `storage failover show` and `storage failover show-giveback` commands.

    Only the CFO aggregates (root aggregate and CFO style data aggregates) will be shown.

12. Move the console cable to the target controller.
    a. If you are running ONTAP 9.6 or later, run the security key-manager onboard sync:
    b. Run the `security key-manager onboard sync` command and then enter the passphrase when prompted.
    c. Enter the `security key-manager key query` command to see a detailed view of all keys stored in the onboard key manager and verify that the `Restored` column = `yes/true` for all authentication keys.

       > If the `Restored` column = anything other than `yes/true`, contact Customer Support.

    d. Wait 10 minutes for the key to synchronize across the cluster.
13. Move the console cable to the partner controller.
14. Give back the target controller using the `storage failover giveback -fromnode local` command.
15. Check the giveback status, 3 minutes after it reports complete, using the `storage failover show` command.

    If giveback is not complete after 20 minutes, contact Customer Support.

16. At the clustershell prompt, enter the `net int show -is-home false` command to list the logical interfaces that are not on their home controller and port.

    If any interfaces are listed as `false`, revert those interfaces back to their home port using the `net int revert -vserver Cluster -lif` *`nodename`* command.

17. Move the console cable to the target controller and run the `version -v` command to check the ONTAP versions.
18. Restore automatic giveback if you disabled it by using the `storage failover modify -node local -auto-giveback true` command.

== Restore NSE/NVE on systems running ONTAP 9.6 and later

Steps

1. Connect the console cable to the target controller.
2. Use the `boot_ontap` command at the LOADER prompt to boot the controller.
3. Check the console output:

If the console displays…	Then…
The login prompt	Go to Step 7.
Waiting for giveback…	a. Log into the partner controller. b. Confirm the target controller is ready for giveback with the `storage failover show` command.

4. Move the console cable to the partner controller and give back the target controller storage using the `storage failover giveback -fromnode local -only-cfo-aggregates true local` command.
   - If the command fails because of a failed disk, physically disengage the failed disk, but leave the disk in the slot until a replacement is received.
   - If the command fails because of an open CIFS sessions, check with customer how to close out CIFS sessions.

     Terminating CIFS can cause loss of data.

   - If the command fails because the partner "not ready", wait 5 minutes for the NVMEMs to synchronize.
   - If the command fails because of an NDMP, SnapMirror, or SnapVault process, disable the process. See the appropriate Documentation Center for more information.
5. Wait 3 minutes and check the failover status with the `storage failover show` command.
6. At the clustershell prompt, enter the `net int show -is-home false` command to list the logical interfaces that are not on their home controller and port.

   If any interfaces are listed as `false`, revert those interfaces back to their home port using the `net int revert -vserver Cluster -lif` *`nodename`* command.
7. Move the console cable to the target controller and run the `version -v` command to check the ONTAP versions.
8. Restore automatic giveback if you disabled it by using the `storage failover modify -node local -auto-giveback true` command.
9. Use the `storage encryption disk show` at the clustershell prompt, to review the output.
10. Use the `security key-manager key query` command to display the key IDs of the authentication keys that are stored on the key management servers.
    - If the `Restored` column = `yes/true`, you are done and can proceed to complete the replacement process.

- If the `Key Manager type` = `external` and the `Restored` column = anything other than `yes/true`, use the `security key-manager external restore` command to restore the key IDs of the authentication keys.

  If the command fails, contact Customer Support.

- If the `Key Manager type` = `onboard` and the `Restored` column = anything other than `yes/true`, use the `security key-manager onboard sync` command to re-sync the Key Manager type.

  Use the `security key-manager key query` command to verify that the `Restored` column = `yes/true` for all authentication keys.

11. Connect the console cable to the partner controller.
12. Give back the controller using the `storage failover giveback -fromnode local` command.
13. Restore automatic giveback if you disabled it by using the `storage failover modify -node local -auto-giveback true` command.

= Return the failed part to NetApp - ASA A250 :icons: font :relative_path: ./asa250/ :imagesdir: /tmp/d20240322-10729-1ikdxu2/source/./asa250/../media/

Return the failed part to NetApp, as described in the RMA instructions shipped with the kit. See the Part Return & Replacements page for further information.

Copyright information

Copyright © 2024 NetApp, Inc. All Rights Reserved. Printed in the U.S. No part of this document covered by copyright may be reproduced in any form or by any means—graphic, electronic, or mechanical, including photocopying, recording, taping, or storage in an electronic retrieval system—without prior written permission of the copyright owner.

Software derived from copyrighted NetApp material is subject to the following license and disclaimer:

THIS SOFTWARE IS PROVIDED BY NETAPP “AS IS” AND WITHOUT ANY EXPRESS OR IMPLIED WARRANTIES, INCLUDING, BUT NOT LIMITED TO, THE IMPLIED WARRANTIES OF MERCHANTABILITY AND FITNESS FOR A PARTICULAR PURPOSE, WHICH ARE HEREBY DISCLAIMED. IN NO EVENT SHALL NETAPP BE LIABLE FOR ANY DIRECT, INDIRECT, INCIDENTAL, SPECIAL, EXEMPLARY, OR CONSEQUENTIAL DAMAGES (INCLUDING, BUT NOT LIMITED TO, PROCUREMENT OF SUBSTITUTE GOODS OR SERVICES; LOSS OF USE, DATA, OR PROFITS; OR BUSINESS INTERRUPTION) HOWEVER CAUSED AND ON ANY THEORY OF LIABILITY, WHETHER IN CONTRACT, STRICT LIABILITY, OR TORT (INCLUDING NEGLIGENCE OR OTHERWISE) ARISING IN ANY WAY OUT OF THE USE OF THIS SOFTWARE, EVEN IF ADVISED OF THE POSSIBILITY OF SUCH DAMAGE.

NetApp reserves the right to change any products described herein at any time, and without notice. NetApp assumes no responsibility or liability arising from the use of products described herein, except as expressly agreed to in writing by NetApp. The use or purchase of this product does not convey a license under any patent rights, trademark rights, or any other intellectual property rights of NetApp.

The product described in this manual may be protected by one or more U.S. patents, foreign patents, or pending applications.

LIMITED RIGHTS LEGEND: Use, duplication, or disclosure by the government is subject to restrictions as set forth in subparagraph (b)(3) of the Rights in Technical Data -Noncommercial Items at DFARS 252.227-7013 (FEB 2014) and FAR 52.227-19 (DEC 2007).

Data contained herein pertains to a commercial product and/or commercial service (as defined in FAR 2.101) and is proprietary to NetApp, Inc. All NetApp technical data and computer software provided under this Agreement is commercial in nature and developed solely at private expense. The U.S. Government has a non-exclusive, non-transferrable, nonsublicensable, worldwide, limited irrevocable license to use the Data only in connection with and in support of the U.S. Government contract under which the Data was delivered. Except as provided herein, the Data may not be used, disclosed, reproduced, modified, performed, or displayed without the prior written approval of NetApp, Inc. United States Government license rights for the Department of Defense are limited to those rights identified in DFARS clause 252.227-7015(b) (FEB 2014).

Trademark information

NETAPP, the NETAPP logo, and the marks listed at http://www.netapp.com/TM are trademarks of NetApp, Inc. Other company and product names may be trademarks of their respective owners.