Chassis

Install and maintain

NetApp
March 22, 2024

This PDF was generated from https://docs.netapp.com/us-en/ontap-systems/asa-c800/chassis-replace-overview.html on March 22, 2024. Always check docs.netapp.com for the latest.

Table of Contents

Chassis . . . 1
Replace the chassis - ASA C800 . . . 1
Shut down the controllers - ASA C800 . . . 1
Move and replace hardware - ASA C800 . . . 2
Complete the restoration and replacement process - ASA C800 . . . 5

Chassis

Replace the chassis - ASA C800

To replace the chassis, you must move the bezel, controller modules, and NVMe drives from the impaired chassis to the replacement chassis, and then remove the impaired chassis from the equipment rack or system cabinet and install the replacement chassis in its place.

All other components in the system must be functioning properly; if not, you must contact technical support.

- You can use this procedure with all versions of ONTAP supported by your system.
- This procedure is written with the assumption that you are moving the bezel, NVMe drives, and controller modules to the new chassis, and that the replacement chassis is a new component from NetApp.
- This procedure is disruptive. For a two-node cluster, you will have a complete service outage and a partial outage in a multi-node cluster.

Shut down the controllers - ASA C800

This procedure is for 2-node, non-MetroCluster configurations only. If you have a system with more than two nodes, see How to perform a graceful shutdown and power up of one HA pair in a 4-node cluster.

Before you begin

You need:

- Local administrator credentials for ONTAP.
- NetApp onboard key management (OKM) cluster-wide passphrase if using storage encryption.
- SP/BMC accessability for each controller.
- Stop all clients/host from accessing data on the NetApp system.
- Suspend external backup jobs.
- Necessary tools and equipment for the replacement.

> If the system is a NetApp StorageGRID or ONTAP S3 used as FabricPool cloud tier, refer to the Gracefully shutdown and power up your storage system Resolution Guide after performing this procedure.

> If using FlexArray array LUNs, follow the specific vendor storage array documentation for the shutdown procedure to perform for those systems after performing this procedure.

> If using SSDs, refer to SU490: (Impact: Critical) SSD Best Practices: Avoid risk of drive failure and data loss if powered off for more than two months

As a best practice before shutdown, you should:

- Perform additional system health checks.

- Upgrade ONTAP to a recommended release for the system.
- Resolve any Active IQ Wellness Alerts and Risks. Make note of any faults presently on the system, such as LEDs on the system components.

Steps

1. Log into the cluster through SSH or log in from any node in the cluster using a local console cable and a laptop/console.
2. Turn off AutoSupport and indicate how long you expect the system to be off line:

   ```
   system node autosupport invoke -node * -type all -message "MAINT=8h Power
   Maintenance"
   ```

3. Identify the SP/BMC address of all nodes:

   ```
   system service-processor show -node * -fields address
   ```

4. Exit the cluster shell: `exit`
5. Log into SP/BMC over SSH using the IP address of any of the nodes listed in the output from the previous step.

   If your're using a console/laptop, log into the controller using the same cluster administrator credentials.

   > Open an SSH session to every SP/BMC connection so that you can monitor progress.

6. Halt all nodes in the cluster:

   ```
   system node halt -node * -skip-lif-migration-before-shutdown true -ignore
   -quorum-warnings true -inhibit-takeover true.
   ```

   > For clusters using SnapMirror synchronous operating in StrictSync mode: `system node halt -node * -skip-lif-migration-before-shutdown true -ignore-quorum -warnings true -inhibit-takeover true -ignore-strict-sync-warnings true`

7. Enter **y** for each controller in the cluster when you see *`Warning: Are you sure you want to halt node "cluster name-controller number"? {y|n}:`*
8. Wait for each controller to halt and display the LOADER prompt.
9. Turn off each PSU or unplug them if there is no PSU on/off switch.
10. Unplug the power cord from each PSU.
11. Verify that all controllers in the impaired chassis are powered down.

Move and replace hardware - ASA C800

Move the power supplies, hard drives, and controller module from the impaired chassis to the new chassis, and swap out the impaired chassis with the new chassis of the same model as the impaired chassis.

Step 1: Remove the controller modules

To replace the chassis, you must remove the controller modules from the old chassis.

1. If you are not already grounded, properly ground yourself.
2. Release the power cable retainers, and then unplug the cables from the power supplies.
3. Loosen the hook and loop strap binding the cables to the cable management device, and then unplug the system cables from the controller module, keeping track of where the cables were connected.

   Leave the cables in the cable management device so that when you reinstall the cable management device, the cables are organized.

4. Remove the cable management device from the controller module and set it aside.
5. Press down on both of the locking latches, and then rotate both latches downward at the same time.

   The controller module moves slightly out of the chassis.

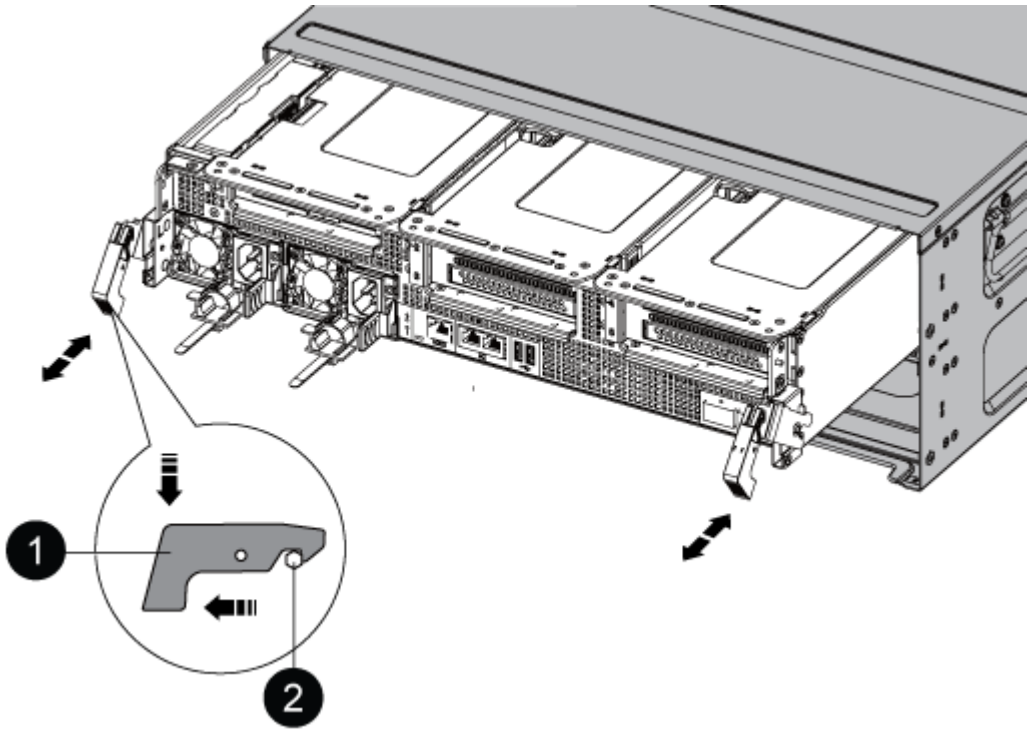

1	Locking latch
2	Locking pin

6. Slide the controller module out of the chassis.

   Make sure that you support the bottom of the controller module as you slide it out of the chassis.

7. Set the controller module aside in a safe place, and repeat these steps for the other controller module in the chassis.

Step 2: Move drives to the new chassis

You need to move the drives from each bay opening in the old chassis to the same bay opening in the new chassis.

1. Gently remove the bezel from the front of the system.
2. Remove the drives:
   a. Press the release button at the top of the carrier face below the LEDs.
   b. Pull the cam handle to its fully open position to unseat the drive from the midplane, and then gently slide the drive out of the chassis.

      The drive should disengage from the chassis, allowing it to slide free of the chassis.

      When removing a drive, always use two hands to support its weight.

      Drives are fragile. Handle them as little as possible to prevent damage to them.
3. Align the drive from the old chassis with the same bay opening in the new chassis.
4. Gently push the drive into the chassis as far as it will go.

   The cam handle engages and begins to rotate upward.
5. Firmly push the drive the rest of the way into the chassis, and then lock the cam handle by pushing it up and against the drive holder.

   Be sure to close the cam handle slowly so that it aligns correctly with the front of the drive carrier. It clicks when it is secure.
6. Repeat the process for the remaining drives in the system.

Step 3: Replace a chassis from within the equipment rack or system cabinet

You must remove the existing chassis from the equipment rack or system cabinet before you can install the replacement chassis.

1. Remove the screws from the chassis mount points.
2. With two people, slide the old chassis off the rack rails in a system cabinet or equipment rack, and then set it aside.
3. If you are not already grounded, properly ground yourself.
4. Using two people, install the replacement chassis into the equipment rack or system cabinet by guiding the chassis onto the rack rails in a system cabinet or equipment rack.
5. Slide the chassis all the way into the equipment rack or system cabinet.
6. Secure the front of the chassis to the equipment rack or system cabinet, using the screws you removed from the old chassis.
7. If you have not already done so, install the bezel.

Step 4: Install the controller modules

After you install the controller modules into the new chassis, you need to boot it.

For HA pairs with two controller modules in the same chassis, the sequence in which you install the controller module is especially important because it attempts to reboot as soon as you completely seat it in the chassis.

1. Align the end of the controller module with the opening in the chassis, and then gently push the controller module halfway into the system.

   > Do not completely insert the controller module in the chassis until instructed to do so.

2. Recable the console to the controller module, and then reconnect the management port.
3. Plug the power cables into the power supplies and reinstall the power cable retainers.
4. Complete the reinstallation of the controller module:
   a. Firmly push the controller module into the chassis until it meets the midplane and is fully seated.

      The locking latches rise when the controller module is fully seated.

      > Do not use excessive force when sliding the controller module into the chassis to avoid damaging the connectors.

      The controller module begins to boot as soon as it is fully seated in the chassis. Be prepared to interrupt the boot process.

   b. Rotate the locking latches upward, tilting them so that they clear the locking pins, and then lower them into the locked position.
   c. If you have not already done so, reinstall the cable management device.
   d. Interrupt the normal boot process by pressing `Ctrl-C`.
5. Repeat the preceding steps to install the second controller into the new chassis.

Complete the restoration and replacement process - ASA C800

You must verify the HA state of the chassis and return the failed part to NetApp, as described in the RMA instructions shipped with the kit.

Step 1: Verify and set the HA state of the chassis

You must verify the HA state of the chassis, and, if necessary, update the state to match your system configuration.

1. In Maintenance mode, from either controller module, display the HA state of the local controller module and chassis: `ha-config show`

   The HA state should be the same for all components.

2. If the displayed system state for the chassis does not match your system configuration:

a. Set the HA state for the chassis: `ha-config modify chassis HA-state`

   The value for HA-state can be one of the following:

   - `ha`
   - `mcc`
   - `mccip`
   - `non-ha`

b. Confirm that the setting has changed: `ha-config show`

3. If you have not already done so, recable the rest of your system.
4. Reinstall the bezel on the front of the system.

Step 2: Return the failed part to NetApp

Return the failed part to NetApp, as described in the RMA instructions shipped with the kit. See the Part Return & Replacements page for further information.

Copyright information

Copyright © 2024 NetApp, Inc. All Rights Reserved. Printed in the U.S. No part of this document covered by copyright may be reproduced in any form or by any means—graphic, electronic, or mechanical, including photocopying, recording, taping, or storage in an electronic retrieval system—without prior written permission of the copyright owner.

Software derived from copyrighted NetApp material is subject to the following license and disclaimer:

THIS SOFTWARE IS PROVIDED BY NETAPP “AS IS” AND WITHOUT ANY EXPRESS OR IMPLIED WARRANTIES, INCLUDING, BUT NOT LIMITED TO, THE IMPLIED WARRANTIES OF MERCHANTABILITY AND FITNESS FOR A PARTICULAR PURPOSE, WHICH ARE HEREBY DISCLAIMED. IN NO EVENT SHALL NETAPP BE LIABLE FOR ANY DIRECT, INDIRECT, INCIDENTAL, SPECIAL, EXEMPLARY, OR CONSEQUENTIAL DAMAGES (INCLUDING, BUT NOT LIMITED TO, PROCUREMENT OF SUBSTITUTE GOODS OR SERVICES; LOSS OF USE, DATA, OR PROFITS; OR BUSINESS INTERRUPTION) HOWEVER CAUSED AND ON ANY THEORY OF LIABILITY, WHETHER IN CONTRACT, STRICT LIABILITY, OR TORT (INCLUDING NEGLIGENCE OR OTHERWISE) ARISING IN ANY WAY OUT OF THE USE OF THIS SOFTWARE, EVEN IF ADVISED OF THE POSSIBILITY OF SUCH DAMAGE.

NetApp reserves the right to change any products described herein at any time, and without notice. NetApp assumes no responsibility or liability arising from the use of products described herein, except as expressly agreed to in writing by NetApp. The use or purchase of this product does not convey a license under any patent rights, trademark rights, or any other intellectual property rights of NetApp.

The product described in this manual may be protected by one or more U.S. patents, foreign patents, or pending applications.

LIMITED RIGHTS LEGEND: Use, duplication, or disclosure by the government is subject to restrictions as set forth in subparagraph (b)(3) of the Rights in Technical Data -Noncommercial Items at DFARS 252.227-7013 (FEB 2014) and FAR 52.227-19 (DEC 2007).

Data contained herein pertains to a commercial product and/or commercial service (as defined in FAR 2.101) and is proprietary to NetApp, Inc. All NetApp technical data and computer software provided under this Agreement is commercial in nature and developed solely at private expense. The U.S. Government has a non-exclusive, non-transferrable, nonsublicensable, worldwide, limited irrevocable license to use the Data only in connection with and in support of the U.S. Government contract under which the Data was delivered. Except as provided herein, the Data may not be used, disclosed, reproduced, modified, performed, or displayed without the prior written approval of NetApp, Inc. United States Government license rights for the Department of Defense are limited to those rights identified in DFARS clause 252.227-7015(b) (FEB 2014).

Trademark information

NETAPP, the NETAPP logo, and the marks listed at http://www.netapp.com/TM are trademarks of NetApp, Inc. Other company and product names may be trademarks of their respective owners.