Controller

Install and maintain

NetApp
March 22, 2024

This PDF was generated from https://docs.netapp.com/us-en/ontap-systems/fas2800/controller-replace-overview.html on March 22, 2024. Always check docs.netapp.com for the latest.

Table of Contents

Controller . . . 1
Overview of controller module replacement - FAS2800 . . . 1
Shut down the impaired controller - FAS2800 . . . 1
Replace the controller module hardware - FAS2800 . . . 2
Restore and verify the system configuration - FAS2800 . . . 10
Recable the system and reassign disks - FAS2800 . . . 11
Complete system restoration - FAS2800 . . . 13

Controller

Overview of controller module replacement - FAS2800

You must review the prerequisites for the replacement procedure and select the correct one for your version of the ONTAP operating system.

- All drive shelves must be working properly.
- If your system is in an HA pair, the healthy controller must be able to take over the controller that is being replaced (referred to in this procedure as the “impaired controller”).
- This procedure includes steps for automatically or manually reassigning drives to the *replacement* controller, depending on your system’s configuration.

  You should perform the drive reassignment as directed in the procedure.

- You must replace the failed component with a replacement FRU component you received from your provider.
- You must be replacing a controller module with a controller module of the same model type. You cannot upgrade your system by just replacing the controller module.
- You cannot change any drives or drive shelves as part of this procedure.
- In this procedure, the boot device is moved from the impaired controller to the *replacement* controller so that the *replacement* controller will boot up in the same version of ONTAP as the old controller module.
- It is important that you apply the commands in these steps on the correct systems:
  - The *impaired* controller is the controller that is being replaced.
  - The *replacement* controller is the new controller that is replacing the impaired controller.
  - The *healthy* controller is the surviving controller.
- You must always capture the controller’s console output to a text file.

  This provides you a record of the procedure so that you can troubleshoot any issues that you might encounter during the replacement process.

Shut down the impaired controller - FAS2800

To shut down the impaired controller, you must determine the status of the controller and, if necessary, take over the controller so that the healthy controller continues to serve data from the impaired controller storage.

If you have a cluster with more than two nodes, it must be in quorum. If the cluster is not in quorum or a healthy controller shows false for eligibility and health, you must correct the issue before shutting down the impaired controller; see Synchronize a node with the cluster.

Steps

1. If AutoSupport is enabled, suppress automatic case creation by invoking an AutoSupport message:
   ```
   system node autosupport invoke -node * -type all -message
   MAINT=_number_of_hours_down_h
   ```

The following AutoSupport message suppresses automatic case creation for two hours: `cluster1:*> system node autosupport invoke -node * -type all -message MAINT=2h`

2. If the impaired controller is part of an HA pair, disable automatic giveback from the console of the healthy controller: `storage failover modify -node local -auto-giveback false`
3. Take the impaired controller to the LOADER prompt:

If the impaired controller is displaying…	Then…
The LOADER prompt	Go to Remove controller module.
Waiting for giveback…	Press Ctrl-C, and then respond `y`.
System prompt or password prompt (enter system password)	Take over or halt the impaired controller from the healthy controller: `storage failover takeover -ofnode` *`impaired_node_name`* When the impaired controller shows Waiting for giveback…, press Ctrl-C, and then respond `y`.

Replace the controller module hardware - FAS2800

Replace the impaired controller module hardware by removing the impaired controller, moving FRU components to the replacement controller module, installing the replacement controller module in the chassis, and then booting the replacement controller module.

Animation - Replace a controller module

Step 1: Remove controller module

Remove the impaired controller module from the chassis.

1. If you are not already grounded, properly ground yourself.
2. Loosen the hook and loop strap binding the cables to the cable management device, and then unplug the system cables and SFPs (if needed) from the controller module, keeping track of where the cables were connected.

   Leave the cables in the cable management device so that when you reinstall the cable management device, the cables are organized.

3. Remove and set aside the cable management devices from the left and right sides of the controller module.
4. If you left the SFP modules in the system after removing the cables, move them to the replacement controller module.
5. Squeeze the latch on the cam handle until it releases, open the cam handle fully to release the controller module from the midplane, and then, using two hands, pull the controller module out of the chassis.

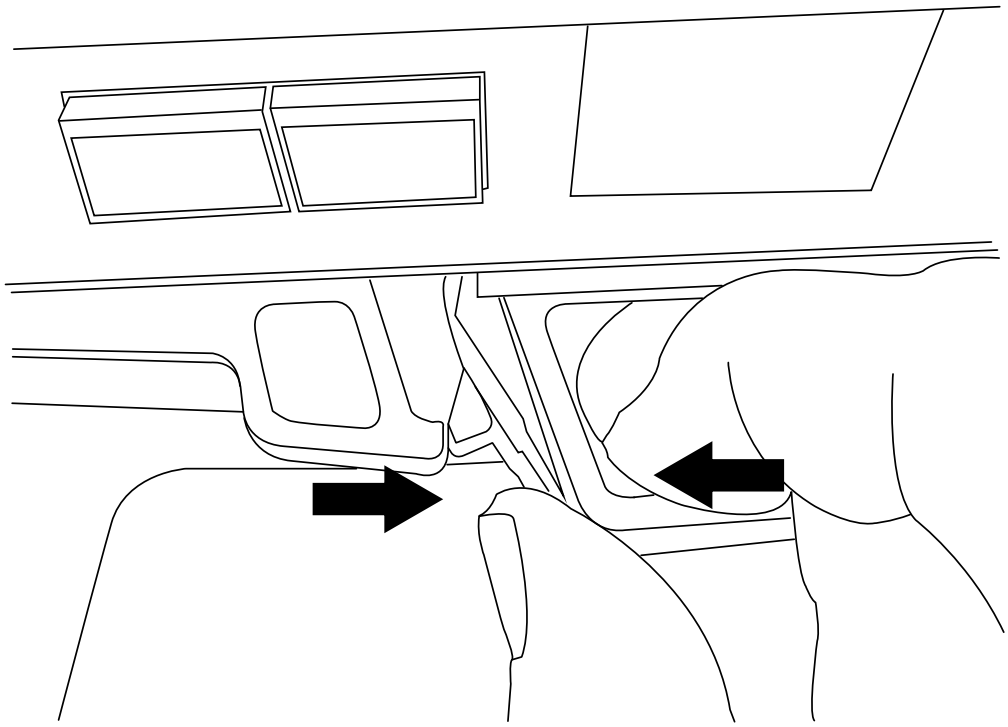

6. Turn the controller module over and place it on a flat, stable surface.
7. Open the cover by pressing the blue buttons on the sides of the controller module to release the cover, and then rotate the cover up and off of the controller module.

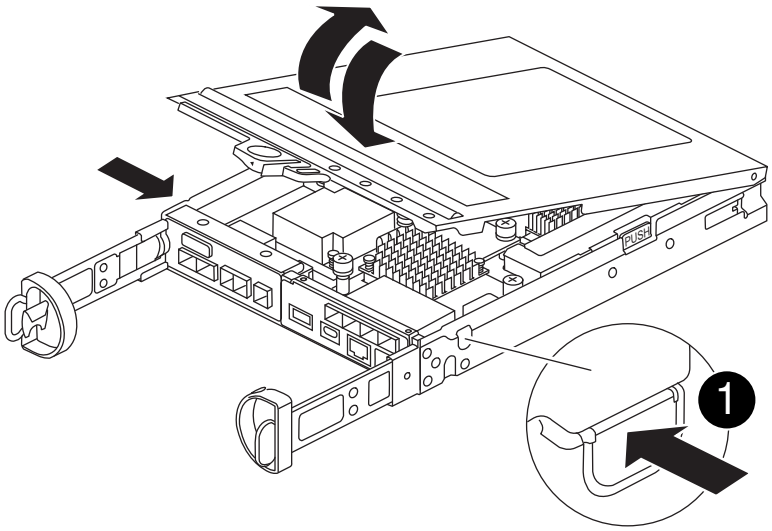

1	Controller module cover release button

Step 2: Move the NVMEM battery

Remove the NVMEM battery from the impaired controller module and install it into the replacement controller module.

> Do not plug the NVMEM battery in until directed to do so.

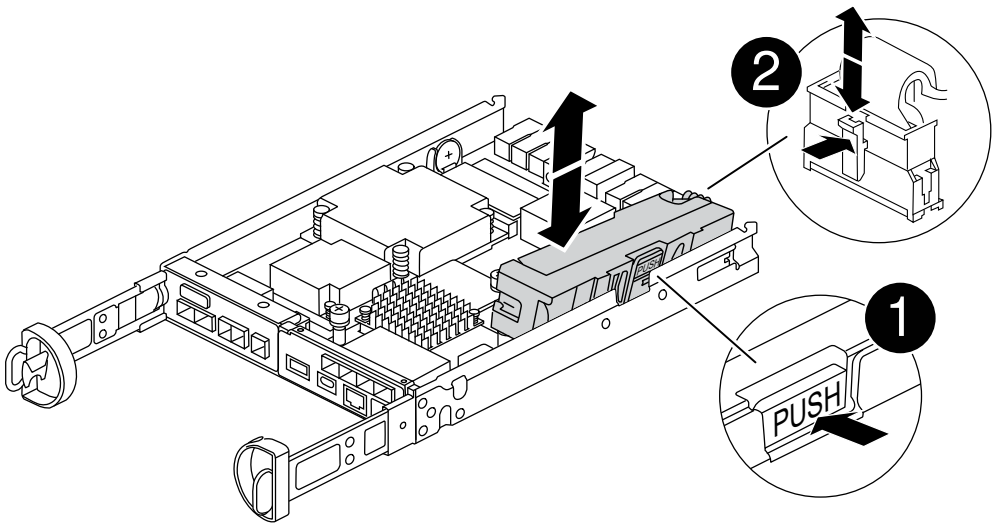

1	NVMEM battery release button
2	NVMEM battery plug

1. Remove the battery from the controller module:
   a. Press the blue button on the side of the controller module.
   b. Slide the battery up until it clears the holding brackets, and then lift the battery out of the controller module.
   c. Unplug the battery plug by squeezing the clip on the face of the battery plug to release the plug from the socket, and then unplug the battery cable from the socket.
2. Move the battery to the replacement controller module and install it:
   a. Aligning the battery with the holding brackets on the sheet metal side wall.
   b. Slide the battery pack down until the battery latch engages and clicks into the opening on the side wall.

> Do not plug the battery in yet. You will plug it in once the rest of the components are moved to the replacement controller module.

Step 3: Remove the mezzanine card

Remove the mezzanine bezel and PCIe mezzanine card from the impaired controller module.

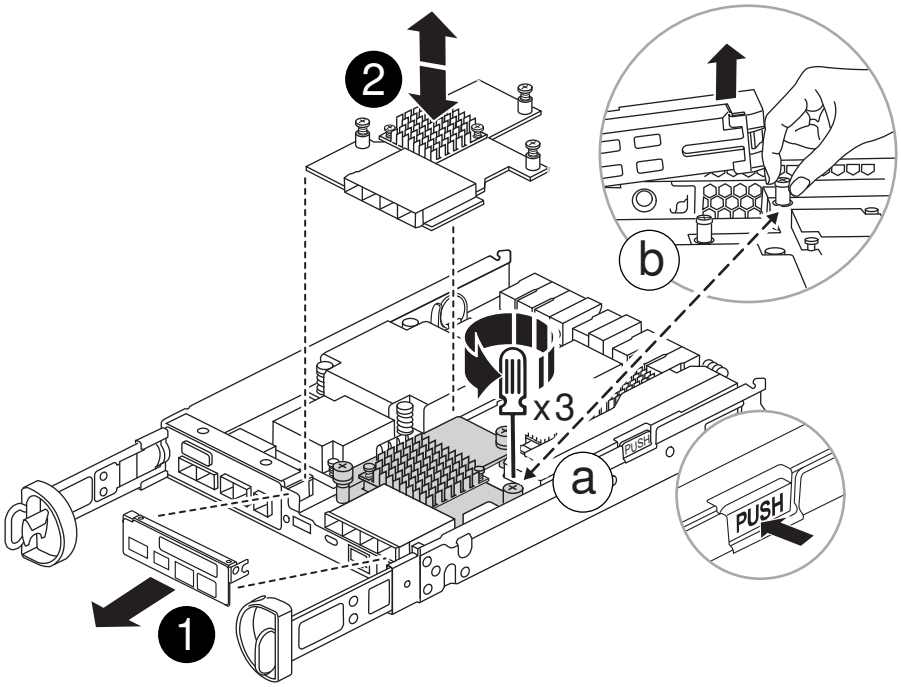

1	Riser bezel
2	PCIe mezzanine card

1. Remove the mezzanine card bezel by sliding it straight out from the controller module.
2. Loosen the thumbscrews on the mezzanine card.

   You can loosen the thumbscrews with your fingers or a screwdriver.

3. Lift the mezzanine card straight up and set it aside on an anti-static surface.

Step 4: Move the boot media

Remove the boot media from the impaired controller module and install it in the replacement controller module.

1. After removing the mezzanine card, locate the boot media using the following illustration or the FRU map on the controller module:

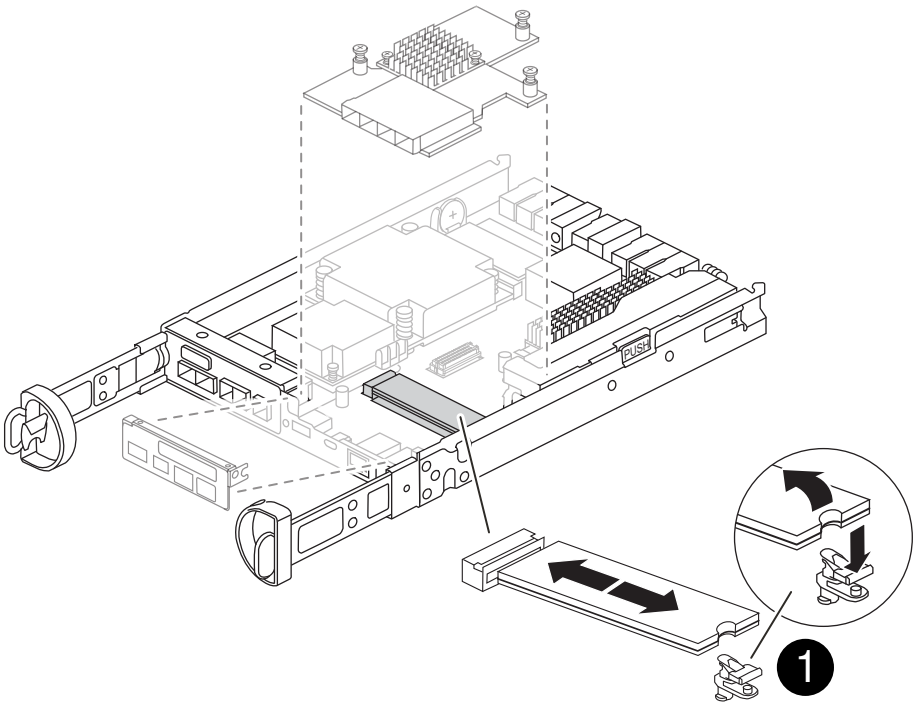

1	Boot media release button

2. Remove the boot media:
   a. Press the blue button on the boot media housing to release the boot media from its housing.
   b. Rotate the boot media up, and then gently pull it straight out of the boot media socket.

   > Do not twist or pull the boot media straight up, because this could damage the socket or the boot media.

3. Install the the boot media to the replacement controller module:
   a. Align the edges of the replacement boot media with the boot media socket, and then gently push it into the socket.
   b. Check the boot media to make sure that it is seated squarely and completely in the socket.

      If necessary, remove the boot media and reseat it into the socket.

   c. Push the blue locking button on the boot media housing, rotate the boot media all the way down, and then release the locking button to lock the boot media in place.

Step 5: Install the mezzanine card in the replacement controller

Install the mezzanine card in the replacement controller module.

1. Reinstall the mezzanine card:
   a. Align mezzanine card with the socket on the motherboard.
   b. Gently push down on the card to seat the card in the socket.
   c. Tighten the three thumbscrews on the mezzanine card.

2. Reinstall the mezzanine card bezel.

Step 6: Move the DIMMs

Remove the DIMMs from the impaired controller module and install them into the replacement controller module.

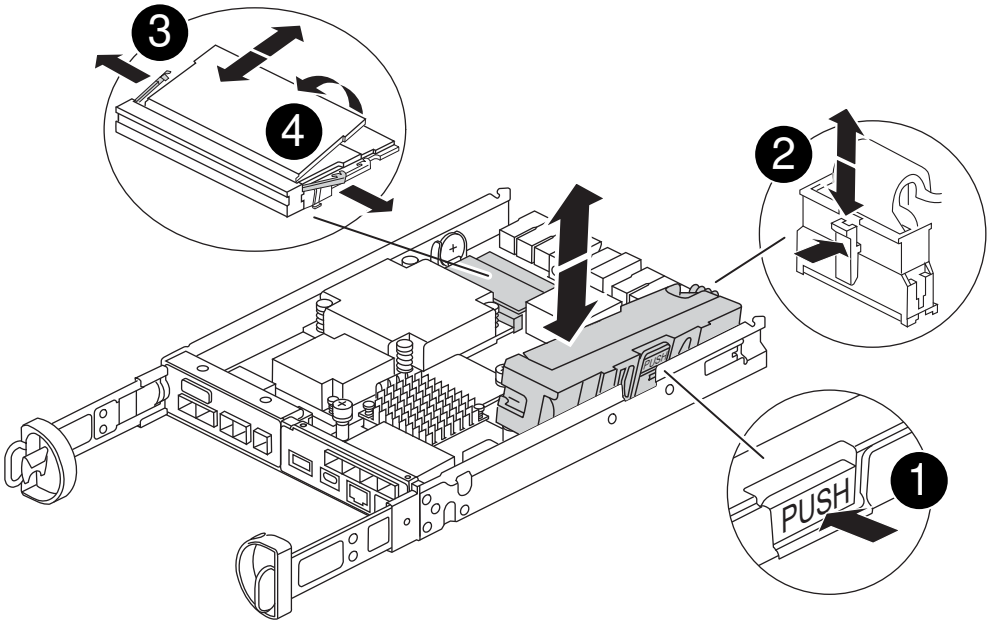

1	DIMM locking latches
2	DIMM

1. Locate the DIMMs on your controller module

   Note the location of the DIMM in the sockets so that you can insert the DIMM in the same location in the replacement controller module and in the proper orientation.

2. Remove the DIMMs from the impaired controller module:
   a. Eject the DIMM from its slot by slowly pushing apart the two DIMM ejector tabs on either side of the DIMM.

      The DIMM will rotate up a little.

   b. Rotate the DIMM as far as it will go, and then slide the DIMM out of the socket.

      Carefully hold the DIMM by the edges to avoid pressure on the components on the DIMM circuit board.

3. Verify that the NVMEM battery is not plugged into the replacement controller module.
4. Install the DIMMs in the replacement controller in the same place they were in the impaired controller:

a. Push carefully, but firmly, on the top edge of the DIMM until the ejector tabs snap into place over the notches at the ends of the DIMM.

   The DIMM fits tightly in the slot, but should go in easily. If not, realign the DIMM with the slot and reinsert it.

   Visually inspect the DIMM to verify that it is evenly aligned and fully inserted into the slot.

5. Repeat these steps for the other DIMM.

Step 7: Move a caching module

Remove the caching module from the impaired controller module install it into replacement controller module.

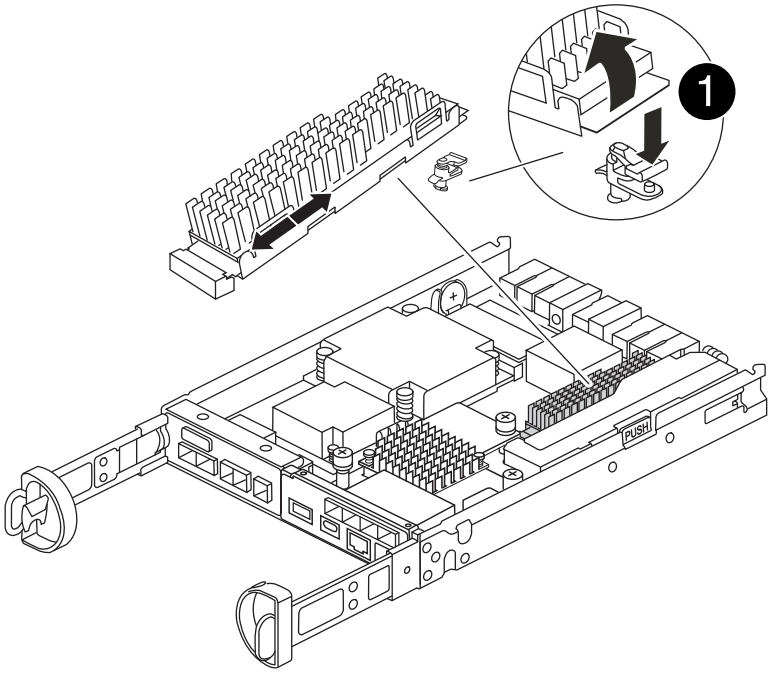

1	Caching module locking button

1. Locate the caching module near the rear of the controller module and remove it:
   a. Press the blue locking button and rotate the caching module upward.
   b. Gently pull the caching module straight out of the housing.
2. Install the caching module in the replacement controller module:
   a. Align the edges of the caching module with the socket in the housing, and then gently push it into the socket.
   b. Verify that the caching module is seated squarely and completely in the socket.

      If necessary, remove the caching module and reseat it into the socket.

   c. Push the blue locking button, rotate the caching module all the way down, and then release the locking button to lock the caching module in place.

3. Plug in the NVMEM battery.

   Make sure that the plug locks down into the battery power socket on the motherboard.

   > If plugging in the battery is difficult, remove the battery from the controller module, plug it in, and then reinstall the battery into the controller module.

4. Reinstall the controller module cover.

Step 8: Install the NV battery

Install the NV battery into the replacement controller module.

1. Plug the battery plug back into the socket on the controller module.

   Make sure that the plug locks down into the battery socket on the motherboard.

2. Aligning the battery with the holding brackets on the sheet metal side wall.
3. Slide the battery pack down until the battery latch engages and clicks into the opening on the side wall.
4. Reinstall the controller module cover and lock it into place.

Step 9: Install the controller

Install the replacement controller module into the system chassis and boot ONTAP.

> The system might update system firmware when it boots. Do not abort this process. The procedure requires you to interrupt the boot process, which you can typically do at any time after prompted to do so. However, if the system updates the system firmware when it boots, you must wait until after the update is complete before interrupting the boot process.

1. If you are not already grounded, properly ground yourself.
2. If you have not already done so, replace the cover on the controller module.
3. Turn the controller module.
4. Align the end of the controller module with the opening in the chassis, and then gently push the controller module halfway into the system.

   > Do not completely insert the controller module in the chassis until instructed to do so.

5. Complete the reinstallation of the controller module:
   a. With the cam handle in the open position, firmly push the controller module in until it meets the midplane and is fully seated, and then close the cam handle to the locked position.

      > Do not use excessive force when sliding the controller module into the chassis to avoid damaging the connectors.

      The controller begins to boot as soon as it is seated in the chassis.

   b. If you have not already done so, reinstall the cable management device.
   c. Bind the cables to the cable management device with the hook and loop strap.

> You must look for an Automatic firmware update console message. If the update message appears, do not press `Ctrl-C` to interrupt the boot process until after you see a message confirming that the update is complete. If the firmware update is aborted, the boot process exits to the LOADER prompt. You must run the `update_flash` command, and then enter `bye -g` to reboot the system.

Important: During the boot process, you might see the following prompts:

- A prompt warning of a system ID mismatch and asking to override the system ID. Respond `y` to this prompt.
- A prompt warning that when entering Maintenance mode in an HA configuration you must ensure that the healthy controller remains down. Respond `y` to this prompt.

Restore and verify the system configuration - FAS2800

After completing the hardware replacement and booting the replacement controller, verify the low-level system configuration of the replacement controller and reconfigure system settings as necessary.

Step 1: Set and verify system time after replacing the controller

You should check the time and date on the replacement controller module against the healthy controller module in an HA pair, or against a reliable time server in a stand-alone configuration. If the time and date do not match, you must reset them on the replacement controller module to prevent possible outages on clients due to time differences.

About this task

It is important that you apply the commands in the steps on the correct systems:

- The *replacement* node is the new node that replaced the impaired node as part of this procedure.
- The *healthy* node is the HA partner of the *replacement* node.

Steps

1. If the *replacement* node is not at the LOADER prompt, halt the system to the LOADER prompt.
2. On the *healthy* node, check the system time: `cluster date show`

   The date and time are based on the configured timezone.

3. At the LOADER prompt, check the date and time on the *replacement* node: `show date`

   The date and time are given in GMT.

4. If necessary, set the date in GMT on the replacement node: `set date` *`mm/dd/yyyy`*
5. If necessary, set the time in GMT on the replacement node: `set time` *`hh:mm:ss`*
6. At the LOADER prompt, confirm the date and time on the *replacement* node: `show date`

   The date and time are given in GMT.

Step 2: Verify and set the HA state of the controller module

You must verify the `HA` state of the controller module and, if necessary, update the state to match your system configuration.

1. In Maintenance mode from the new controller module, verify that all components display the same `HA` state: `ha-config show`

   The HA state should be the same for all components.

2. If the displayed system state for the controller does not match your system configuration, set the HA state for the replacement controller module: `ha-config modify controller` *`HA-state`*

   The value for HA-state can be one of the following:

   - `ha`
   - `mcc`
   - `mcc-2n`
   - `mccip`

     a. Confirm that the setting has changed: `ha-config show`

3. Reboot the controller module.

   During the boot process, you might see the following prompts:

   - A prompt warning of a system ID mismatch and asking to override the system ID.
   - A prompt warning that when entering Maintenance mode in an HA configuration you must ensure that the healthy controller remains down. You can safely respond `y` to these prompts.

Recable the system and reassign disks - FAS2800

To complete the replacement procedure and restore your system to full operation, you must recable the storage, confirm disk reassignment, restore the NetApp Storage Encryption configuration (if necessary), and install licenses for the new controller. You must complete a series of tasks before restoring your system to full operation.

Step 1: Recable the system

Recable the controller module's storage and network connections.

Steps

1. Recable the system.
2. Verify that the cabling is correct by using Active IQ Config Advisor.

   a. Download and install Config Advisor.

   b. Enter the information for the target system, and then click Collect Data.

   c. Click the Cabling tab, and then examine the output. Make sure that all disk shelves are displayed and all disks appear in the output, correcting any cabling issues you find.

d. Check other cabling by clicking the appropriate tab, and then examining the output from Config Advisor.

Step 2: Reassign disks

You must confirm the system ID change when you boot the *replacement* controller and then verify that the change was implemented.

1. If the *replacement* controller is in Maintenance mode (showing the `*>` prompt, exit Maintenance mode and go to the LOADER prompt: `halt`
2. From the LOADER prompt on the *replacement* controller, boot the controller, entering `y` if you are prompted to override the system ID due to a system ID mismatch:`boot_ontap`
3. Wait until the `Waiting for giveback…` message is displayed on the *replacement* controller console and then, from the healthy controller, verify that the new partner system ID has been automatically assigned: `storage failover show`

   In the command output, you should see a message that the system ID has changed on the impaired controller, showing the correct old and new IDs. In the following example, node2 has undergone replacement and has a new system ID of 151759706.

   ```
   node1> `storage failover show`
                                       Takeover
   Node              Partner           Possible     State Description
   ------------      ------------      --------
   -------------------------------------
   node1             node2             false        System ID changed on
   partner (Old:
                                                     151759755, New:
   151759706), In takeover
   node2             node1             -            Waiting for giveback
   (HA mailboxes)
   ```

4. From the healthy controller, verify that any coredumps are saved:
   a. Change to the advanced privilege level: `set -privilege advanced`

      You can respond `Y` when prompted to continue into advanced mode. The advanced mode prompt appears (*>).

   b. Save any coredumps: `system node run -node` *`local-node-name`* `partner savecore`
   c. Wait for the `savecore` command to complete before issuing the giveback.

      You can enter the following command to monitor the progress of the savecore command: `system node run -node` *`local-node-name`* `partner savecore -s`

   d. Return to the admin privilege level: `set -privilege admin`
5. Give back the controller:
   a. From the healthy controller, give back the replaced controller's storage: `storage failover giveback -ofnode` *`replacement_node_name`*

The *replacement* controller takes back its storage and completes booting.

If you are prompted to override the system ID due to a system ID mismatch, you should enter `y`.

> If the giveback is vetoed, resolve the veto issue. If the veto is not critical to resolve, you can override the veto.

Find the High-Availability Configuration content for your version of ONTAP 9

b. After the giveback has been completed, confirm that the HA pair is healthy and that takeover is possible: `storage failover show`

   The output from the `storage failover show` command should not include the System ID changed on partner message.

6. Verify that the disks were assigned correctly: `storage disk show -ownership`

   The disks belonging to the *replacement* controller should show the new system ID. In the following example, the disks owned by node1 now show the new system ID, 1873775277:

```
node1> `storage disk show -ownership`

Disk  Aggregate Home  Owner  DR Home  Home ID    Owner ID  DR Home ID
Reserver  Pool
----- ------    ----- ------ -------- -------    -------    -------
---------  ---
1.0.0  aggr0_1  node1 node1  -        1873775277 1873775277  -
1873775277 Pool0
1.0.1  aggr0_1  node1 node1           1873775277 1873775277  -
1873775277 Pool0
.
.
.
```

Complete system restoration - FAS2800

Restore your system to full operation by restoring the NetApp Storage Encryption or Volume Encryption configurations (if necessary), and installing licenses for the replacement controller, and returning the failed part to NetApp, as described in the RMA instructions shipped with the kit.

Step 1: Install licenses for the replacement controller in ONTAP

You must install new licenses for the *replacement* node if the impaired node was using ONTAP features that require a standard (node-locked) license. For features with standard licenses, each node in the cluster should have its own key for the feature.

About this task

Until you install license keys, features requiring standard licenses continue to be available to the *replacement* node. However, if the impaired node was the only node in the cluster with a license for the feature, no configuration changes to the feature are allowed. Also, using unlicensed features on the node might put you out of compliance with your license agreement, so you should install the replacement license key or keys on the *replacement* node as soon as possible.

Before you begin

The licenses keys must be in the 28-character format.

You have a 90-day grace period in which to install the license keys. After the grace period, all old licenses are invalidated. After a valid license key is installed, you have 24 hours to install all of the keys before the grace period ends.

Steps

1. If you need new license keys, obtain replacement license keys on the NetApp Support Site in the My Support section under Software licenses.

   > The new license keys that you require are automatically generated and sent to the email address on file. If you fail to receive the email with the license keys within 30 days, you should contact technical support.

2. Install each license key: `system license add -license-code license-key, license-key...`
3. Remove the old licenses, if desired:
   a. Check for unused licenses: `license clean-up -unused -simulate`
   b. If the list looks correct, remove the unused licenses: `license clean-up -unused`

Step 2: Restore Storage and Volume Encryption functionality

For storage systems that you previously configured to use Storage or Volume Encryption, you must perform additional steps to provide uninterrupted Encryption functionality. You can skip this task on storage systems that do not have Storage or Volume Encryption enabled.

> This step is not required when replacing a DIMM.

Steps

1. Use one of the following procedures, depending on whether you are using onboard or external key management:
   - Restore onboard key management encryption keys
   - Restore external key management encryption keys
2. Reset the SED MSID

Step 3: Verify LIFs and register the serial number

Before returning the *replacement* node to service, you should verify that the LIFs are on their home ports, and register the serial number of the *replacement* node if AutoSupport is enabled, and reset automatic giveback.

Steps

1. Verify that the logical interfaces are reporting to their home server and ports: `network interface show -is-home false`

If any LIFs are listed as false, revert them to their home ports: `network interface revert -vserver * -lif *`

2. Register the system serial number with NetApp Support.
   - If AutoSupport is enabled, send an AutoSupport message to register the serial number.
   - If AutoSupport is not enabled, call NetApp Support to register the serial number.
3. If an AutoSupport maintenance window was triggered, end it by using the `system node autosupport invoke -node * -type all -message MAINT=END` command.
4. If automatic giveback was disabled, reenable it: `storage failover modify -node local -auto -giveback true`

Step 4: Return the failed part to NetApp

Return the failed part to NetApp, as described in the RMA instructions shipped with the kit. See the Part Return & Replacements page for further information.

Copyright information

Copyright © 2024 NetApp, Inc. All Rights Reserved. Printed in the U.S. No part of this document covered by copyright may be reproduced in any form or by any means—graphic, electronic, or mechanical, including photocopying, recording, taping, or storage in an electronic retrieval system—without prior written permission of the copyright owner.

Software derived from copyrighted NetApp material is subject to the following license and disclaimer:

THIS SOFTWARE IS PROVIDED BY NETAPP “AS IS” AND WITHOUT ANY EXPRESS OR IMPLIED WARRANTIES, INCLUDING, BUT NOT LIMITED TO, THE IMPLIED WARRANTIES OF MERCHANTABILITY AND FITNESS FOR A PARTICULAR PURPOSE, WHICH ARE HEREBY DISCLAIMED. IN NO EVENT SHALL NETAPP BE LIABLE FOR ANY DIRECT, INDIRECT, INCIDENTAL, SPECIAL, EXEMPLARY, OR CONSEQUENTIAL DAMAGES (INCLUDING, BUT NOT LIMITED TO, PROCUREMENT OF SUBSTITUTE GOODS OR SERVICES; LOSS OF USE, DATA, OR PROFITS; OR BUSINESS INTERRUPTION) HOWEVER CAUSED AND ON ANY THEORY OF LIABILITY, WHETHER IN CONTRACT, STRICT LIABILITY, OR TORT (INCLUDING NEGLIGENCE OR OTHERWISE) ARISING IN ANY WAY OUT OF THE USE OF THIS SOFTWARE, EVEN IF ADVISED OF THE POSSIBILITY OF SUCH DAMAGE.

NetApp reserves the right to change any products described herein at any time, and without notice. NetApp assumes no responsibility or liability arising from the use of products described herein, except as expressly agreed to in writing by NetApp. The use or purchase of this product does not convey a license under any patent rights, trademark rights, or any other intellectual property rights of NetApp.

The product described in this manual may be protected by one or more U.S. patents, foreign patents, or pending applications.

LIMITED RIGHTS LEGEND: Use, duplication, or disclosure by the government is subject to restrictions as set forth in subparagraph (b)(3) of the Rights in Technical Data -Noncommercial Items at DFARS 252.227-7013 (FEB 2014) and FAR 52.227-19 (DEC 2007).

Data contained herein pertains to a commercial product and/or commercial service (as defined in FAR 2.101) and is proprietary to NetApp, Inc. All NetApp technical data and computer software provided under this Agreement is commercial in nature and developed solely at private expense. The U.S. Government has a non-exclusive, non-transferrable, nonsublicensable, worldwide, limited irrevocable license to use the Data only in connection with and in support of the U.S. Government contract under which the Data was delivered. Except as provided herein, the Data may not be used, disclosed, reproduced, modified, performed, or displayed without the prior written approval of NetApp, Inc. United States Government license rights for the Department of Defense are limited to those rights identified in DFARS clause 252.227-7015(b) (FEB 2014).

Trademark information

NETAPP, the NETAPP logo, and the marks listed at http://www.netapp.com/TM are trademarks of NetApp, Inc. Other company and product names may be trademarks of their respective owners.