Controller

Install and maintain

NetApp
March 22, 2024

This PDF was generated from https://docs.netapp.com/us-en/ontap-systems/fas500f/controller-replace-overview.html on March 22, 2024. Always check docs.netapp.com for the latest.

Table of Contents

Controller . . . 1
Overview of controller module replacement - FAS500f . . . 1
Shut down the impaired controller - FAS500f . . . 1
Replace the controller module hardware - FAS500f . . . 2
Restore and verify the system configuration - FAS500f . . . 14
Recable the system and reassign disks - FAS500f . . . 15
Complete system restoration - FAS500f . . . 18

Controller

Overview of controller module replacement - FAS500f

You must review the prerequisites for the replacement procedure and select the correct one for your version of the ONTAP operating system.

- All drive shelves must be working properly.
- If your system is in a MetroCluster configuration, you must review the section Choosing the correct recovery procedure to determine whether you should use this procedure.
- You must replace the failed component with a replacement FRU component you received from your provider.
- You must be replacing a controller module with a controller module of the same model type. You cannot upgrade your system by just replacing the controller module.
- You cannot change any drives or drive shelves as part of this procedure.
- In this procedure, the boot device is moved from the impaired controller to the *replacement* controller so that the *replacement* controller will boot up in the same version of ONTAP as the old controller module.
- It is important that you apply the commands in these steps on the correct systems:
  - The *impaired* controller is the controller that is being replaced.
  - The *replacement* controller is the new controller that is replacing the impaired controller.
  - The *healthy* controller is the surviving controller.
- You must always capture the controller's console output to a text file.

  This provides you a record of the procedure so that you can troubleshoot any issues that you might encounter during the replacement process.

Shut down the impaired controller - FAS500f

To shut down the impaired controller, you must determine the status of the controller and, if necessary, take over the controller so that the healthy controller continues to serve data from the impaired controller storage.

About this task

- If you are using NetApp Storage Encryption, you must have reset the MSID using the instructions in the Returning SEDs to unprotected mode.
- If you have a SAN system, you must have checked event messages (`cluster kernel-service show`) for impaired controller SCSI blade. The `cluster kernel-service show` command displays the node name, quorum status of that node, availability status of that node, and operational status of that node.

  Each SCSI-blade process should be in quorum with the other nodes in the cluster. Any issues must be resolved before you proceed with the replacement.

- If you have a cluster with more than two nodes, it must be in quorum. If the cluster is not in quorum or a healthy controller shows false for eligibility and health, you must correct the issue before shutting down the impaired controller; see Synchronize a node with the cluster.

Steps

1. If AutoSupport is enabled, suppress automatic case creation by invoking an AutoSupport message: `system node autosupport invoke -node * -type all -message MAINT=number_of_hours_downh`

   The following AutoSupport message suppresses automatic case creation for two hours: `cluster1:> system node autosupport invoke -node * -type all -message MAINT=2h`

2. Disable automatic giveback from the console of the healthy controller: `storage failover modify -node local -auto-giveback false`

   When you see *Do you want to disable auto-giveback?*, enter `y`.

3. Take the impaired controller to the LOADER prompt:

If the impaired controller is displaying…	Then…
The LOADER prompt	Go to the next step.
Waiting for giveback…	Press Ctrl-C, and then respond `y` when prompted.
System prompt or password prompt	Take over or halt the impaired controller from the healthy controller: `storage failover takeover -ofnode` *`impaired_node_name`* When the impaired controller shows Waiting for giveback…, press Ctrl-C, and then respond `y`.

Replace the controller module hardware - FAS500f

To replace the controller module hardware, you must remove the impaired controller, move FRU components to the replacement controller module, install the replacement controller module in the chassis, and then boot the system to Maintenance mode.

Step 1: Remove the controller module

You must remove the controller module from the chassis when you replace a component inside the controller module.

Make sure that you label the cables so that you know where they came from.

You can use the following video or the tabulated steps to replace a controller module:

Animation - Replace a controller module

1. If you are not already grounded, properly ground yourself.
2. Unplug the controller module power supplies from the source.

3. Release the power cable retainers, and then unplug the cables from the power supplies.
4. Insert your forefinger into the latching mechanism on either side of the controller module, press the lever with your thumb, and gently pull the controller a few inches out of the chassis.

> If you have difficulty removing the controller module, place your index fingers through the finger holes from the inside (by crossing your arms).

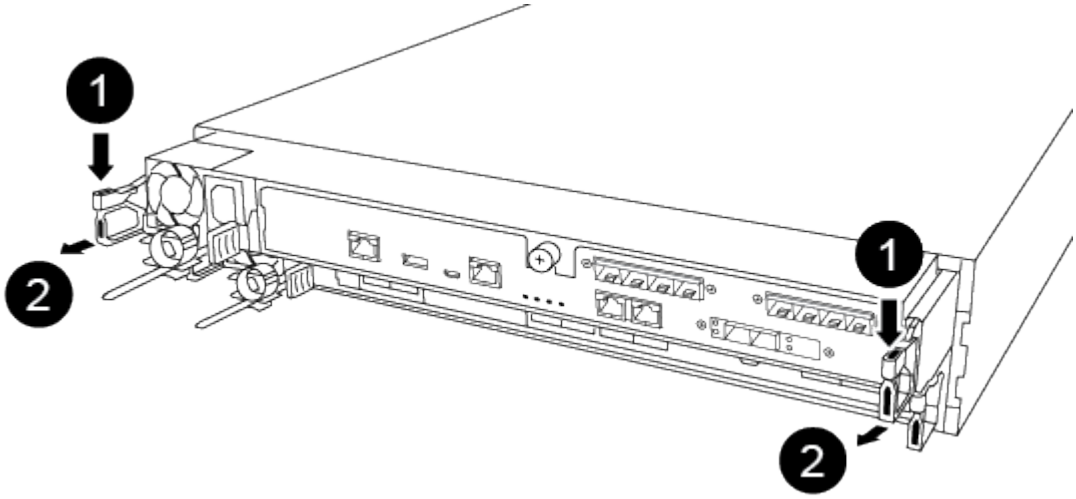

1	Lever
2	Latching mechanism

5. Using both hands, grasp the controller module sides and gently pull it out of the chassis and set it on a flat, stable surface.
6. Turn the thumbscrew on the front of the controller module anti-clockwise and open the controller module cover.

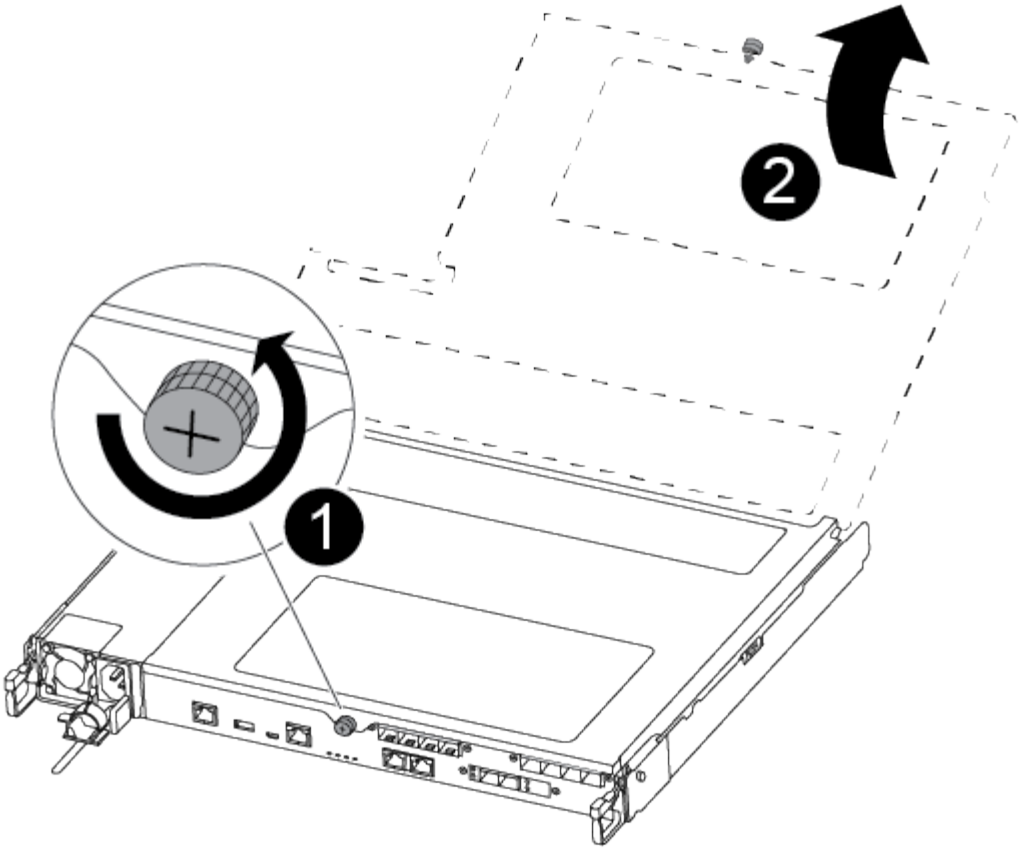

1	Thumbscrew
2	Controller module cover.

7. Lift out the air duct cover.

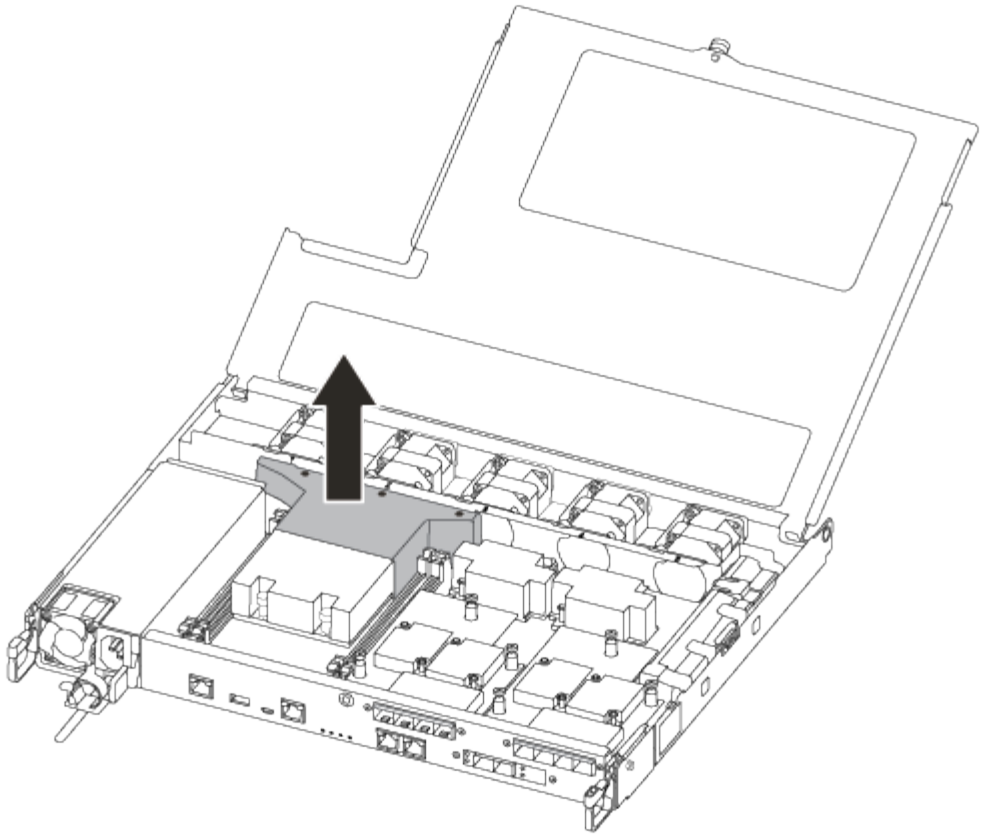

Step 2: Move the power supply

You must move the power supply from the impaired controller module to the replacement controller module when you replace a controller module.

1. Disconnect the power supply.
2. Open the power cable retainer, and then unplug the power cable from the power supply.
3. Unplug the power cable from the power source.
4. Rotate the cam handle such that it can be used to pull power supply out of the controller module while pressing the locking tab.

> Do not use excessive force when sliding the controller module into the chassis to avoid damaging the connectors.

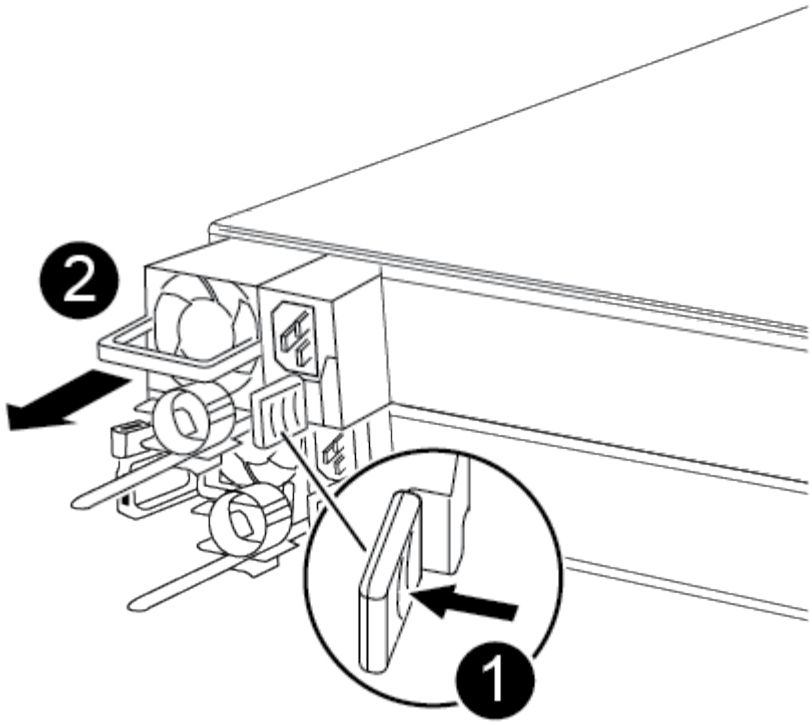

1	Blue power supply locking tab
2	Power supply

5. Move the power supply to the new controller module, and then install it.
6. Using both hands, support and align the edges of the power supply with the opening in the controller module, and then gently push the power supply into the controller module until the locking tab clicks into place.

   The power supplies will only properly engage with the internal connector and lock in place one way.

   > To avoid damaging the internal connector, do not use excessive force when sliding the power supply into the system.

Step 3: Move the fans

You must move the fans from the impaired controller module to the replacement module when replacing a failed controller module.

1. Remove the fan module by pinching the side of the fan module, and then lifting the fan module straight out of the controller module.

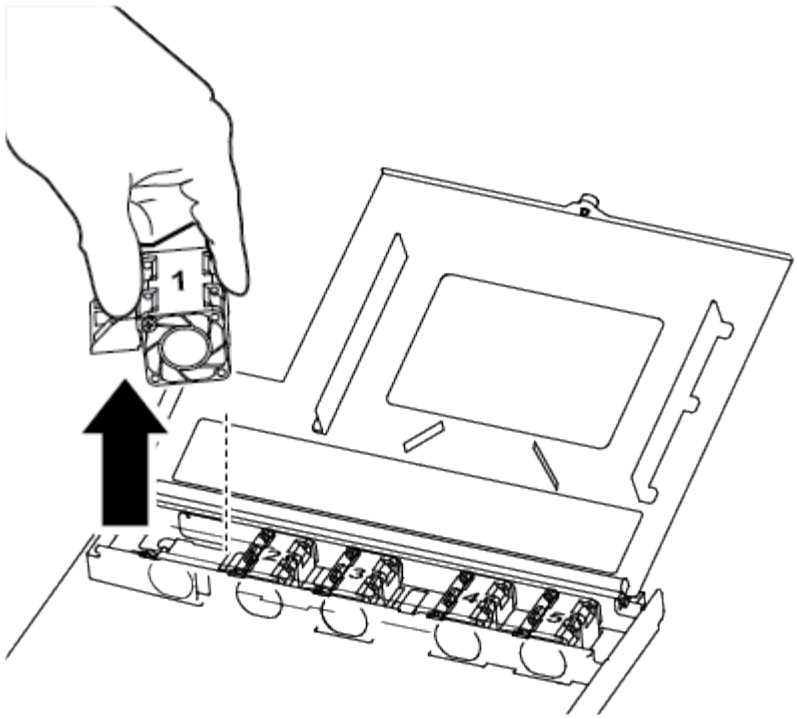

1	Fan module

2. Move the fan module to the replacement controller module, and align the edges of the fan module with the opening in the controller module, and then slide the fan module in.
3. Repeat these steps for the remaining fan modules.

Step 4: Move the boot media

There is one boot media device in the AFF A250 under the air duct in the controller module. You must move it from the impaired controller module to the replacement controller module.

You need a #1 magnetic Phillips head screwdriver to remove the screw that holds the boot media in place. Due to the space constraints within the controller module, you should also have a magnet to transfer the screw on to so that you do not lose it.

1. Locate and move the boot media from the impaired controller module to the replacement controller module.

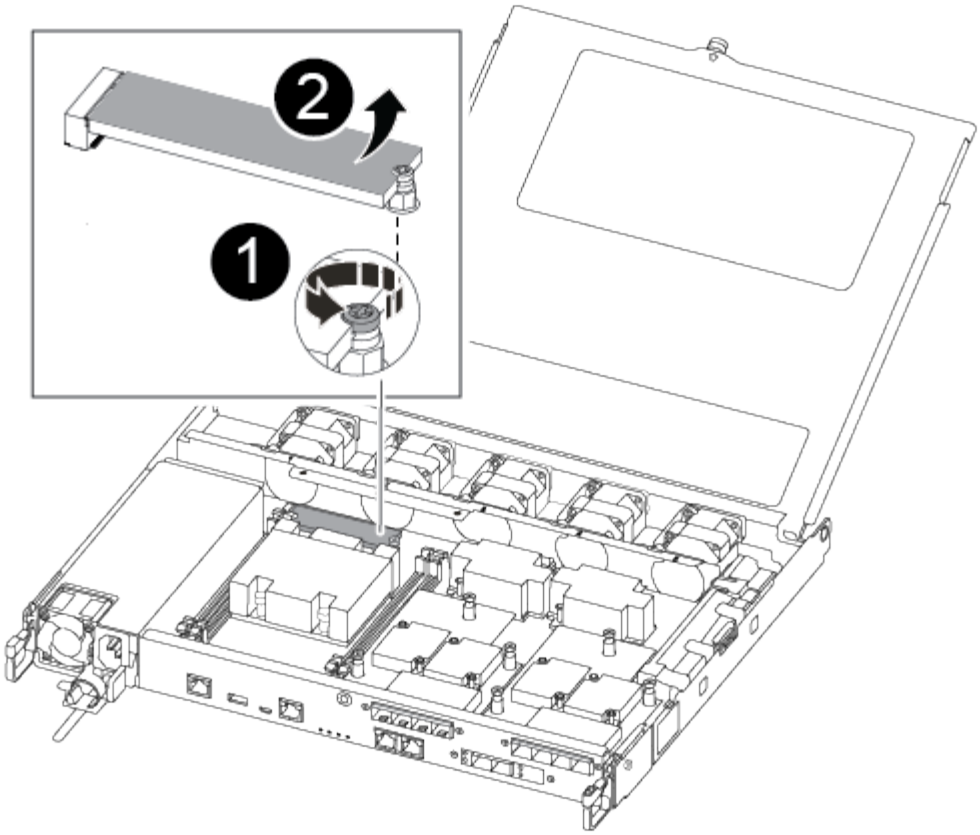

1	Remove the screw securing the boot media to the motherboard in the impaired controller module.
2	Lift the boot media out of the impaired controller module.

a. Using the #1 magnetic screwdriver, remove the screw from the boot media, and set it aside safely on the magnet.

b. Gently lift the boot media directly out of the socket and align it into place in the replacement controller module.

c. Using the #1 magnetic screwdriver, insert and tighten the screw on the boot media.

> Do not apply force when tightening the screw on the boot media; you might crack it.

Step 5: Move the DIMMs

To move the DIMMs, locate and move them from the impaired controller into the replacement controller and follow the specific sequence of steps.

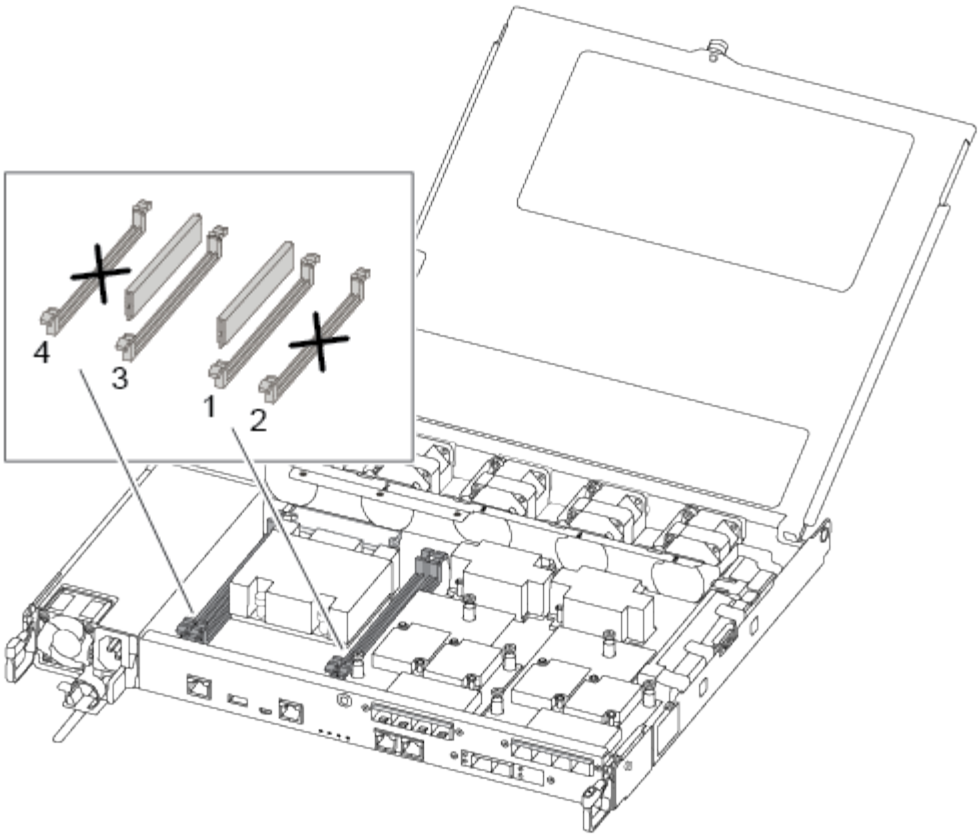

> Install each DIMM into the same slot it occupied in the impaired controller module.

1. Slowly push apart the DIMM ejector tabs on either side of the DIMM, and slide the DIMM out of the slot.

   > Hold the DIMM by the edges to avoid pressure on the components on the DIMM circuit board.

2. Locate the corresponding DIMM slot on the replacement controller module.
3. Make sure that the DIMM ejector tabs on the DIMM socket are in the open position, and then insert the DIMM squarely into the socket.

   The DIMMs fit tightly in the socket. If not, reinsert the DIMM to realign it with the socket.

4. Visually inspect the DIMM to verify that it is evenly aligned and fully inserted into the socket.
5. Repeat these steps for the remaining DIMM.

Step 6: Move a mezzanine card

To move a mezzanine card, you must remove the cabling and any QSFPs and SFPs from the ports, move the mezzanine card to the replacement controller, reinstall any QSFPs and SFPs onto the ports, and cable the ports.

1. Locate and move the mezzanine cards from your impaired controller module.

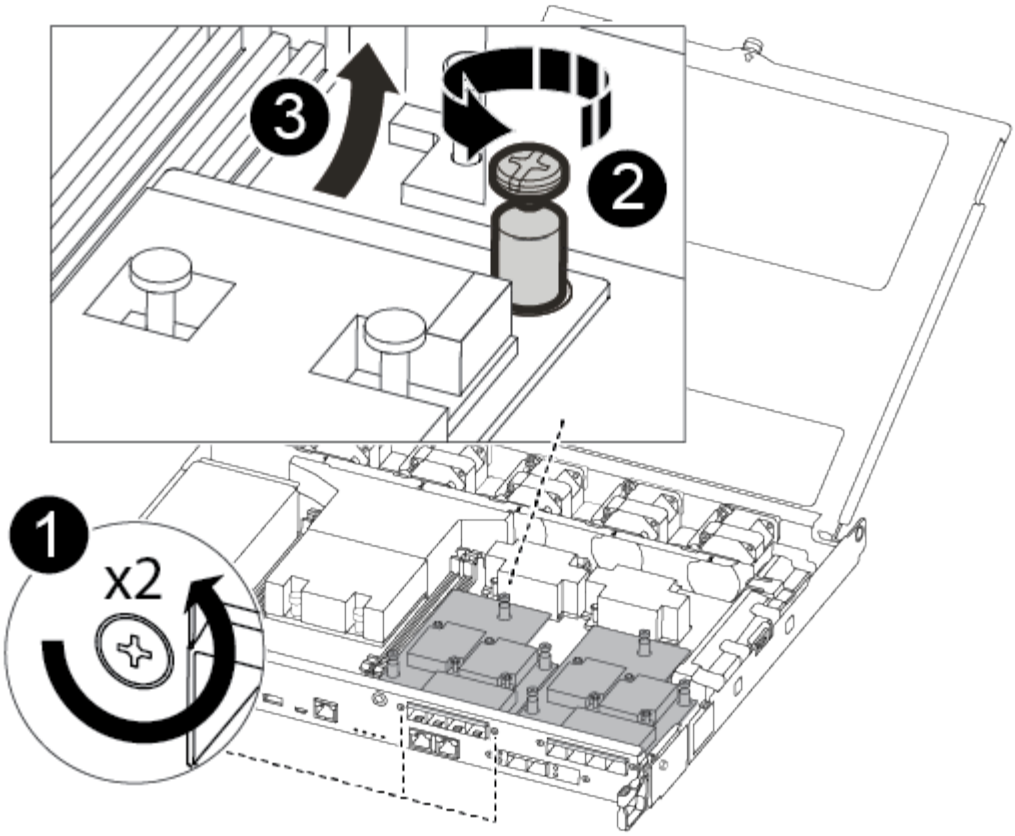

1	Remove screws on the face of the controller module.
2	Loosen the screw in the controller module.
3	Move the mezzanine card.

2. Unplug any cabling associated with the mezzanine card.

   Make sure that you label the cables so that you know where they came from.

   a. Remove any SFP or QSFP modules that might be in the mezzanine card and set it aside.
   b. Using the #1 magnetic screwdriver, remove the screws from the face of the impaired controller module and from the mezzanine card, and set them aside safely on the magnet.
   c. Gently lift the mezzanine card out of the socket and move it to the same position in the replacement controller.
   d. Gently align the mezzanine card into place in the replacement controller.
   e. Using the #1 magnetic screwdriver, insert and tighten the screws on the face of the replacement controller module and on the mezzanine card.

   > Do not apply force when tightening the screw on the mezzanine card; you might crack it.

3. Repeat these steps if there is another mezzanine card in the impaired controller module.

4. Insert the SFP or QSFP modules that were removed onto the mezzanine card.

Step 7: Move the NV battery

When replacing the controller module, you must move the NV battery from the impaired controller module to the replacement controller module.

1. Locate and move the NVMEM battery from your impaired controller module to the replacement controller module.

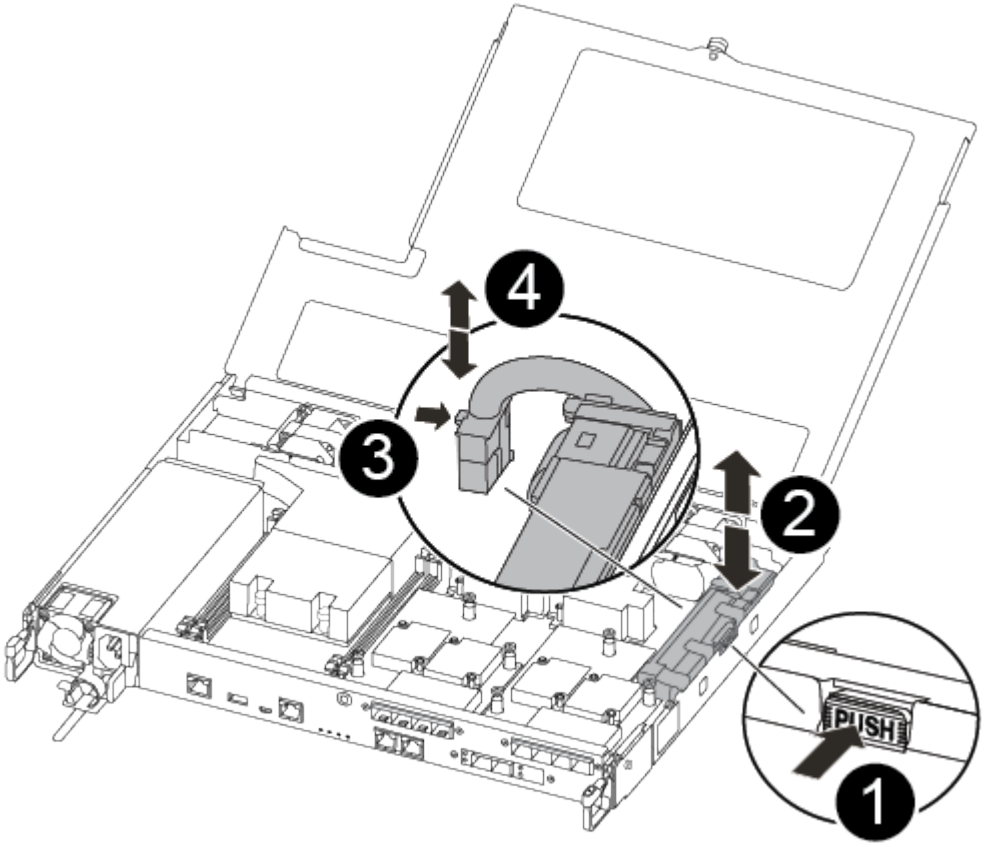

1	Squeeze the clip on the face of the battery plug.
2	Unplug the battery cable from the socket.
3	Grasp the battery and press the blue locking tab marked PUSH.
4	Lift the battery out of the holder and controller module.

2. Locate the battery plug and squeeze the clip on the face of the battery plug to release the plug from the socket.
3. Grasp the battery and press the blue locking tab marked PUSH, and then lift the battery out of the holder and controller module.

4. Locate the corresponding NV battery holder on the replacement controller module and align the NV battery to the battery holder.
5. Insert the NV battery plug into the socket.
6. Slide the battery pack down along the sheet metal side wall until the support tabs on the side wall hook into the slots on the battery pack, and the battery pack latch engages and clicks into the opening on the side wall.
7. Press firmly down on the battery pack to make sure that it is locked into place.

Step 8: Install the controller module

After all of the components have been moved from the impaired controller module to the replacement controller module, you must install the replacement controller module into the chassis, and then boot it to Maintenance mode.

You can use the following illustration or the written steps to install the replacement controller module in the chassis.

1. If you have not already done so, install the air duct.

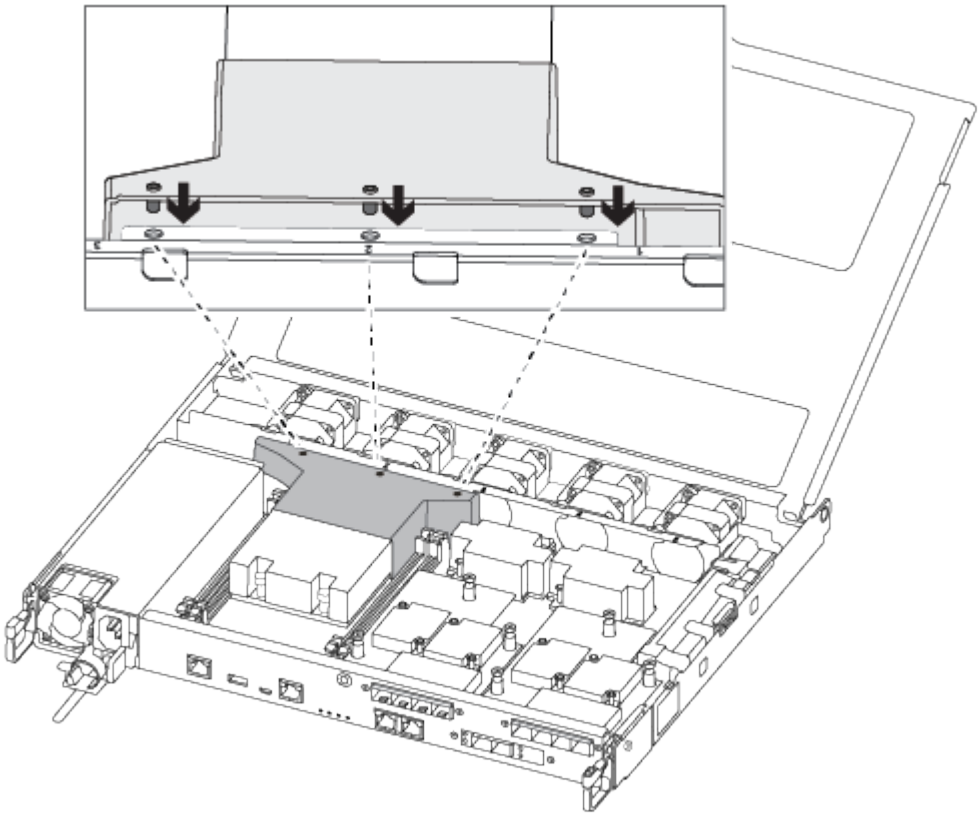

2. Close the controller module cover and tighten the thumbscrew.

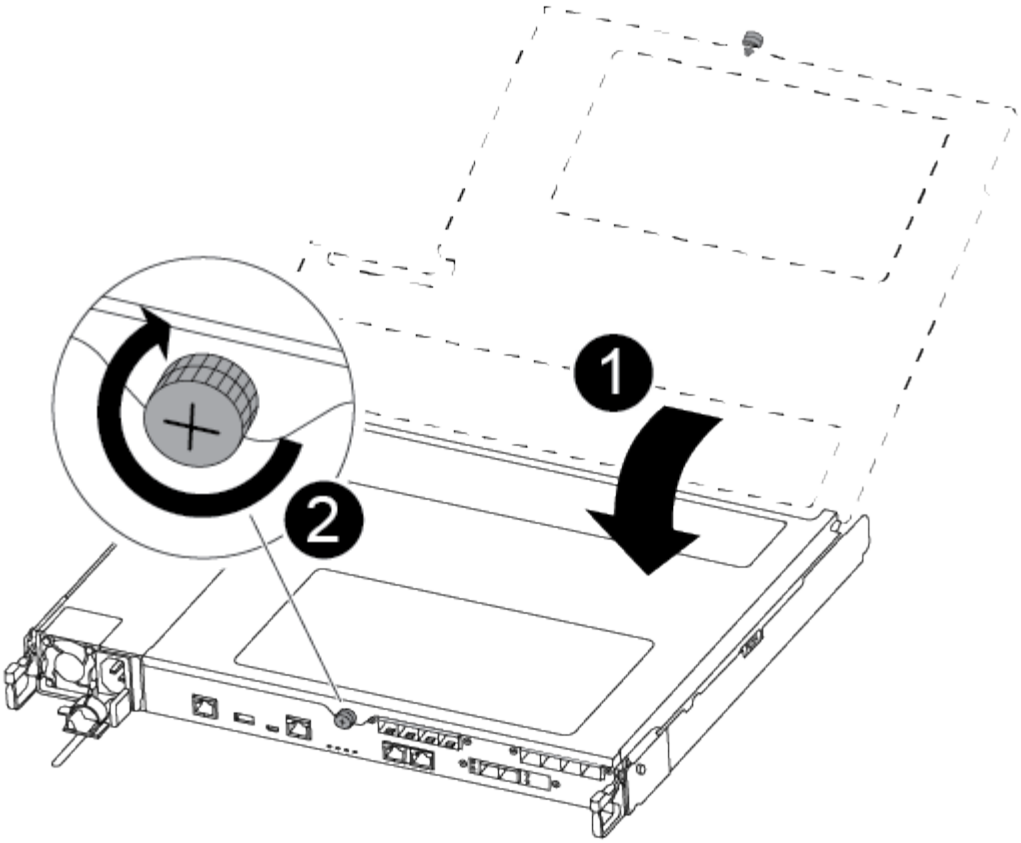

1	Controller module cover
2	Thumbscrew

3. Align the end of the controller module with the opening in the chassis, and then gently push the controller module halfway into the system.

   Do not completely insert the controller module in the chassis until instructed to do so.

4. Cable the management and console ports only, so that you can access the system to perform the tasks in the following sections.

   You will connect the rest of the cables to the controller module later in this procedure.

5. Insert the controller module into the chassis.
6. Ensure the latching mechanism arms are locked in the fully extended position.
7. Using both hands, align and gently slide the controller module into the latching mechanism arms until it stops.
8. Place your index fingers through the finger holes from the inside of the latching mechanism.
9. Press your thumbs down on the orange tabs on top of the latching mechanism and gently push the controller module over the stop.
10. Release your thumbs from the top of the latching mechanisms and continue pushing until the latching

mechanisms snap into place.

The controller module begins to boot as soon as it is fully seated in the chassis. Be prepared to interrupt the boot process.

The controller module should be fully inserted and flush with the edges of the chassis.

Restore and verify the system configuration - FAS500f

After completing the hardware replacement and booting to Maintenance mode, you verify the low-level system configuration of the replacement controller and reconfigure system settings as necessary.

Step 1: Set and verify system time after replacing the controller

You should check the time and date on the replacement controller module against the healthy controller module in an HA pair, or against a reliable time server in a stand-alone configuration. If the time and date do not match, you must reset them on the replacement controller module to prevent possible outages on clients due to time differences.

About this task

It is important that you apply the commands in the steps on the correct systems:

- The *replacement* node is the new node that replaced the impaired node as part of this procedure.
- The *healthy* node is the HA partner of the *replacement* node.

Steps

1. If the *replacement* node is not at the LOADER prompt, halt the system to the LOADER prompt.
2. On the *healthy* node, check the system time: `cluster date show`

   The date and time are based on the configured timezone.

3. At the LOADER prompt, check the date and time on the *replacement* node: `show date`

   The date and time are given in GMT.

4. If necessary, set the date in GMT on the replacement node: `set date` *`mm/dd/yyyy`*
5. If necessary, set the time in GMT on the replacement node: `set time` *`hh:mm:ss`*
6. At the LOADER prompt, confirm the date and time on the *replacement* node: `show date`

   The date and time are given in GMT.

Step 2: Verify and set the HA state of the chassis

You must verify the `HA` state of the controller module and, if necessary, update the state to match your system configuration.

1. In Maintenance mode from the new controller module, verify that all components display the same `HA` state: `ha-config show`

The HA state should be the same for all components.

2. If the displayed system state of the controller module does not match your system configuration, set the `HA` state for the controller module: `ha-config modify controller ha-state`

   The value for HA-state can be one of the following:

   - ha
   - mcc
   - mccip
   - non-ha

3. If the displayed system state of the controller module does not match your system configuration, set the `HA` state for the controller module: `ha-config modify controller ha-state`
4. Confirm that the setting has changed: `ha-config show`

Recable the system and reassign disks - FAS500f

Continue the replacement procedure by recabling the storage and confirming disk reassignment.

Step 1: Recable the system

Recable the controller module's storage and network connections.

Steps

1. Recable the system.
2. Verify that the cabling is correct by using Active IQ Config Advisor.
   a. Download and install Config Advisor.
   b. Enter the information for the target system, and then click Collect Data.
   c. Click the Cabling tab, and then examine the output. Make sure that all disk shelves are displayed and all disks appear in the output, correcting any cabling issues you find.
   d. Check other cabling by clicking the appropriate tab, and then examining the output from Config Advisor.

Step 2: Reassign disks

If the storage system is in an HA pair, the system ID of the new controller module is automatically assigned to the disks when the giveback occurs at the end of the procedure. You must confirm the system ID change when you boot the *replacement* controller and then verify that the change was implemented.

This procedure applies only to systems running ONTAP in an HA pair.

1. If the *replacement* controller is in Maintenance mode (showing the `*>` prompt, exit Maintenance mode and go to the LOADER prompt: `halt`
2. From the LOADER prompt on the *replacement* controller, boot the controller, entering `y` if you are prompted to override the system ID due to a system ID mismatch:
3. Wait until the `Waiting for giveback…` message is displayed on the *replacement* controller console and

then, from the healthy controller, verify that the new partner system ID has been automatically assigned: `storage failover show`

In the command output, you should see a message that the system ID has changed on the impaired controller, showing the correct old and new IDs. In the following example, node2 has undergone replacement and has a new system ID of 151759706.

```
node1> `storage failover show`
                                     Takeover
Node              Partner            Possible     State Description
------------      ------------       --------
-------------------------------------
node1             node2              false        System ID changed on
partner (Old:
                                                   151759755, New:
151759706), In takeover
node2             node1              -            Waiting for giveback
(HA mailboxes)
```

4. From the healthy controller, verify that any coredumps are saved:
   a. Change to the advanced privilege level: `set -privilege advanced`

      You can respond `Y` when prompted to continue into advanced mode. The advanced mode prompt appears (*>).

   b. Save any coredumps: `system node run -node` *`local-node-name`* `partner savecore`
   c. Wait for the `savecore`command to complete before issuing the giveback.

      You can enter the following command to monitor the progress of the savecore command: `system node run -node` *`local-node-name`* `partner savecore -s`

   d. Return to the admin privilege level: `set -privilege admin`
5. If your storage system has Storage or Volume Encryption configured, you must restore Storage or Volume Encryption functionality by using one of the following procedures, depending on whether you are using onboard or external key management:
   - Restore onboard key management encryption keys
   - Restore external key management encryption keys
6. Give back the controller:
   a. From the healthy controller, give back the replaced controller's storage: `storage failover giveback -ofnode` *`replacement_node_name`*

      The *replacement* controller takes back its storage and completes booting.

      If you are prompted to override the system ID due to a system ID mismatch, you should enter `y`.

      > If the giveback is vetoed, you can consider overriding the vetoes.

Find the High-Availability Configuration content for your version of ONTAP 9

b. After the giveback has been completed, confirm that the HA pair is healthy and that takeover is possible: `storage failover show`

   The output from the `storage failover show` command should not include the System ID changed on partner message.

7. Verify that the disks were assigned correctly: `storage disk show -ownership`

   The disks belonging to the *replacement* controller should show the new system ID. In the following example, the disks owned by node1 now show the new system ID, 1873775277:

```
node1> `storage disk show -ownership`

Disk  Aggregate Home  Owner  DR Home  Home ID    Owner ID  DR Home ID
Reserver  Pool
----- ------    ----- ------ -------- -------    -------    -------
---------  ---
1.0.0  aggr0_1  node1 node1  -        1873775277 1873775277  -
1873775277 Pool0
1.0.1  aggr0_1  node1 node1           1873775277 1873775277  -
1873775277 Pool0
.
.
.
```

8. If the system is in a MetroCluster configuration, monitor the status of the controller: `metrocluster node show`

   The MetroCluster configuration takes a few minutes after the replacement to return to a normal state, at which time each controller will show a configured state, with DR Mirroring enabled and a mode of normal. The `metrocluster node show -fields node-systemid` command output displays the old system ID until the MetroCluster configuration returns to a normal state.

9. If the controller is in a MetroCluster configuration, depending on the MetroCluster state, verify that the DR home ID field shows the original owner of the disk if the original owner is a controller on the disaster site.

   This is required if both of the following are true:

   - The MetroCluster configuration is in a switchover state.
   - The *replacement* controller is the current owner of the disks on the disaster site.

   Disk ownership changes during HA takeover and MetroCluster switchover in a four-node MetroCluster configuration

10. If your system is in a MetroCluster configuration, verify that each controller is configured: `metrocluster node show - fields configuration-state`

```
node1_siteA::> metrocluster node show -fields configuration-state

dr-group-id            cluster node           configuration-state
-----------            ---------------------- --------------
-------------------
1 node1_siteA          node1mcc-001           configured
1 node1_siteA          node1mcc-002           configured
1 node1_siteB          node1mcc-003           configured
1 node1_siteB          node1mcc-004           configured

4 entries were displayed.
```

11. Verify that the expected volumes are present for each controller: `vol show -node node-name`
12. If you disabled automatic takeover on reboot, enable it from the healthy controller: `storage failover modify -node replacement-node-name -onreboot true`

Complete system restoration - FAS500f

To restore your system to full operation, you must restore the NetApp Storage Encryption configuration (if necessary), and install licenses for the new controller, and return the failed part to NetApp, as described in the RMA instructions shipped with the kit.

Step 1: Install licenses for the replacement controller in ONTAP

You must install new licenses for the *replacement* node if the impaired node was using ONTAP features that require a standard (node-locked) license. For features with standard licenses, each node in the cluster should have its own key for the feature.

About this task

Until you install license keys, features requiring standard licenses continue to be available to the *replacement* node. However, if the impaired node was the only node in the cluster with a license for the feature, no configuration changes to the feature are allowed. Also, using unlicensed features on the node might put you out of compliance with your license agreement, so you should install the replacement license key or keys on the *replacement* node as soon as possible.

Before you begin

The licenses keys must be in the 28-character format.

You have a 90-day grace period in which to install the license keys. After the grace period, all old licenses are invalidated. After a valid license key is installed, you have 24 hours to install all of the keys before the grace period ends.

Steps

1. If you need new license keys, obtain replacement license keys on the NetApp Support Site in the My Support section under Software licenses.

> The new license keys that you require are automatically generated and sent to the email address on file. If you fail to receive the email with the license keys within 30 days, you should contact technical support.

2. Install each license key: `system license add -license-code license-key, license-key...`
3. Remove the old licenses, if desired:
   a. Check for unused licenses: `license clean-up -unused -simulate`
   b. If the list looks correct, remove the unused licenses: `license clean-up -unused`

Step 2: Verify LIFs and registering the serial number

Before returning the *replacement* node to service, you should verify that the LIFs are on their home ports, and register the serial number of the *replacement* node if AutoSupport is enabled, and reset automatic giveback.

Steps

1. Verify that the logical interfaces are reporting to their home server and ports: `network interface show -is-home false`

   If any LIFs are listed as false, revert them to their home ports: `network interface revert -vserver * -lif *`

2. Register the system serial number with NetApp Support.
   - If AutoSupport is enabled, send an AutoSupport message to register the serial number.
   - If AutoSupport is not enabled, call NetApp Support to register the serial number.
3. If an AutoSupport maintenance window was triggered, end it by using the `system node autosupport invoke -node * -type all -message MAINT=END` command.
4. If automatic giveback was disabled, reenable it: `storage failover modify -node local -auto -giveback true`

Step 3: Return the failed part to NetApp

Return the failed part to NetApp, as described in the RMA instructions shipped with the kit. See the Part Return & Replacements page for further information.

Copyright information

Copyright © 2024 NetApp, Inc. All Rights Reserved. Printed in the U.S. No part of this document covered by copyright may be reproduced in any form or by any means—graphic, electronic, or mechanical, including photocopying, recording, taping, or storage in an electronic retrieval system—without prior written permission of the copyright owner.

Software derived from copyrighted NetApp material is subject to the following license and disclaimer:

THIS SOFTWARE IS PROVIDED BY NETAPP “AS IS” AND WITHOUT ANY EXPRESS OR IMPLIED WARRANTIES, INCLUDING, BUT NOT LIMITED TO, THE IMPLIED WARRANTIES OF MERCHANTABILITY AND FITNESS FOR A PARTICULAR PURPOSE, WHICH ARE HEREBY DISCLAIMED. IN NO EVENT SHALL NETAPP BE LIABLE FOR ANY DIRECT, INDIRECT, INCIDENTAL, SPECIAL, EXEMPLARY, OR CONSEQUENTIAL DAMAGES (INCLUDING, BUT NOT LIMITED TO, PROCUREMENT OF SUBSTITUTE GOODS OR SERVICES; LOSS OF USE, DATA, OR PROFITS; OR BUSINESS INTERRUPTION) HOWEVER CAUSED AND ON ANY THEORY OF LIABILITY, WHETHER IN CONTRACT, STRICT LIABILITY, OR TORT (INCLUDING NEGLIGENCE OR OTHERWISE) ARISING IN ANY WAY OUT OF THE USE OF THIS SOFTWARE, EVEN IF ADVISED OF THE POSSIBILITY OF SUCH DAMAGE.

NetApp reserves the right to change any products described herein at any time, and without notice. NetApp assumes no responsibility or liability arising from the use of products described herein, except as expressly agreed to in writing by NetApp. The use or purchase of this product does not convey a license under any patent rights, trademark rights, or any other intellectual property rights of NetApp.

The product described in this manual may be protected by one or more U.S. patents, foreign patents, or pending applications.

LIMITED RIGHTS LEGEND: Use, duplication, or disclosure by the government is subject to restrictions as set forth in subparagraph (b)(3) of the Rights in Technical Data -Noncommercial Items at DFARS 252.227-7013 (FEB 2014) and FAR 52.227-19 (DEC 2007).

Data contained herein pertains to a commercial product and/or commercial service (as defined in FAR 2.101) and is proprietary to NetApp, Inc. All NetApp technical data and computer software provided under this Agreement is commercial in nature and developed solely at private expense. The U.S. Government has a non-exclusive, non-transferrable, nonsublicensable, worldwide, limited irrevocable license to use the Data only in connection with and in support of the U.S. Government contract under which the Data was delivered. Except as provided herein, the Data may not be used, disclosed, reproduced, modified, performed, or displayed without the prior written approval of NetApp, Inc. United States Government license rights for the Department of Defense are limited to those rights identified in DFARS clause 252.227-7015(b) (FEB 2014).

Trademark information

NETAPP, the NETAPP logo, and the marks listed at http://www.netapp.com/TM are trademarks of NetApp, Inc. Other company and product names may be trademarks of their respective owners.