Boot media

Install and maintain

NetApp
March 22, 2024

This PDF was generated from https://docs.netapp.com/us-en/ontap-systems/fas9000/bootmedia-replace-overview.html on March 22, 2024. Always check docs.netapp.com for the latest.

Table of Contents

Boot media . . . 1
Overview of boot media replacement - FAS9000 . . . 1
Check onboard encryption keys . . . 1
Shut down the impaired controller - FAS9000 . . . 8
Replace the boot media - FAS9000 . . . 10
Boot the recovery image - FAS9000 . . . 14
Switch back aggregates in a two-node MetroCluster configuration - FAS9000 . . . 18
Restore OKM, NSE, and NVE as needed - FAS9000 . . . 19
Return the failed part to NetApp - FAS9000 . . . 25

Boot media

Overview of boot media replacement - FAS9000

The boot media stores a primary and secondary set of system (boot image) files that the system uses when it boots. Depending on your network configuration, you can perform either a nondisruptive or disruptive replacement.

You must have a USB flash drive, formatted to FAT32, with the appropriate amount of storage to hold the `image_xxx.tgz`.

You also must copy the `image_xxx.tgz` file to the USB flash drive for later use in this procedure.

- The nondisruptive and disruptive methods for replacing a boot media both require you to restore the `var` file system:
  - For nondisruptive replacement, the HA pair does not require connection to a network to restore the `var` file system. The HA pair in a single chassis has an internal e0S connection, which is used to transfer `var` config between them.
  - For disruptive replacement, you do not need a network connection to restore the `var` file system, but the process requires two reboots.
- You must replace the failed component with a replacement FRU component you received from your provider.
- It is important that you apply the commands in these steps on the correct node:
  - The *impaired* node is the node on which you are performing maintenance.
  - The *healthy node* is the HA partner of the impaired node.

Check onboard encryption keys

Prior to shutting down the impaired controller and checking the status of the onboard encryption keys, you must check the status of the impaired controller, disable automatic giveback, and check which version of ONTAP is running on the system.

If you have a cluster with more than two nodes, it must be in quorum. If the cluster is not in quorum or a healthy controller shows false for eligibility and health, you must correct the issue before shutting down the impaired controller; see the Synchronize a node with the cluster.

Steps

1. Check the status of the impaired controller:
   - If the impaired controller is at the login prompt, log in as `admin`.
   - If the impaired controller is at the LOADER prompt and is part of HA configuration, log in as `admin` on the healthy controller.
   - If the impaired controller is in a standalone configuration and at LOADER prompt, contact mysupport.netapp.com.
2. If AutoSupport is enabled, suppress automatic case creation by invoking an AutoSupport message:
   `system node autosupport invoke -node * -type all -message`

`MAINT=number_of_hours_downh`

The following AutoSupport message suppresses automatic case creation for two hours: `cluster1:*> system node autosupport invoke -node * -type all -message MAINT=2h`

3. Check the version of ONTAP the system is running on the impaired controller if up, or on the partner controller if the impaired controller is down, using the `version -v` command:
   - If <Ino-DARE> or <1Ono-DARE> is displayed in the command output, the system does not support NVE, proceed to shut down the controller.
   - If <Ino-DARE> is not displayed in the command output, and the system is running ONTAP 9.5, go to Option 1: Check NVE or NSE on systems running ONTAP 9.5 and earlier.
   - If <Ino-DARE> is not displayed in the command output, and the system is running ONTAP 9.6 or later, go to Option 2: Check NVE or NSE on systems running ONTAP 9.6 and later.
4. If the impaired node is part of an HA configuration, disable automatic giveback from the healthy node: `storage failover modify -node local -auto-giveback false` or `storage failover modify -node local -auto-giveback-after-panic false`

Option 1: Check NVE or NSE on systems running ONTAP 9.5 and earlier

Before shutting down the impaired controller, you need to check whether the system has either NetApp Volume Encryption (NVE) or NetApp Storage Encryption (NSE) enabled. If so, you need to verify the configuration.

Steps

1. Connect the console cable to the impaired controller.
2. Check whether NVE is configured for any volumes in the cluster: `volume show -is-encrypted true`

   If any volumes are listed in the output, NVE is configured and you need to verify the NVE configuration. If no volumes are listed, check whether NSE is configured.

3. Check whether NSE is configured: `storage encryption disk show`
   - If the command output lists the drive details with Mode & Key ID information, NSE is configured and you need to verify the NSE configuration.
   - If NVE and NSE are not configured, it's safe to shut down the impaired controller.

Verify NVE configuration

Steps

1. Display the key IDs of the authentication keys that are stored on the key management servers: `security key-manager query`
   - If the `Restored` column displays `yes` and all key managers display `available`, it's safe to shut down the impaired controller.
   - If the `Restored` column displays anything other than `yes`, or if any key manager displays `unavailable`, you need to complete some additional steps.
   - If you see the message This command is not supported when onboard key management is enabled, you need to complete some other additional steps.
2. If the `Restored` column displayed anything other than `yes`, or if any key manager displayed `unavailable`:

a. Retrieve and restore all authentication keys and associated key IDs: `security key-manager restore -address *`

   If the command fails, contact NetApp Support.

   mysupport.netapp.com

b. Verify that the `Restored` column displays `yes` for all authentication keys and that all key managers display `available`: `security key-manager query`

c. Shut down the impaired controller.

3. If you saw the message This command is not supported when onboard key management is enabled, display the keys stored in the onboard key manager: `security key-manager key show -detail`

   a. If the `Restored` column displays `yes` manually back up the onboard key management information:

      - Go to advanced privilege mode and enter `y` when prompted to continue: `set -priv advanced`
      - Enter the command to display the OKM backup information: `security key-manager backup show`
      - Copy the contents of the backup information to a separate file or your log file. You'll need it in disaster scenarios where you might need to manually recover OKM.
      - Return to admin mode: `set -priv admin`
      - Shut down the impaired controller.

   b. If the `Restored` column displays anything other than `yes`:

      - Run the key-manager setup wizard: `security key-manager setup -node target/impaired node name`

        > Enter the customer's onboard key management passphrase at the prompt. If the passphrase cannot be provided, contact mysupport.netapp.com

      - Verify that the `Restored` column displays `yes` for all authentication key: `security key-manager key show -detail`
      - Go to advanced privilege mode and enter `y` when prompted to continue: `set -priv advanced`
      - Enter the command to display the OKM backup information: `security key-manager backup show`
      - Copy the contents of the backup information to a separate file or your log file. You'll need it in disaster scenarios where you might need to manually recover OKM.
      - Return to admin mode: `set -priv admin`
      - You can safely shutdown the controller.

Verify NSE configuration

Steps

1. Display the key IDs of the authentication keys that are stored on the key management servers: `security key-manager query`

   - If the `Restored` column displays `yes` and all key managers display `available`, it's safe to shut down the impaired controller.

- If the `Restored` column displays anything other than `yes`, or if any key manager displays `unavailable`, you need to complete some additional steps.
- If you see the message This command is not supported when onboard key management is enabled, you need to complete some other additional steps

2. If the `Restored` column displayed anything other than `yes`, or if any key manager displayed `unavailable`:
   a. Retrieve and restore all authentication keys and associated key IDs: `security key-manager restore -address *`

      If the command fails, contact NetApp Support.

      mysupport.netapp.com

   b. Verify that the `Restored` column displays `yes` for all authentication keys and that all key managers display `available`: `security key-manager query`
   c. Shut down the impaired controller.
3. If you saw the message This command is not supported when onboard key management is enabled, display the keys stored in the onboard key manager: `security key-manager key show -detail`
   a. If the `Restored` column displays `yes`, manually back up the onboard key management information:
      - Go to advanced privilege mode and enter `y` when prompted to continue: `set -priv advanced`
      - Enter the command to display the OKM backup information: `security key-manager backup show`
      - Copy the contents of the backup information to a separate file or your log file. You'll need it in disaster scenarios where you might need to manually recover OKM.
      - Return to admin mode: `set -priv admin`
      - Shut down the impaired controller.
   b. If the `Restored` column displays anything other than `yes`:
      - Run the key-manager setup wizard: `security key-manager setup -node target/impaired node name`

        Enter the customer's OKM passphrase at the prompt. If the passphrase cannot be provided, contact mysupport.netapp.com

      - Verify that the `Restored` column shows `yes` for all authentication keys: `security key-manager key show -detail`
      - Go to advanced privilege mode and enter `y` when prompted to continue: `set -priv advanced`
      - Enter the command to back up the OKM information: `security key-manager backup show`

        Make sure that OKM information is saved in your log file. This information will be needed in disaster scenarios where OKM might need to be manually recovered.

      - Copy the contents of the backup information to a separate file or your log. You'll need it in disaster scenarios where you might need to manually recover OKM.

- Return to admin mode: `set -priv admin`
- You can safely shut down the controller.

Option 2: Check NVE or NSE on systems running ONTAP 9.6 and later

Before shutting down the impaired controller, you need to verify whether the system has either NetApp Volume Encryption (NVE) or NetApp Storage Encryption (NSE) enabled. If so, you need to verify the configuration.

1. Verify whether NVE is in use for any volumes in the cluster: `volume show -is-encrypted true`

   If any volumes are listed in the output, NVE is configured and you need to verify the NVE configuration. If no volumes are listed, check whether NSE is configured and in use.

2. Verify whether NSE is configured and in use: `storage encryption disk show`
   - If the command output lists the drive details with Mode & Key ID information, NSE is configured and you need to verify the NSE configuration and in use.
   - If no disks are shown, NSE is not configured.
   - If NVE and NSE are not configured, no drives are protected with NSE keys, it's safe to shut down the impaired controller.

Verify NVE configuration

1. Display the key IDs of the authentication keys that are stored on the key management servers: `security key-manager key query`

   > After the ONTAP 9.6 release, you may have additional key manager types. The types are `KMIP`, `AKV`, and `GCP`. The process for confirming these types is the same as confirming `external` or `onboard` key manager types.

   - If the `Key Manager` type displays `external` and the `Restored` column displays `yes`, it's safe to shut down the impaired controller.
   - If the `Key Manager` type displays `onboard` and the `Restored` column displays `yes`, you need to complete some additional steps.
   - If the `Key Manager` type displays `external` and the `Restored` column displays anything other than `yes`, you need to complete some additional steps.
   - If the `Key Manager` type displays `onboard` and the `Restored` column displays anything other than `yes`, you need to complete some additional steps.

2. If the `Key Manager` type displays `onboard` and the `Restored` column displays `yes`, manually back up the OKM information:
   a. Go to advanced privilege mode and enter `y` when prompted to continue: `set -priv advanced`
   b. Enter the command to display the key management information: `security key-manager onboard show-backup`
   c. Copy the contents of the backup information to a separate file or your log file. You'll need it in disaster scenarios where you might need to manually recover OKM.
   d. Return to admin mode: `set -priv admin`

e. Shut down the impaired controller.

3. If the `Key Manager` type displays `external` and the `Restored` column displays anything other than `yes`:

   a. Restore the external key management authentication keys to all nodes in the cluster: `security key-manager external restore`

      If the command fails, contact NetApp Support.

      mysupport.netapp.com

   b. Verify that the `Restored` column equals `yes` for all authentication keys: `security key-manager key query`

   c. Shut down the impaired controller.

4. If the `Key Manager` type displays `onboard` and the `Restored` column displays anything other than `yes`:

   a. Enter the onboard security key-manager sync command: `security key-manager onboard sync`

      > Enter the customer's 32 character, alphanumeric onboard key management passphrase at the prompt. If the passphrase cannot be provided, contact NetApp Support. mysupport.netapp.com

   b. Verify the `Restored` column shows `yes` for all authentication keys: `security key-manager key query`

   c. Verify that the `Key Manager` type shows `onboard`, and then manually back up the OKM information.

   d. Go to advanced privilege mode and enter `y` when prompted to continue: `set -priv advanced`

   e. Enter the command to display the key management backup information: `security key-manager onboard show-backup`

   f. Copy the contents of the backup information to a separate file or your log file. You'll need it in disaster scenarios where you might need to manually recover OKM.

   g. Return to admin mode: `set -priv admin`

   h. You can safely shut down the controller.

Verify NSE configuration

1. Display the key IDs of the authentication keys that are stored on the key management servers: `security key-manager key query -key-type NSE-AK`

   > After the ONTAP 9.6 release, you may have additional key manager types. The types are `KMIP`, `AKV`, and `GCP`. The process for confirming these types is the same as confirming `external` or `onboard` key manager types.

   - If the `Key Manager` type displays `external` and the `Restored` column displays `yes`, it's safe to shut down the impaired controller.
   - If the `Key Manager` type displays `onboard` and the `Restored` column displays `yes`, you need to complete some additional steps.
   - If the `Key Manager` type displays `external` and the `Restored` column displays anything other than

`yes`, you need to complete some additional steps.

- If the `Key Manager` type displays `external` and the `Restored` column displays anything other than `yes`, you need to complete some additional steps.

2. If the `Key Manager` type displays `onboard` and the `Restored` column displays `yes`, manually back up the OKM information:
   a. Go to advanced privilege mode and enter `y` when prompted to continue: `set -priv advanced`
   b. Enter the command to display the key management information: `security key-manager onboard show-backup`
   c. Copy the contents of the backup information to a separate file or your log file. You'll need it in disaster scenarios where you might need to manually recover OKM.
   d. Return to admin mode: `set -priv admin`
   e. You can safely shut down the controller.
3. If the `Key Manager` type displays `external` and the `Restored` column displays anything other than `yes`:
   a. Restore the external key management authentication keys to all nodes in the cluster: `security key-manager external restore`

      If the command fails, contact NetApp Support.

      mysupport.netapp.com

   b. Verify that the `Restored` column equals `yes` for all authentication keys: `security key-manager key query`
   c. You can safely shut down the controller.
4. If the `Key Manager` type displays `onboard` and the `Restored` column displays anything other than `yes`:
   a. Enter the onboard security key-manager sync command: `security key-manager onboard sync`

      Enter the customer's 32 character, alphanumeric onboard key management passphrase at the prompt. If the passphrase cannot be provided, contact NetApp Support.

      mysupport.netapp.com

   b. Verify the `Restored` column shows `yes` for all authentication keys: `security key-manager key query`
   c. Verify that the `Key Manager` type shows `onboard`, and then manually back up the OKM information.
   d. Go to advanced privilege mode and enter `y` when prompted to continue: `set -priv advanced`
   e. Enter the command to display the key management backup information: `security key-manager onboard show-backup`
   f. Copy the contents of the backup information to a separate file or your log file. You'll need it in disaster scenarios where you might need to manually recover OKM.
   g. Return to admin mode: `set -priv admin`
   h. You can safely shut down the controller.

Shut down the impaired controller - FAS9000

Option 1: Most systems

After completing the NVE or NSE tasks, you need to complete the shutdown of the impaired controller.

Steps

a. Take the impaired controller to the LOADER prompt:

If the impaired controller displays…	Then…
The LOADER prompt	Go to Remove controller module.
`Waiting for giveback…`	Press Ctrl-C, and then respond `y` when prompted.
System prompt or password prompt (enter system password)	Take over or halt the impaired controller from the healthy controller: `storage failover takeover -ofnode impaired_node_name` When the impaired controller shows Waiting for giveback…, press Ctrl-C, and then respond `y`.

b. From the LOADER prompt, enter: `printenv` to capture all boot environmental variables. Save the output to your log file.

> This command may not work if the boot device is corrupted or non-functional.

Option 2: Controller is in a MetroCluster

After completing the NVE or NSE tasks, you need to complete the shutdown of the impaired node. NOTE: Do not use this procedure if your system is in a two-node MetroCluster configuration.

To shut down the impaired controller, you must determine the status of the controller and, if necessary, take over the controller so that the healthy controller continues to serve data from the impaired controller storage.

- If you have a cluster with more than two nodes, it must be in quorum. If the cluster is not in quorum or a healthy controller shows false for eligibility and health, you must correct the issue before shutting down the impaired controller; see Synchronize a node with the cluster.
- If you have a MetroCluster configuration, you must have confirmed that the MetroCluster Configuration State is configured and that the nodes are in an enabled and normal state (`metrocluster node show`).

Steps

1. If AutoSupport is enabled, suppress automatic case creation by invoking an AutoSupport message: `system node autosupport invoke -node * -type all -message MAINT=number_of_hours_downh`

   The following AutoSupport message suppresses automatic case creation for two hours: `cluster1:*> system node autosupport invoke -node * -type all -message MAINT=2h`

2. Disable automatic giveback from the console of the healthy controller: `storage failover modify -node local -auto-giveback false`
3. Take the impaired controller to the LOADER prompt:

If the impaired controller is displaying…	Then…
The LOADER prompt	Go to the next step.
Waiting for giveback…	Press Ctrl-C, and then respond `y` when prompted.
System prompt or password prompt (enter system password)	Take over or halt the impaired controller from the healthy controller: `storage failover takeover -ofnode` *`impaired_node_name`* When the impaired controller shows Waiting for giveback…, press Ctrl-C, and then respond `y`.

Option 3: Controller is in a two-node MetroCluster

After completing the NVE or NSE tasks, you need to complete the shutdown of the impaired node.

Do not use this procedure if your system is in a two-node MetroCluster configuration.

To shut down the impaired controller, you must determine the status of the controller and, if necessary, take over the controller so that the healthy controller continues to serve data from the impaired controller storage.

- If you have a cluster with more than two nodes, it must be in quorum. If the cluster is not in quorum or a healthy controller shows false for eligibility and health, you must correct the issue before shutting down the impaired controller; see Synchronize a node with the cluster.
- If you have a MetroCluster configuration, you must have confirmed that the MetroCluster Configuration State is configured and that the nodes are in an enabled and normal state (`metrocluster node show`).

Steps

1. If AutoSupport is enabled, suppress automatic case creation by invoking an AutoSupport message: `system node autosupport invoke -node * -type all -message MAINT=number_of_hours_downh`

   The following AutoSupport message suppresses automatic case creation for two hours: `cluster1:*> system node autosupport invoke -node * -type all -message MAINT=2h`

2. Disable automatic giveback from the console of the healthy controller: `storage failover modify -node local -auto-giveback false`
3. Take the impaired controller to the LOADER prompt:

If the impaired controller is displaying…	Then…
The LOADER prompt	Go to the next step.
Waiting for giveback…	Press Ctrl-C, and then respond `y` when prompted.
System prompt or password prompt (enter system password)	Take over or halt the impaired controller from the healthy controller: `storage failover takeover -ofnode` *`impaired_node_name`* When the impaired controller shows Waiting for giveback…, press Ctrl-C, and then respond `y`.

Replace the boot media - FAS9000

To replace the boot media, you must remove the impaired controller module, install the replacement boot media, and transfer the boot image to a USB flash drive.

Step 1: Remove the controller

To access components inside the controller, you must first remove the controller module from the system and then remove the cover on the controller module.

Steps

1. If you are not already grounded, properly ground yourself.
2. Unplug the cables from the impaired controller module, and keep track of where the cables were connected.
3. Slide the orange button on the cam handle downward until it unlocks.

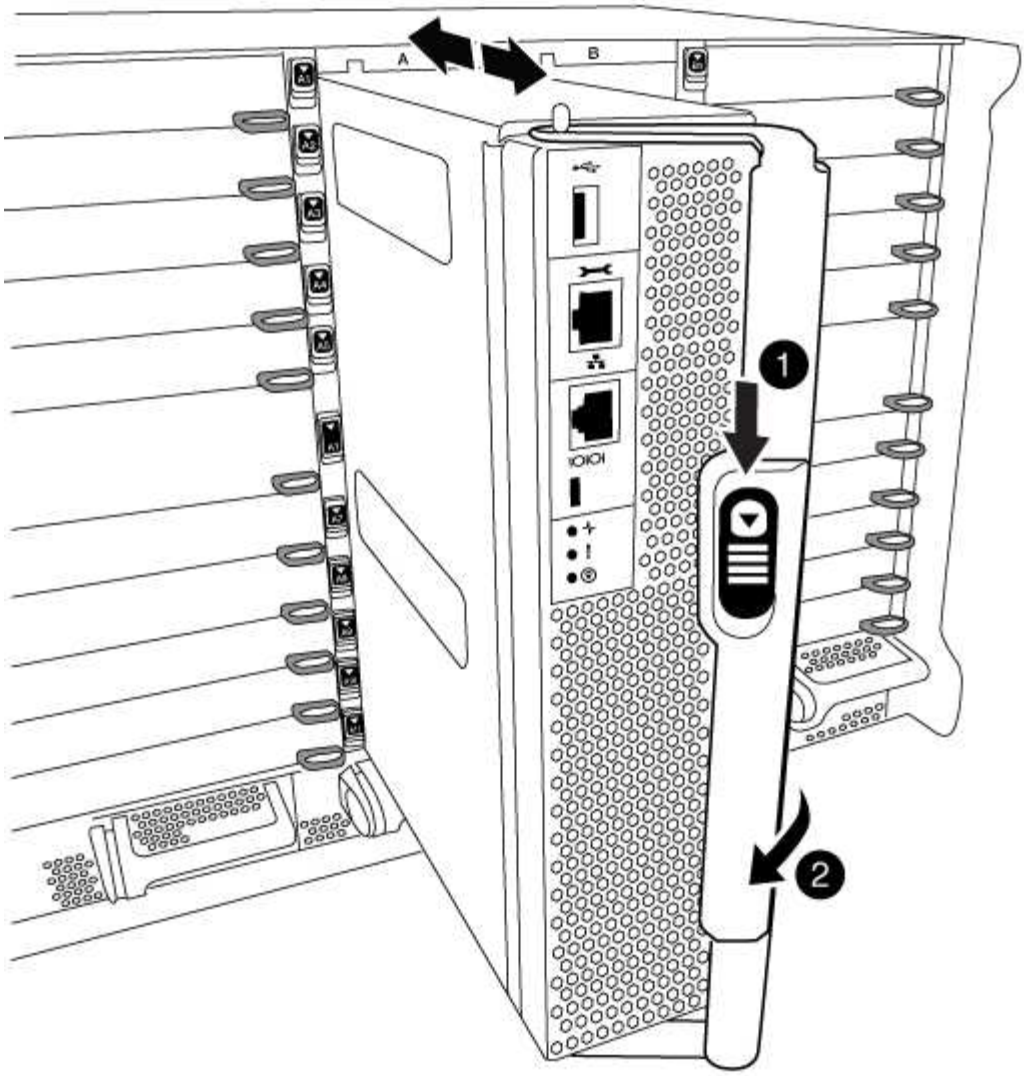

1	Cam handle release button
2	Cam handle

4. Rotate the cam handle so that it completely disengages the controller module from the chassis, and then slide the controller module out of the chassis.

   Make sure that you support the bottom of the controller module as you slide it out of the chassis.

5. Place the controller module lid-side up on a stable, flat surface, press the blue button on the cover, slide the cover to the back of the controller module, and then swing the cover up and lift it off of the controller module.

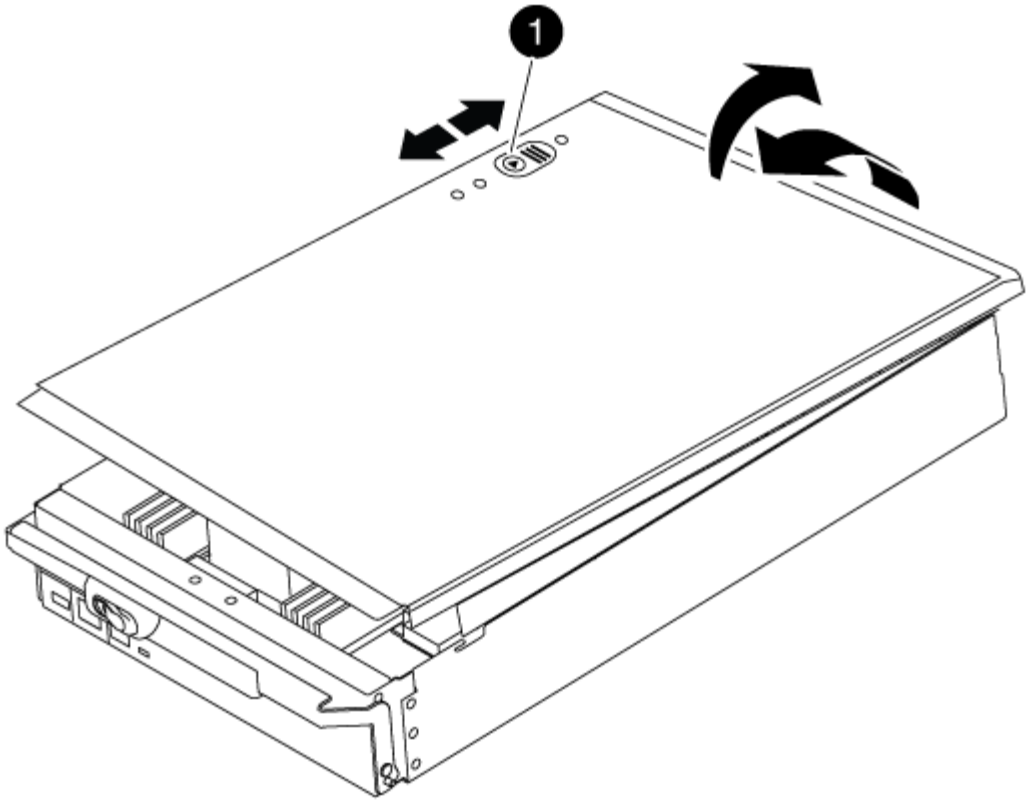

1	Controller module cover locking button

Step 2: Replace the boot media

Locate the boot media using the following illustration or the FRU map on the controller module:

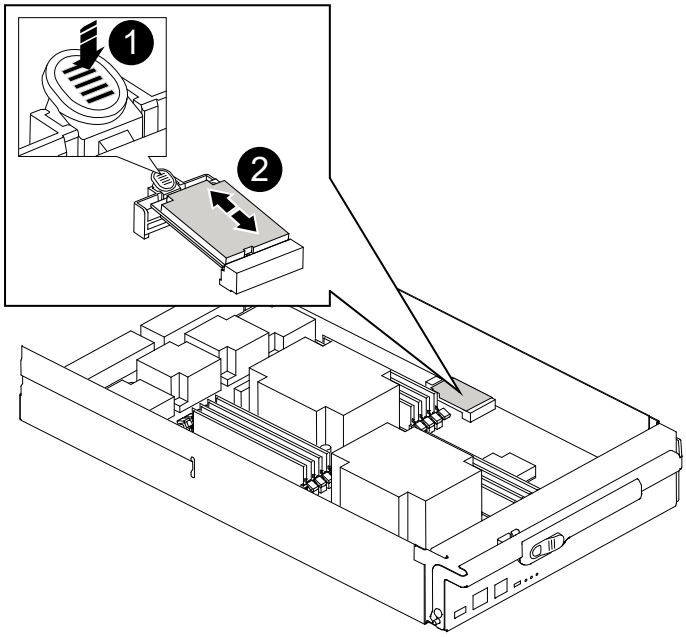

❶	Press release tab
❷	Boot media

1. Press the blue button on the boot media housing to release the boot media from its housing, and then gently pull it straight out of the boot media socket.

   > Do not twist or pull the boot media straight up, because this could damage the socket or the boot media.

2. Align the edges of the replacement boot media with the boot media socket, and then gently push it into the socket.
3. Check the boot media to make sure that it is seated squarely and completely in the socket.

   If necessary, remove the boot media and reseat it into the socket.

4. Push the boot media down to engage the locking button on the boot media housing.
5. Reinstall the controller module lid by aligning the pins on the lid with the slots on the motherboard carrier, and then slide the lid into place.

Step 3: Transfer the boot image to the boot media

You can install the system image to the replacement boot media using a USB flash drive with the image installed on it. However, you must restore the `var` file system during this procedure.

- You must have a USB flash drive, formatted to FAT32, with at least 4GB capacity.
- A copy of the same image version of ONTAP as what the impaired controller was running. You can download the appropriate image from the Downloads section on the NetApp Support Site
  - If NVE is enabled, download the image with NetApp Volume Encryption, as indicated in the download button.
  - If NVE is not enabled, download the image without NetApp Volume Encryption, as indicated in the download button.
- If your system is a stand-alone system you do not need a network connection, but you must perform an additional reboot when restoring the `var` file system.

Steps

1. Align the end of the controller module with the opening in the chassis, and then gently push the controller module halfway into the system.
2. Recable the controller module, as needed.
3. Insert the USB flash drive into the USB slot on the controller module.

   Make sure that you install the USB flash drive in the slot labeled for USB devices, and not in the USB console port.

4. Push the controller module all the way into the system, making sure that the cam handle clears the USB flash drive, firmly push the cam handle to finish seating the controller module, and then push the cam handle to the closed position.

The node begins to boot as soon as it is completely installed into the chassis.

5. Interrupt the boot process to stop at the LOADER prompt by pressing Ctrl-C when you see Starting AUTOBOOT press Ctrl-C to abort….

   If you miss this message, press Ctrl-C, select the option to boot to Maintenance mode, and then halt the node to boot to LOADER.

6. Set your network connection type at the LOADER prompt:

   - If you are configuring DHCP: `ifconfig e0a -auto`

     > The target port you configure is the target port you use to communicate with the impaired node from the healthy node during `var` file system restore with a network connection. You can also use the e0M port in this command.

   - If you are configuring manual connections: `ifconfig e0a -addr=filer_addr -mask=netmask -gw=gateway-dns=dns_addr-domain=dns_domain`
     - filer_addr is the IP address of the storage system.
     - netmask is the network mask of the management network that is connected to the HA partner.
     - gateway is the gateway for the network.
     - dns_addr is the IP address of a name server on your network.
     - dns_domain is the Domain Name System (DNS) domain name.

       If you use this optional parameter, you do not need a fully qualified domain name in the netboot server URL. You need only the server's host name.

   > Other parameters might be necessary for your interface. You can enter `help ifconfig` at the firmware prompt for details.

7. If the controller is in a stretch or fabric-attached MetroCluster, you must restore the FC adapter configuration:

   a. Boot to Maintenance mode: `boot_ontap maint`
   b. Set the MetroCluster ports as initiators: `ucadmin modify -m fc -t` *`initiator adapter_name`*
   c. Halt to return to Maintenance mode: `halt`

   The changes will be implemented when the system is booted.

Boot the recovery image - FAS9000

The procedure for booting the impaired node from the recovery image depends on whether the system is in a two-node MetroCluster configuration.

Option 1: Boot the recovery image in most systems

You must boot the ONTAP image from the USB drive, restore the file system, and verify the environmental variables.

This procedure applies to systems that are not in a two-node MetroCluster configuration.

Steps

1. From the LOADER prompt, boot the recovery image from the USB flash drive: `boot_recovery`

   The image is downloaded from the USB flash drive.

2. When prompted, either enter the name of the image or accept the default image displayed inside the brackets on your screen.
3. Restore the `var` file system:

If your system has…	Then…
A network connection	a. Press `y` when prompted to restore the backup configuration. b. Set the healthy node to advanced privilege level: `set -privilege advanced` c. Run the restore backup command: `system node restore-backup -node local -target-address` *`impaired_node_IP_address`* d. Return the node to admin level: `set -privilege admin` e. Press `y` when prompted to use the restored configuration. f. Press `y` when prompted to reboot the node.
No network connection	a. Press `n` when prompted to restore the backup configuration. b. Reboot the system when prompted by the system. c. Select the **Update flash from backup config** (sync flash) option from the displayed menu. If you are prompted to continue with the update, press `y`.

If your system has…	Then…

No network connection and is in a MetroCluster IP configuration	a. Press `n` when prompted to restore the backup configuration.
	b. Reboot the system when prompted by the system.
	c. Wait for the iSCSI storage connections to connect.
	You can proceed after you see the following messages:
	`date-and-time [node-name:iscsi.session.stateChanged:notice]: iSCSI session state is changed to Connected for the target iSCSI-target (type: dr_auxiliary, address: ip-address).`
	`date-and-time [node-name:iscsi.session.stateChanged:notice]: iSCSI session state is changed to Connected for the target iSCSI-target (type: dr_partner, address: ip-address).`
	`date-and-time [node-name:iscsi.session.stateChanged:notice]: iSCSI session state is changed to Connected for the target iSCSI-target (type: dr_auxiliary, address: ip-address).`
	`date-and-time [node-name:iscsi.session.stateChanged:notice]: iSCSI session state is changed to Connected for the target iSCSI-target (type: dr_partner, address: ip-address).`
	d. Select the **Update flash from backup config** (sync flash) option from the displayed menu.
	If you are prompted to continue with the update, press `y`.

4. Ensure that the environmental variables are set as expected:
   a. Take the node to the LOADER prompt.
   b. Check the environment variable settings with the `printenv` command.
   c. If an environment variable is not set as expected, modify it with the `setenv` *`environment-variable-name changed-value`* command.
   d. Save your changes using the `savenv` command.
5. The next depends on your system configuration:
   - If your system has onboard keymanager, NSE or NVE configured, go to Restore OKM, NSE, and NVE as needed

- If your system does not have onboard keymanager, NSE or NVE configured, complete the steps in this section.

6. From the LOADER prompt, enter the `boot_ontap` command.

*If you see…	Then…*
The login prompt	Go to the next Step.
Waiting for giveback…	a. Log into the partner node. b. Confirm the target node is ready for giveback with the `storage failover show` command.

7. Connect the console cable to the partner node.
8. Give back the node using the `storage failover giveback -fromnode local` command.
9. At the cluster prompt, check the logical interfaces with the `net int -is-home false` command.

   If any interfaces are listed as "false", revert those interfaces back to their home port using the `net int revert` command.

10. Move the console cable to the repaired node and run the `version -v` command to check the ONTAP versions.
11. Restore automatic giveback if you disabled it by using the `storage failover modify -node local -auto-giveback true` command.

Option 2: Boot the recovery image in a two-node MetroCluster configuration

You must boot the ONTAP image from the USB drive and verify the environmental variables.

This procedure applies to systems in a two-node MetroCluster configuration.

Steps

1. From the LOADER prompt, boot the recovery image from the USB flash drive: `boot_recovery`

   The image is downloaded from the USB flash drive.

2. When prompted, either enter the name of the image or accept the default image displayed inside the brackets on your screen.
3. After the image is installed, start the restoration process:
   a. Press `n` when prompted to restore the backup configuration.
   b. Press `y` when prompted to reboot to start using the newly installed software.

      You should be prepared to interrupt the boot process when prompted.

4. As the system boots, press `Ctrl-C` after you see the `Press Ctrl-C for Boot Menu` message., and when the Boot Menu is displayed select option 6.
5. Verify that the environmental variables are set as expected.
   a. Take the node to the LOADER prompt.

b. Check the environment variable settings with the `printenv` command.

c. If an environment variable is not set as expected, modify it with the `setenv environment-variable-name changed-value` command.

d. Save your changes using the `savenv` command.

e. Reboot the node.

Switch back aggregates in a two-node MetroCluster configuration - FAS9000

After you have completed the FRU replacement in a two-node MetroCluster configuration, you can perform the MetroCluster switchback operation. This returns the configuration to its normal operating state, with the sync-source storage virtual machines (SVMs) on the formerly impaired site now active and serving data from the local disk pools.

This task only applies to two-node MetroCluster configurations.

Steps

1. Verify that all nodes are in the `enabled` state: `metrocluster node show`

```
cluster_B::>  metrocluster node show

DR                           Configuration  DR
Group Cluster Node           State          Mirroring Mode
----- ------- -------------- -------------- ---------
--------------------
1     cluster_A
              controller_A_1 configured     enabled   heal roots
completed
      cluster_B
              controller_B_1 configured     enabled   waiting for
switchback recovery
2 entries were displayed.
```

2. Verify that resynchronization is complete on all SVMs: `metrocluster vserver show`

3. Verify that any automatic LIF migrations being performed by the healing operations were completed successfully: `metrocluster check lif show`

4. Perform the switchback by using the `metrocluster switchback` command from any node in the surviving cluster.

5. Verify that the switchback operation has completed: `metrocluster show`

   The switchback operation is still running when a cluster is in the `waiting-for-switchback` state:

```
cluster_B::> metrocluster show
Cluster              Configuration State    Mode
--------------------    -------------------     ---------
 Local: cluster_B configured        switchover
Remote: cluster_A configured        waiting-for-switchback
```

The switchback operation is complete when the clusters are in the `normal` state.:

```
cluster_B::> metrocluster show
Cluster              Configuration State    Mode
--------------------    -------------------     ---------
 Local: cluster_B configured            normal
Remote: cluster_A configured            normal
```

If a switchback is taking a long time to finish, you can check on the status of in-progress baselines by using the `metrocluster config-replication resync-status show` command.

6. Reestablish any SnapMirror or SnapVault configurations.

Restore OKM, NSE, and NVE as needed - FAS9000

Once environment variables are checked, you must complete steps specific to systems that have Onboard Key Manager (OKM), NetApp Storage Encryption (NSE) or NetApp Volume Encryption (NVE) enabled.

Determine which section you should use to restore your OKM, NSE, or NVE configurations:

If NSE or NVE are enabled along with Onboard Key Manager you must restore settings you captured at the beginning of this procedure.

- If NSE or NVE are enabled and Onboard Key Manager is enabled, go to Option 1: Restore NVE or NSE when Onboard Key Manager is enabled.
- If NSE or NVE are enabled for ONATP 9.5, go to Option 2: Restore NSE/NVE on systems running ONTAP 9.5 and earlier.
- If NSE or NVE are enabled for ONTAP 9.6, go to Option 3: Restore NSE/NVE on systems running ONTAP 9.6 and later.

Option 1: Restore NVE or NSE when Onboard Key Manager is enabled

Steps

1. Connect the console cable to the target controller.
2. Use the `boot_ontap` command at the LOADER prompt to boot the controller.
3. Check the console output:

If the console displays…	Then…
The LOADER prompt	Boot the controller to the boot menu: `boot_ontap menu`
Waiting for giveback…	a. Enter `Ctrl-C` at the prompt b. At the message: Do you wish to halt this controller rather than wait [y/n]? , enter: `y` c. At the LOADER prompt, enter the `boot_ontap menu` command.

4. At the Boot Menu, enter the hidden command, `recover_onboard_keymanager` and reply `y` at the prompt.
5. Enter the passphrase for the onboard key manager you obtained from the customer at the beginning of this procedure.
6. When prompted to enter the backup data, paste the backup data you captured at the beginning of this procedure, when asked. Paste the output of `security key-manager backup show` OR `security key-manager onboard show-backup` command.

   The data is output from either `security key-manager backup show` or `security key-manager onboard show-backup` command.

   Example of backup data:


```
-------------------------BEGIN BACKUP-------------------------
TmV0QXBwIEtleSBCbG9iAAEAAAAEAAAAcAEAAAAAAADuD+byAAAAACEAAAAAAAAA
QAAAAAAAAABvOlH0AAAAAMh7qDLRyH1DBz12piVdy9ATSFMT0C0TlYFss4PDjTaV
dzRYkLd1PhQLxAWJwOIyqSr8qY1SEBgm1IWgE5DLRqkiAAAAAAAAACgAAAAAAAAA
3WTh7gAAAAAAAAAAAAAAAAIAAAAAAAgAZJEIWvdeHr5RCAvHGclo+wAAAAAAAAAA
IgAAAAAAAAAoAAAAAAAAAEOTcR0AAAAAAAAAAAAAAAACAAAAAAAJAGr3tJA/
LRzUQRHwv+1aWvAAAAAAAAAAACQAAAAAAAAgAAAAAAAAACdhTcvAAAAAJ1PXeBf
ml4NBsSyV1B4jc4A7cvWEFY6lLG6hc6tbKLAHZuvfQ4rIbYAAAAAAAAAAAAAAAAA
AAAAAAAAAAAAAAAAAAAAAAAAAAAAAAAAAAAAAAAAAAAAAAAAAAAAAAAAAAAAAAAA
AAAAAAAAAAAAAAAAAAAAAAAAAAAAAAAAAAAAAAAAAAAAAAAAAAAAAAAAAAAAAAAA . . . .
H4nPQM0nrDRYRa9SCv8AAAAAAAAAAAAAAAAAAAAAAAAAAAAAAAAAAAAAAAAAAAAA
AAAAAAAAAAAAAAAAAAAAAAAAAAAAAAAAAAAAAAAAAAAAAAAAAAAAAAAAAAAAAAAA
AAAAAAAA

-------------------------END BACKUP-------------------------
```


7. At the Boot Menu select the option for Normal Boot.

   The system boots to `Waiting for giveback…` prompt.

8. Move the console cable to the partner controller and login as admin.
9. Confirm the target controller is ready for giveback with the `storage failover show` command.
10. Give back only the CFO aggregates with the storage failover giveback `-fromnode local -only-cfo -aggregates true` command.

- If the command fails because of a failed disk, physically disengage the failed disk, but leave the disk in the slot until a replacement is received.
- If the command fails because of an open CIFS session, check with the customer on how to close out CIFS sessions.

  > Terminating CIFS can cause loss of data.

- If the command fails because the partner is "not ready", wait 5 minutes for the NVMEMs to synchronize.
- If the command fails because of an NDMP, SnapMirror, or SnapVault process, disable the process. See the appropriate Documentation Center for more information.

11. Once the giveback completes, check the failover and giveback status with the `storage failover show` and `storage failover show-giveback` commands.

    Only the CFO aggregates (root aggregate and CFO style data aggregates) will be shown.

12. Move the console cable to the target controller.
13. If you are running ONTAP 9.5 and earlier, run the key-manager setup wizard:
    a. Start the wizard using the `security key-manager setup -nodenodename` command, and then enter the passphrase for onboard key management when prompted.
    b. Enter the `key-manager key show -detail` command to see a detailed view of all keys stored in the onboard key manager and verify that the `Restored` column = `yes` for all authentication keys.

       > If the `Restored` column = anything other than `yes`, contact Customer Support.

    c. Wait 10 minutes for the key to synchronize across the cluster.
14. If you are running ONTAP 9.6 or later:
    a. Run the `security key-manager onboard sync` command and then enter the passphrase when prompted.
    b. Enter the `security key-manager key query` command to see a detailed view of all keys stored in the onboard key manager and verify that the `Restored` column = `yes/true` for all authentication keys.

       > If the `Restored` column = anything other than `yes/true`, contact Customer Support.

    c. Wait 10 minutes for the key to synchronize across the cluster.
15. Move the console cable to the partner controller.
16. Give back the target controller using the `storage failover giveback -fromnode local` command.
17. Check the giveback status, 3 minutes after it reports complete, using the `storage failover show` command.

    If giveback is not complete after 20 minutes, contact Customer Support.

18. At the clustershell prompt, enter the `net int show -is-home false` command to list the logical interfaces that are not on their home controller and port.

If any interfaces are listed as `false`, revert those interfaces back to their home port using the `net int revert -vserver Cluster -lif` *`nodename`* command.

19. Move the console cable to the target controller and run the `version -v` command to check the ONTAP versions.
20. Restore automatic giveback if you disabled it by using the `storage failover modify -node local -auto-giveback true` command.

Option 2: Restore NSE/NVE on systems running ONTAP 9.5 and earlier

Steps

1. Connect the console cable to the target controller.
2. Use the `boot_ontap` command at the LOADER prompt to boot the controller.
3. Check the console output:

If the console displays…	Then…
The login prompt	Go to Step 7.
Waiting for giveback…	a. Log into the partner controller. b. Confirm the target controller is ready for giveback with the `storage failover show` command.

4. Move the console cable to the partner controller and give back the target controller storage using the `storage failover giveback -fromnode local -only-cfo-aggregates true local` command.
   - If the command fails because of a failed disk, physically disengage the failed disk, but leave the disk in the slot until a replacement is received.
   - If the command fails because of an open CIFS sessions, check with customer how to close out CIFS sessions.

     Terminating CIFS can cause loss of data.

   - If the command fails because the partner "not ready", wait 5 minutes for the NVMEMs to synchronize.
   - If the command fails because of an NDMP, SnapMirror, or SnapVault process, disable the process. See the appropriate Documentation Center for more information.
5. Wait 3 minutes and check the failover status with the `storage failover show` command.
6. At the clustershell prompt, enter the `net int show -is-home false` command to list the logical interfaces that are not on their home controller and port.

   If any interfaces are listed as `false`, revert those interfaces back to their home port using the `net int revert -vserver Cluster -lif` *`nodename`* command.

7. Move the console cable to the target controller and run the version `-v command` to check the ONTAP versions.

8. Restore automatic giveback if you disabled it by using the `storage failover modify -node local -auto-giveback true` command.
9. Use the `storage encryption disk show` at the clustershell prompt, to review the output.

   This command does not work if NVE (NetApp Volume Encryption) is configured

10. Use the security key-manager query to display the key IDs of the authentication keys that are stored on the key management servers.
    - If the `Restored` column = `yes` and all key managers report in an available state, go to *Complete the replacement process*.
    - If the `Restored` column = anything other than `yes`, and/or one or more key managers is not available, use the `security key-manager restore -address` command to retrieve and restore all authentication keys (AKs) and key IDs associated with all nodes from all available key management servers.

      Check the output of the security key-manager query again to ensure that the `Restored` column = `yes` and all key managers report in an available state

11. If the Onboard Key Management is enabled:
    a. Use the `security key-manager key show -detail` to see a detailed view of all keys stored in the onboard key manager.
    b. Use the `security key-manager key show -detail` command and verify that the `Restored` column = `yes` for all authentication keys.

       If the `Restored` column = anything other than `yes`, use the `security key-manager setup -node` *`Repaired`*`(Target)`*`node`* command to restore the Onboard Key Management settings. Rerun the `security key-manager key show -detail` command to verify `Restored` column = `yes` for all authentication keys.

12. Connect the console cable to the partner controller.
13. Give back the controller using the `storage failover giveback -fromnode local` command.
14. Restore automatic giveback if you disabled it by using the `storage failover modify -node local -auto-giveback true` command.

Option 3: Restore NSE/NVE on systems running ONTAP 9.6 and later

Steps

1. Connect the console cable to the target controller.
2. Use the `boot_ontap` command at the LOADER prompt to boot the controller.
3. Check the console output:

If the console displays…	Then…
The login prompt	Go to Step 7.

If the console displays…	Then…
Waiting for giveback…	a. Log into the partner controller. b. Confirm the target controller is ready for giveback with the `storage failover show` command.

4. Move the console cable to the partner controller and give back the target controller storage using the `storage failover giveback -fromnode local -only-cfo-aggregates true local` command.
   - If the command fails because of a failed disk, physically disengage the failed disk, but leave the disk in the slot until a replacement is received.
   - If the command fails because of an open CIFS session, check with the customer on how to close out CIFS sessions.

     Terminating CIFS can cause loss of data.

   - If the command fails because the partner is "not ready", wait 5 minutes for the NVMEMs to synchronize.
   - If the command fails because of an NDMP, SnapMirror, or SnapVault process, disable the process. See the appropriate Documentation Center for more information.
5. Wait 3 minutes and check the failover status with the `storage failover show` command.
6. At the clustershell prompt, enter the `net int show -is-home false` command to list the logical interfaces that are not on their home controller and port.

   If any interfaces are listed as `false`, revert those interfaces back to their home port using the `net int revert -vserver Cluster -lif` *`nodename`* command.

7. Move the console cable to the target controller and run the `version -v` command to check the ONTAP versions.
8. Restore automatic giveback if you disabled it by using the `storage failover modify -node local -auto-giveback true` command.
9. Use the `storage encryption disk show` at the clustershell prompt, to review the output.
10. Use the `security key-manager key query` command to display the key IDs of the authentication keys that are stored on the key management servers.
    - If the `Restored` column = `yes/true`, you are done and can proceed to complete the replacement process.
    - If the `Key Manager type` = `external` and the `Restored` column = anything other than `yes/true`, use the `security key-manager external restore` command to restore the key IDs of the authentication keys.

      If the command fails, contact Customer Support.

    - If the `Key Manager type` = `onboard` and the `Restored` column = anything other than `yes/true`, use the `security key-manager onboard sync` command to re-sync the Key Manager type.

Use the security key-manager key query to verify that the `Restored` column = `yes/true` for all authentication keys.

11. Connect the console cable to the partner controller.
12. Give back the controller using the `storage failover giveback -fromnode local` command.
13. Restore automatic giveback if you disabled it by using the `storage failover modify -node local -auto-giveback true` command.
14. Restore Autosupport if it was disabled by using the `system node autosupport invoke -node * -type all -message MAINT=END`

Return the failed part to NetApp - FAS9000

Return the failed part to NetApp, as described in the RMA instructions shipped with the kit. See the Part Return & Replacements page for further information.

Copyright information

Copyright © 2024 NetApp, Inc. All Rights Reserved. Printed in the U.S. No part of this document covered by copyright may be reproduced in any form or by any means—graphic, electronic, or mechanical, including photocopying, recording, taping, or storage in an electronic retrieval system—without prior written permission of the copyright owner.

Software derived from copyrighted NetApp material is subject to the following license and disclaimer:

THIS SOFTWARE IS PROVIDED BY NETAPP “AS IS” AND WITHOUT ANY EXPRESS OR IMPLIED WARRANTIES, INCLUDING, BUT NOT LIMITED TO, THE IMPLIED WARRANTIES OF MERCHANTABILITY AND FITNESS FOR A PARTICULAR PURPOSE, WHICH ARE HEREBY DISCLAIMED. IN NO EVENT SHALL NETAPP BE LIABLE FOR ANY DIRECT, INDIRECT, INCIDENTAL, SPECIAL, EXEMPLARY, OR CONSEQUENTIAL DAMAGES (INCLUDING, BUT NOT LIMITED TO, PROCUREMENT OF SUBSTITUTE GOODS OR SERVICES; LOSS OF USE, DATA, OR PROFITS; OR BUSINESS INTERRUPTION) HOWEVER CAUSED AND ON ANY THEORY OF LIABILITY, WHETHER IN CONTRACT, STRICT LIABILITY, OR TORT (INCLUDING NEGLIGENCE OR OTHERWISE) ARISING IN ANY WAY OUT OF THE USE OF THIS SOFTWARE, EVEN IF ADVISED OF THE POSSIBILITY OF SUCH DAMAGE.

NetApp reserves the right to change any products described herein at any time, and without notice. NetApp assumes no responsibility or liability arising from the use of products described herein, except as expressly agreed to in writing by NetApp. The use or purchase of this product does not convey a license under any patent rights, trademark rights, or any other intellectual property rights of NetApp.

The product described in this manual may be protected by one or more U.S. patents, foreign patents, or pending applications.

LIMITED RIGHTS LEGEND: Use, duplication, or disclosure by the government is subject to restrictions as set forth in subparagraph (b)(3) of the Rights in Technical Data -Noncommercial Items at DFARS 252.227-7013 (FEB 2014) and FAR 52.227-19 (DEC 2007).

Data contained herein pertains to a commercial product and/or commercial service (as defined in FAR 2.101) and is proprietary to NetApp, Inc. All NetApp technical data and computer software provided under this Agreement is commercial in nature and developed solely at private expense. The U.S. Government has a non-exclusive, non-transferrable, nonsublicensable, worldwide, limited irrevocable license to use the Data only in connection with and in support of the U.S. Government contract under which the Data was delivered. Except as provided herein, the Data may not be used, disclosed, reproduced, modified, performed, or displayed without the prior written approval of NetApp, Inc. United States Government license rights for the Department of Defense are limited to those rights identified in DFARS clause 252.227-7015(b) (FEB 2014).

Trademark information

NETAPP, the NETAPP logo, and the marks listed at http://www.netapp.com/TM are trademarks of NetApp, Inc. Other company and product names may be trademarks of their respective owners.