Controller module

Install and maintain

NetApp
March 22, 2024

This PDF was generated from https://docs.netapp.com/us-en/ontap-systems/fas9500/controller_replace_overview.html on March 22, 2024. Always check docs.netapp.com for the latest.

Table of Contents

Controller module . . . 1
Replace the controller module - FAS9500 . . . 1
Shut down the impaired node - FAS9500 . . . 1
Replace the controller module hardware - FAS9500 . . . 2
Restore and verify the system configuration - FAS9500 . . . 8
Recable the system - FAS9500 . . . 9
Complete system restoration - FAS9500 . . . 12

Controller module

Replace the controller module - FAS9500

To replace the impaired controller module, you must shut down the impaired controller, move the internal components to the replacement controller module, install the replacement controller module, and reboot the replacement controller.

Before you begin

You must review the prerequisites for the replacement procedure and select the correct one for your version of the ONTAP operating system.

- All drive shelves must be working properly.
- If your system is a FlexArray system or has a V_StorageAttach license, you must refer to the additional required steps before performing this procedure.
- If your system is in an HA pair, the healthy node must be able to take over the node that is being replaced (referred to in this procedure as the “impaired node”).
- If your system is in a MetroCluster configuration, you must review the section Choosing the correct recovery procedure to determine whether you should use this procedure.

  If this is the procedure you should use, note that the controller replacement procedure for a node in a four or eight node MetroCluster configuration is the same as that in an HA pair. No MetroCluster-specific steps are required because the failure is restricted to an HA pair and storage failover commands can be used to provide nondisruptive operation during the replacement.

- You must replace the failed component with a replacement FRU component you received from your provider.
- You must be replacing a controller module with a controller module of the same model type. You cannot upgrade your system by just replacing the controller module.
- You cannot change any drives or drive shelves as part of this procedure.
- In this procedure, the boot device is moved from the impaired node to the replacement node so that the replacement node will boot up in the same version of ONTAP as the old controller module.
- It is important that you apply the commands in these steps on the correct systems:
  - The impaired node is the node that is being replaced.
  - The replacement node is the new node that is replacing the impaired node.
  - The healthy node is the surviving node.
- You must always capture the node’s console output to a text file.

  This provides you a record of the procedure so that you can troubleshoot any issues that you might encounter during the replacement process.

Shut down the impaired node - FAS9500

To shut down the impaired controller, you must determine the status of the controller and, if necessary, take over the controller so that the healthy controller continues to serve data

from the impaired controller storage.

About this task

- If you are using NetApp Storage Encryption, you must have reset the MSID using the instructions in the Returning SEDs to unprotected mode.
- If you have a SAN system, you must have checked event messages (`cluster kernel-service show`) for impaired controller SCSI blade. The `cluster kernel-service show` command displays the node name, quorum status of that node, availability status of that node, and operational status of that node.

  Each SCSI-blade process should be in quorum with the other nodes in the cluster. Any issues must be resolved before you proceed with the replacement.

- If you have a cluster with more than two nodes, it must be in quorum. If the cluster is not in quorum or a healthy controller shows false for eligibility and health, you must correct the issue before shutting down the impaired controller; see Synchronize a node with the cluster.

Steps

1. If AutoSupport is enabled, suppress automatic case creation by invoking an AutoSupport message: `system node autosupport invoke -node * -type all -message MAINT=number_of_hours_downh`

   The following AutoSupport message suppresses automatic case creation for two hours: `cluster1:> system node autosupport invoke -node * -type all -message MAINT=2h`

2. Disable automatic giveback from the console of the healthy controller: `storage failover modify –node local -auto-giveback false`

   When you see *Do you want to disable auto-giveback?*, enter `y`.

3. Take the impaired controller to the LOADER prompt:

If the impaired controller is displaying…	Then…
The LOADER prompt	Go to the next step.
Waiting for giveback…	Press Ctrl-C, and then respond `y` when prompted.
System prompt or password prompt	Take over or halt the impaired controller from the healthy controller: `storage failover takeover -ofnode` *`impaired_node_name`* When the impaired controller shows Waiting for giveback…, press Ctrl-C, and then respond `y`.

Replace the controller module hardware - FAS9500

To replace the controller module hardware, you must remove the impaired node, move FRU components to the replacement controller module, install the replacement controller

module in the chassis, and then boot the system to Maintenance mode.

The following animation shows the whole process of moving components from the impaired to the replacement controller.

Animation - Replace controller module, complete process

Step 1: Remove the controller module

To access components inside the controller, you must first remove the controller module from the system and then remove the cover on the controller module.

1. If you are not already grounded, properly ground yourself.
2. Unplug the cables from the impaired controller module, and keep track of where the cables were connected.
3. Slide the terra cotta button on the cam handle downward until it unlocks.

   Animation - Remove controller module

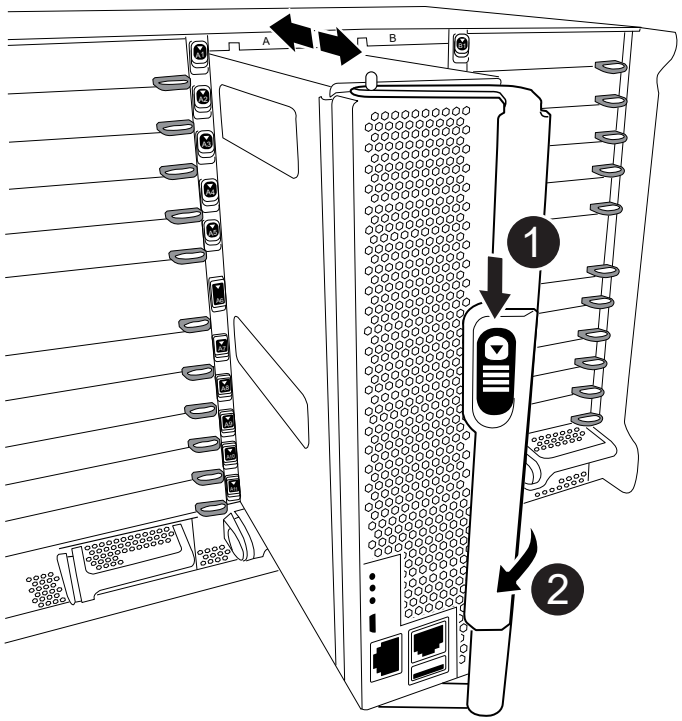

1	Cam handle release button
2	Cam handle

4. Rotate the cam handle so that it completely disengages the controller module from the chassis, and then slide the controller module out of the chassis.

   Make sure that you support the bottom of the controller module as you slide it out of the chassis.

5. Place the controller module lid-side up on a stable, flat surface, press the blue button on the cover, slide

the cover to the back of the controller module, and then swing the cover up and lift it off of the controller module.

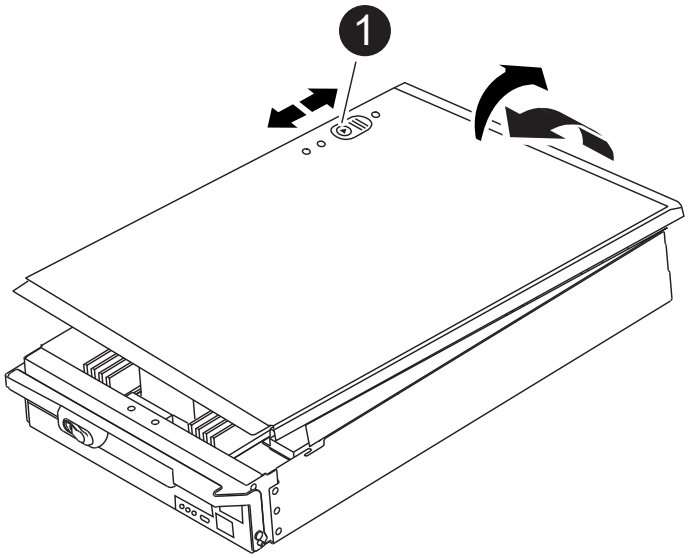

1	Controller module cover locking button

Step 2: Move the boot media

You must locate the boot media and follow the directions to remove it from the old controller and insert it in the new controller.

1. Locate the boot media using the following illustration or the FRU map on the controller module:

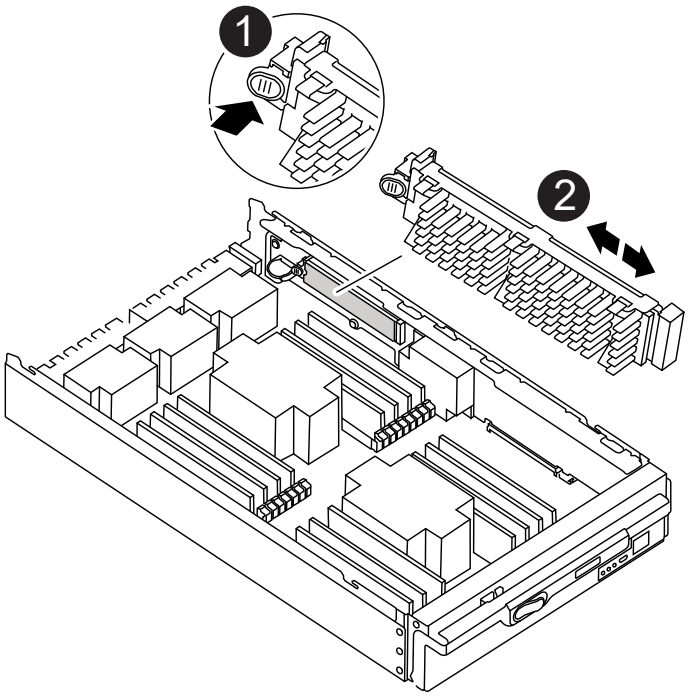

1	Press release tab

❷	Boot media

2. Press the blue button on the boot media housing to release the boot media from its housing, and then gently pull it straight out of the boot media socket.

> Do not twist or pull the boot media straight up, because this could damage the socket or the boot media.

3. Move the boot media to the new controller module, align the edges of the boot media with the socket housing, and then gently push it into the socket.
4. Check the boot media to make sure that it is seated squarely and completely in the socket.

   If necessary, remove the boot media and reseat it into the socket.

5. Push the boot media down to engage the locking button on the boot media housing.

Step 3: Move the system DIMMs

To move the DIMMs, locate and move them from the old controller into the replacement controller and follow the specific sequence of steps.

> The VER2 controller has fewer DIMM sockets. There is no reduction in the number of DIMMs supported or change in the DIMM socket numbering. When moving the DIMMs to the new controller module, install the DIMMs into the same socket number/location as the impaired controller module. See the FRU map diagram on the VER2 controller module for DIMM socket locations.

1. If you are not already grounded, properly ground yourself.
2. Locate the DIMMs on your controller module.
3. Note the orientation of the DIMM in the socket so that you can insert the DIMM in the replacement controller module in the proper orientation.
4. Eject the DIMM from its slot by slowly pushing apart the two DIMM ejector tabs on either side of the DIMM, and then slide the DIMM out of the slot.

> Carefully hold the DIMM by the edges to avoid pressure on the components on the DIMM circuit board.

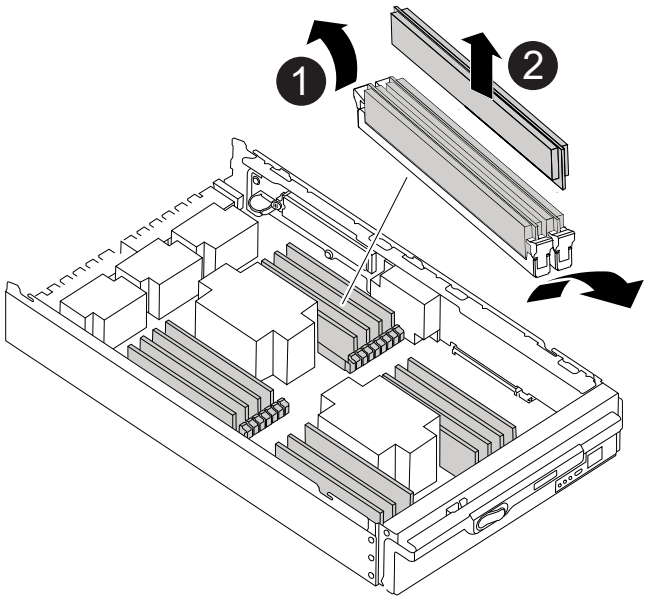

1	DIMM ejector tabs
2	DIMM

5. Locate the slot where you are installing the DIMM.
6. Make sure that the DIMM ejector tabs on the connector are in the open position, and then insert the DIMM squarely into the slot.

   The DIMM fits tightly in the slot, but should go in easily. If not, realign the DIMM with the slot and reinsert it.

   > Visually inspect the DIMM to verify that it is evenly aligned and fully inserted into the slot.

7. Insert the DIMM squarely into the slot.

   The DIMM fits tightly in the slot, but should go in easily. If not, realign the DIMM with the slot and reinsert it.

   > Visually inspect the DIMM to verify that it is evenly aligned and fully inserted into the slot.

8. Push carefully, but firmly, on the top edge of the DIMM until the ejector tabs snap into place over the notches at the ends of the DIMM.
9. Repeat these steps for the remaining DIMMs.

Step 4: Install the controller

After you install the components into the replacement controller module, you must install the replacement controller module into the system chassis and boot the operating system.

For HA pairs with two controller modules in the same chassis, the sequence in which you install the controller module is especially important because it attempts to reboot as soon as you completely seat it in the chassis.

> The system might update system firmware when it boots. Do not abort this process. The procedure requires you to interrupt the boot process, which you can typically do at any time after prompted to do so. However, if the system updates the system firmware when it boots, you must wait until after the update is complete before interrupting the boot process.

1. If you are not already grounded, properly ground yourself.
2. If you have not already done so, replace the cover on the controller module.
3. Align the end of the controller module with the opening in the chassis, and then gently push the controller module halfway into the system.

   Animation - Install controller module

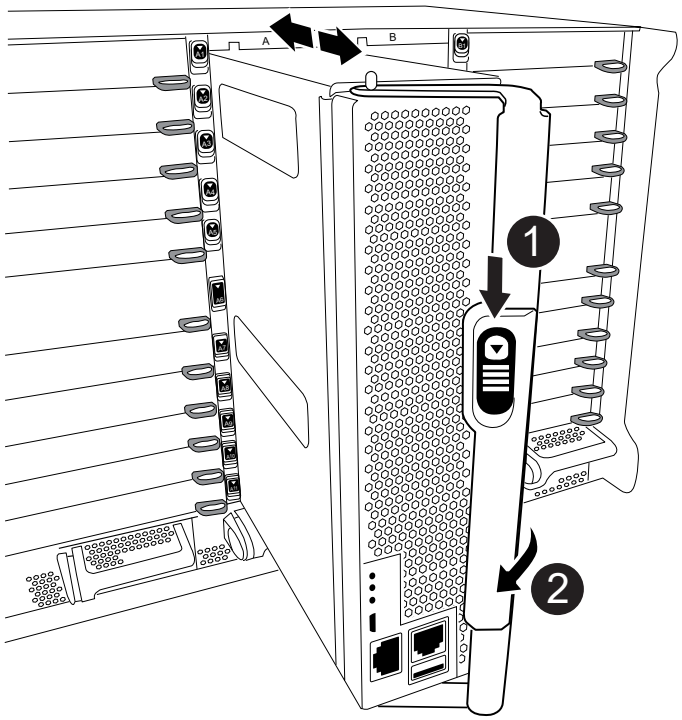

1	Cam handle release button
2	Cam handle

> Do not completely insert the controller module in the chassis until instructed to do so.

4. Cable the management and console ports only, so that you can access the system to perform the tasks in the following sections.

   > You will connect the rest of the cables to the controller module later in this procedure.

5. Complete the reinstallation of the controller module:
   a. If you have not already done so, reinstall the cable management device.
   b. Firmly push the controller module into the chassis until it meets the midplane and is fully seated.

> Do not use excessive force when sliding the controller module into the chassis to avoid damaging the connectors.

The controller module begins to boot as soon as it is fully seated in the chassis. Be prepared to interrupt the boot process.

c. Rotate the controller module cam handle to the locked position.

d. Interrupt the boot process by pressing `Ctrl-C` when you see Press Ctrl-C for Boot Menu.

e. Select the option to boot to LOADER.

Restore and verify the system configuration - FAS9500

After completing the hardware replacement, you verify the low-level system configuration of the replacement controller and reconfigure system settings as necessary..

Step 1: Set and verify the system time after replacing the controller module

You should check the time and date on the replacement controller module against the healthy controller module in an HA pair, or against a reliable time server in a stand-alone configuration. If the time and date do not match, you must reset them on the replacement controller module to prevent possible outages on clients due to time differences.

About this task

It is important that you apply the commands in the steps on the correct systems:

- The *replacement* node is the new node that replaced the impaired node as part of this procedure.
- The *healthy* node is the HA partner of the *replacement* node.

Steps

1. If the *replacement* node is not at the LOADER prompt, halt the system to the LOADER prompt.
2. On the *healthy* node, check the system time: `cluster date show`

   The date and time are based on the configured timezone.

3. At the LOADER prompt, check the date and time on the *replacement* node: `show date`

   The date and time are given in GMT.

4. If necessary, set the date in GMT on the replacement node: `set date` *`mm/dd/yyyy`*
5. If necessary, set the time in GMT on the replacement node: `set time` *`hh:mm:ss`*
6. At the LOADER prompt, confirm the date and time on the *replacement* node: `show date`

   The date and time are given in GMT.

Step 2: Verify and set the HA state of the controller module

You must verify the `HA` state of the controller module and, if necessary, update the state to match your system configuration.

1. In Maintenance mode from the replacement controller module, verify that all components display the same `HA` state: `ha-config show`

If your system is in…	The HA state for all components should be…
An HA pair	ha
A MetroCluster FC configuration with four or more nodes	mcc
A MetroCluster IP configuration	mccip

2. If the displayed system state of the controller module does not match your system configuration, set the `HA` state for the controller module: `ha-config modify controller` *`ha-state`*
3. If the displayed system state of the chassis does not match your system configuration, set the `HA` state for the chassis: `ha-config modify chassis` *`ha-state`*

Recable the system - FAS9500

Continue the replacement procedure by recabling the storage and network conigurations.

Step 1: Recable the system

You must recable the controller module's storage and network connections.

Steps

1. Recable the system.
2. Verify that the cabling is correct by using Active IQ Config Advisor.
   a. Download and install Config Advisor.
   b. Enter the information for the target system, and then click Collect Data.
   c. Click the Cabling tab, and then examine the output. Make sure that all disk shelves are displayed and all disks appear in the output, correcting any cabling issues you find.
   d. Check other cabling by clicking the appropriate tab, and then examining the output from Config Advisor.

> The system ID and disk assignment information reside in the NVRAM module, which is in a module separate from the controller module and not impacted by the controller module replacement.

Step 2: Reassign disks

If the storage system is in an HA pair, the system ID of the new controller module is automatically assigned to the disks when the giveback occurs at the end of the procedure. You must confirm the system ID change when you boot the *replacement* node and then verify that the change was implemented.

This procedure applies only to systems running ONTAP in an HA pair.

1. If the *replacement* node is in Maintenance mode (showing the `*>` prompt), exit Maintenance mode and go

to the LOADER prompt: `halt`

2. From the LOADER prompt on the *replacement* node, boot the node, entering `y` if you are prompted to override the system ID due to a system ID mismatch.`boot_ontap`
3. Wait until the `Waiting for giveback…` message is displayed on the *replacement* node console and then, from the healthy node, verify that the new partner system ID has been automatically assigned: storage failover show

   In the command output, you should see a message that the system ID has changed on the impaired node, showing the correct old and new IDs. In the following example, node2 has undergone replacement and has a new system ID of 151759706.

```
node1> storage failover show
                                    Takeover
Node              Partner           Possible     State Description
------------      ------------      --------
-------------------------------------
node1             node2             false        System ID changed on
partner (Old:
                                                 151759755, New:
151759706), In takeover
node2             node1             -            Waiting for giveback
(HA mailboxes)
```

4. From the healthy node, verify that any coredumps are saved:
   a. Change to the advanced privilege level: `set -privilege advanced`

      You can respond `Y` when prompted to continue into advanced mode. The advanced mode prompt appears (*>).

   b. Save any coredumps: `system node run -node` *`local-node-name`* `partner savecore`
   c. Wait for the savecore command to complete before issuing the giveback.

      You can enter the following command to monitor the progress of the savecore command: `system node run -node` *`local-node-name`* `partner savecore -s`

   d. Return to the admin privilege level: `set -privilege admin`
5. If your storage system has Storage or Volume Encryption configured, you must restore Storage or Volume Encryption functionality by using one of the following procedures, depending on whether you are using onboard or external key management:
   - Restore onboard key management encryption keys
   - Restore external key management encryption keys
6. Give back the node:
   a. From the healthy node, give back the replaced node's storage: `storage failover giveback -ofnode` *`replacement_node_name`*

      The *replacement* node takes back its storage and completes booting.

If you are prompted to override the system ID due to a system ID mismatch, you should enter `y`.

> If the giveback is vetoed, you can consider overriding the vetoes.

For more information, see the Manual giveback commands topic to override the veto.

b. After the giveback has been completed, confirm that the HA pair is healthy and that takeover is possible: storage failover show

   The output from the `storage failover show` command should not include the System ID changed on partner message.

7. Verify that the disks were assigned correctly: `storage disk show -ownership`

   The disks belonging to the *replacement* node should show the new system ID. In the following example, the disks owned by node1 now show the new system ID, 1873775277:

```
node1> storage disk show -ownership

Disk  Aggregate Home  Owner  DR Home  Home ID    Owner ID  DR Home ID
Reserver  Pool
----- ------    ----- ------ -------- -------    -------    -------
---------  ---
1.0.0  aggr0_1  node1 node1  -        1873775277 1873775277  -
1873775277 Pool0
1.0.1  aggr0_1  node1 node1           1873775277 1873775277  -
1873775277 Pool0
.
.
.
```

8. If the system is in a MetroCluster configuration, monitor the status of the node: `metrocluster node show`

   The MetroCluster configuration takes a few minutes after the replacement to return to a normal state, at which time each node will show a configured state, with DR Mirroring enabled and a mode of normal. The `metrocluster node show -fields node-systemid` command output displays the old system ID until the MetroCluster configuration returns to a normal state.

9. If the node is in a MetroCluster configuration, depending on the MetroCluster state, verify that the DR home ID field shows the original owner of the disk if the original owner is a node on the disaster site.

   This is required if both of the following are true:

   - The MetroCluster configuration is in a switchover state.
   - The *replacement* node is the current owner of the disks on the disaster site.

     For more information, see Disk ownership changes during HA takeover and MetroCluster switchover in a four-node MetroCluster configuration topic.

10. If your system is in a MetroCluster configuration, verify that each node is configured: `metrocluster node show - fields configuration-state`

```
node1_siteA::> metrocluster node show -fields configuration-state

dr-group-id            cluster node           configuration-state
-----------            ---------------------- --------------
-------------------
1 node1_siteA          node1mcc-001           configured
1 node1_siteA          node1mcc-002           configured
1 node1_siteB          node1mcc-003           configured
1 node1_siteB          node1mcc-004           configured

4 entries were displayed.
```

11. Verify that the expected volumes are present for each node: `vol show -node node-name`
12. If you disabled automatic takeover on reboot, enable it from the healthy node: `storage failover modify -node replacement-node-name -onreboot true`

Complete system restoration - FAS9500

To complete the replacement procedure and restore your system to full operation, you must recable the storage, restore the NetApp Storage Encryption configuration (if necessary), and install licenses for the new controller. You must complete a series of tasks before restoring your system to full operation.

Step 1: Install licenses for the replacement node in ONTAP

You must install new licenses for the *replacement* node if the impaired node was using ONTAP features that require a standard (node-locked) license. For features with standard licenses, each node in the cluster should have its own key for the feature.

About this task

Until you install license keys, features requiring standard licenses continue to be available to the *replacement* node. However, if the impaired node was the only node in the cluster with a license for the feature, no configuration changes to the feature are allowed.

Also, using unlicensed features on the node might put you out of compliance with your license agreement, so you should install the replacement license key or keys on the *replacement* node as soon as possible.

The licenses keys must be in the 28-character format.

You have a 90-day grace period in which to install the license keys. After the grace period, all old licenses are invalidated. After a valid license key is installed, you have 24 hours to install all of the keys before the grace period ends.

If the node is in a MetroCluster configuration and all nodes at a site have been replaced, license keys must be installed on the *replacement* node or nodes prior to switchback.

Steps

1. If you need new license keys, obtain replacement license keys on the NetApp Support site in the My Support section under Software licenses.

   > The new license keys that you require are automatically generated and sent to the email address on file. If you fail to receive the email with the license keys within 30 days, you should contact technical support.

2. Install each license key: `system license add -license-code license-key, license-key...`
3. Remove the old licenses, if desired:
   a. Check for unused licenses: `license clean-up -unused -simulate`
   b. If the list looks correct, remove the unused licenses: `license clean-up -unused`

Step 2: Verify LIFs and registering the serial number

Before returning the *replacement* node to service, you should verify that the LIFs are on their home ports, and register the serial number of the *replacement* node if AutoSupport is enabled, and reset automatic giveback.

Steps

1. Verify that the logical interfaces are reporting to their home server and ports: `network interface show -is-home false`

   If any LIFs are listed as false, revert them to their home ports: `network interface revert -vserver * -lif *`

2. Register the system serial number with NetApp Support.
   - If AutoSupport is enabled, send an AutoSupport message to register the serial number.
   - If AutoSupport is not enabled, call NetApp Support to register the serial number.
3. If an AutoSupport maintenance window was triggered, end it by using the `system node autosupport invoke -node * -type all -message MAINT=END` command.
4. If automatic giveback was disabled, reenable it: `storage failover modify -node local -auto -giveback true`

Step 3: Return the failed part to NetApp

Return the failed part to NetApp, as described in the RMA instructions shipped with the kit. See the Part Return & Replacements page for further information.

Copyright information

Copyright © 2024 NetApp, Inc. All Rights Reserved. Printed in the U.S. No part of this document covered by copyright may be reproduced in any form or by any means—graphic, electronic, or mechanical, including photocopying, recording, taping, or storage in an electronic retrieval system—without prior written permission of the copyright owner.

Software derived from copyrighted NetApp material is subject to the following license and disclaimer:

THIS SOFTWARE IS PROVIDED BY NETAPP “AS IS” AND WITHOUT ANY EXPRESS OR IMPLIED WARRANTIES, INCLUDING, BUT NOT LIMITED TO, THE IMPLIED WARRANTIES OF MERCHANTABILITY AND FITNESS FOR A PARTICULAR PURPOSE, WHICH ARE HEREBY DISCLAIMED. IN NO EVENT SHALL NETAPP BE LIABLE FOR ANY DIRECT, INDIRECT, INCIDENTAL, SPECIAL, EXEMPLARY, OR CONSEQUENTIAL DAMAGES (INCLUDING, BUT NOT LIMITED TO, PROCUREMENT OF SUBSTITUTE GOODS OR SERVICES; LOSS OF USE, DATA, OR PROFITS; OR BUSINESS INTERRUPTION) HOWEVER CAUSED AND ON ANY THEORY OF LIABILITY, WHETHER IN CONTRACT, STRICT LIABILITY, OR TORT (INCLUDING NEGLIGENCE OR OTHERWISE) ARISING IN ANY WAY OUT OF THE USE OF THIS SOFTWARE, EVEN IF ADVISED OF THE POSSIBILITY OF SUCH DAMAGE.

NetApp reserves the right to change any products described herein at any time, and without notice. NetApp assumes no responsibility or liability arising from the use of products described herein, except as expressly agreed to in writing by NetApp. The use or purchase of this product does not convey a license under any patent rights, trademark rights, or any other intellectual property rights of NetApp.

The product described in this manual may be protected by one or more U.S. patents, foreign patents, or pending applications.

LIMITED RIGHTS LEGEND: Use, duplication, or disclosure by the government is subject to restrictions as set forth in subparagraph (b)(3) of the Rights in Technical Data -Noncommercial Items at DFARS 252.227-7013 (FEB 2014) and FAR 52.227-19 (DEC 2007).

Data contained herein pertains to a commercial product and/or commercial service (as defined in FAR 2.101) and is proprietary to NetApp, Inc. All NetApp technical data and computer software provided under this Agreement is commercial in nature and developed solely at private expense. The U.S. Government has a non-exclusive, non-transferrable, nonsublicensable, worldwide, limited irrevocable license to use the Data only in connection with and in support of the U.S. Government contract under which the Data was delivered. Except as provided herein, the Data may not be used, disclosed, reproduced, modified, performed, or displayed without the prior written approval of NetApp, Inc. United States Government license rights for the Department of Defense are limited to those rights identified in DFARS clause 252.227-7015(b) (FEB 2014).

Trademark information

NETAPP, the NETAPP logo, and the marks listed at http://www.netapp.com/TM are trademarks of NetApp, Inc. Other company and product names may be trademarks of their respective owners.