I/O module

Install and maintain

NetApp
March 22, 2024

This PDF was generated from https://docs.netapp.com/us-en/ontap-systems/fas9500/pci_cards_and_risers_replace.html on March 22, 2024. Always check docs.netapp.com for the latest.

Table of Contents

I/O module 1
Replace an I/O module - FAS9500 1
Add an I/O module - FAS9500 3

I/O module

Replace an I/O module - FAS9500

To replace an I/O module, you must perform a specific sequence of tasks.

- You can use this procedure with all versions of ONTAP supported by your system.
- All other components in the system must be functioning properly; if not, you must contact technical support.

Step 1: Shut down the impaired node

To shut down the impaired controller, you must determine the status of the controller and, if necessary, take over the controller so that the healthy controller continues to serve data from the impaired controller storage.

About this task

If you have a cluster with more than two nodes, it must be in quorum. If the cluster is not in quorum or a healthy controller shows false for eligibility and health, you must correct the issue before shutting down the impaired controller; see Synchronize a node with the cluster.

Steps

1. If AutoSupport is enabled, suppress automatic case creation by invoking an AutoSupport message: `system node autosupport invoke -node * -type all -message MAINT=number_of_hours_downh`

   The following AutoSupport message suppresses automatic case creation for two hours: `cluster1:*> system node autosupport invoke -node * -type all -message MAINT=2h`

2. Disable automatic giveback from the console of the healthy controller: `storage failover modify -node local -auto-giveback false`
3. Take the impaired controller to the LOADER prompt:

If the impaired controller is displaying…	Then…
The LOADER prompt	Go to the next step.
`Waiting for giveback…`	Press Ctrl-C, and then respond `y` when prompted.
System prompt or password prompt (enter system password)	Take over or halt the impaired controller from the healthy controller: `storage failover takeover -ofnode` *`impaired_node_name`* When the impaired controller shows Waiting for giveback…, press Ctrl-C, and then respond `y`.

Step 2: Replace I/O modules

To replace an I/O module, locate it within the chassis and follow the specific sequence of steps.

1. If you are not already grounded, properly ground yourself.
2. Unplug any cabling associated with the target I/O module.

   Make sure that you label the cables so that you know where they came from.

3. Remove the target I/O module from the chassis:
   a. Depress the lettered and numbered cam button.

      The cam button moves away from the chassis.

   b. Rotate the cam latch down until it is in a horizontal position.

      The I/O module disengages from the chassis and moves about 1/2 inch out of the I/O slot.

   c. Remove the I/O module from the chassis by pulling on the pull tabs on the sides of the module face.

      Make sure that you keep track of which slot the I/O module was in.

      Animation - Remove/install I/O module

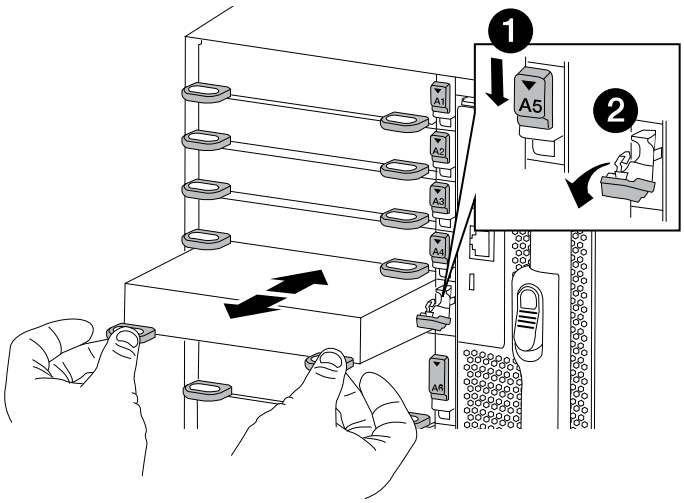

1	Lettered and numbered I/O cam latch
2	I/O cam latch completely unlocked

4. Set the I/O module aside.
5. Install the replacement I/O module into the chassis by gently sliding the I/O module into the slot until the lettered and numbered I/O cam latch begins to engage with the I/O cam pin, and then push the I/O cam latch all the way up to lock the module in place.
6. Recable the I/O module, as needed.

Step 3: Reboot the controller after I/O module replacement

After you replace an I/O module, you must reboot the controller module.

If the new I/O module is not the same model as the failed module, you must first reboot the BMC.

Steps

1. Reboot the BMC if the replacement module is not the same model as the old module:
   a. From the LOADER prompt, change to advanced privilege mode: `priv set advanced`
   b. Reboot the BMC: `sp reboot`
2. From the LOADER prompt, reboot the node: `bye`

   This reinitializes the PCIe cards and other components and reboots the node.

3. If your system is configured to support 10 GbE cluster interconnect and data connections on 40 GbE NICs, convert these ports to 10 GbE connections by using the `nicadmin convert` command from Maintenance mode. See Convert 40GbE NIC ports into multiple 10GbE ports for 10GbE connectivity for more information.

   Be sure to exit Maintenance mode after completing the conversion.

4. Return the node to normal operation: `storage failover giveback -ofnode impaired_node_name`
5. If automatic giveback was disabled, reenable it: `storage failover modify -node local -auto -giveback true`

Step 4: Return the failed part to NetApp

Return the failed part to NetApp, as described in the RMA instructions shipped with the kit. See the Part Return & Replacements page for further information.

Add an I/O module - FAS9500

You can add an I/O module to your system by either replacing a NIC or storage adapter with a new one in a fully-populated system, or by adding a new NIC or storage adapter into an empty chassis slot in your system.

Before you begin

- Check the NetApp Hardware Universe to make sure that the new I/O module is compatible with your system and version of ONTAP you're running.
- If multiple slots are available, check the slot priorities in NetApp Hardware Universe and use the best one available for your I/O module.
- To non-disruptively add an I/O module, you must take over the target controller, remove the slot blanking cover in the target slot or remove an existing I/O module, add the new or replacement I/O module, and then giveback the target controller.
- Make sure that all other components are functioning properly.

Option 1: Add the I/O module to a system with open slots

You can add an I/O module into an empty module slot in your system.

Step 1: Shut down the impaired node

Shut down or take over the impaired controller using one of the following options.

Option 1: Most systems

To shut down the impaired controller, you must determine the status of the controller and, if necessary, take over the controller so that the healthy controller continues to serve data from the impaired controller storage.

About this task

If you have a cluster with more than two nodes, it must be in quorum. If the cluster is not in quorum or a healthy controller shows false for eligibility and health, you must correct the issue before shutting down the impaired controller; see Synchronize a node with the cluster.

Steps

1. If AutoSupport is enabled, suppress automatic case creation by invoking an AutoSupport message: `system node autosupport invoke -node * -type all -message MAINT=number_of_hours_downh`

   The following AutoSupport message suppresses automatic case creation for two hours: `cluster1:*> system node autosupport invoke -node * -type all -message MAINT=2h`

2. Disable automatic giveback from the console of the healthy controller: `storage failover modify -node local -auto-giveback false`
3. Take the impaired controller to the LOADER prompt:

If the impaired controller is displaying…	Then…
The LOADER prompt	Go to the next step.
`Waiting for giveback…`	Press Ctrl-C, and then respond `y` when prompted.
System prompt or password prompt (enter system password)	Take over or halt the impaired controller from the healthy controller: `storage failover takeover -ofnode` *`impaired_node_name`* When the impaired controller shows Waiting for giveback…, press Ctrl-C, and then respond `y`.

Option 2: Controller is in a MetroCluster

Do not use this procedure if your system is in a two-node MetroCluster configuration.

To shut down the impaired controller, you must determine the status of the controller and, if necessary, take over the controller so that the healthy controller continues to serve data from the impaired controller storage.

- If you have a cluster with more than two nodes, it must be in quorum. If the cluster is not in quorum or a healthy controller shows false for eligibility and health, you must correct the issue before shutting down the impaired controller; see Synchronize a node with the cluster.
- If you have a MetroCluster configuration, you must have confirmed that the MetroCluster

Configuration State is configured and that the nodes are in an enabled and normal state (`metrocluster node show`).

Steps

1. If AutoSupport is enabled, suppress automatic case creation by invoking an AutoSupport message: `system node autosupport invoke -node * -type all -message MAINT=number_of_hours_downh`

   The following AutoSupport message suppresses automatic case creation for two hours: `cluster1:*> system node autosupport invoke -node * -type all -message MAINT=2h`

2. Disable automatic giveback from the console of the healthy controller: `storage failover modify –node local -auto-giveback false`
3. Take the impaired controller to the LOADER prompt:

If the impaired controller is displaying…	Then…
The LOADER prompt	Go to the next Step.
Waiting for giveback…	Press Ctrl-C, and then respond `y` when prompted.
System prompt or password prompt (enter system password)	Take over or halt the impaired controller from the healthy controller: `storage failover takeover -ofnode` *`impaired_node_name`* When the impaired controller shows Waiting for giveback…, press Ctrl-C, and then respond `y`.

Step 2: Add I/O modules

1. If you are not already grounded, properly ground yourself.
2. Remove the target slot blanking cover:
   a. Depress the lettered and numbered cam latch.
   b. Rotate the cam latch down until it is the open position.
   c. Remove the blanking cover.
3. Install the I/O module:
   a. Align the I/O module with the edges of the slot.
   b. Slide the I/O module into the slot until the lettered and numbered I/O cam latch begins to engage with the I/O cam pin.
   c. Push the I/O cam latch all the way up to lock the module in place.
4. If the replacement I/O module is a NIC, cable the module to the data switches.

> Make sure that any unused I/O slots have blanks installed to prevent possible thermal issues.

5. Reboot the controller from the LOADER prompt: *bye*

> This reinitializes the PCIe cards and other components and reboots the node.

6. Give back the node from the partner node. `storage failover giveback -ofnode target_node_name`
7. Enable automatic giveback if it was disabled: `storage failover modify -node local -auto -giveback true`
8. If you are using slots 3 and/or 7 for networking, use the `storage port modify -node <node name> -port <port name> -mode network` command to convert the slot for networking use.
9. Repeat these steps for controller B.
10. If you installed a storage I/O module, install and cable your SAS shelves, as described in Hot-adding a SAS shelf.

Option 2: Add an I/O module in a system with no open slots

If your system is fully populated, you can change an I/O module in an I/O slot by removing an existing I/O module and replacing it with a different I/O module.

1. If you are:

Replacing a…	Then…
NIC I/O module with the same the same number of ports	The LIFs will automatically migrate when its controller module is shut down.
NIC I/O module with fewer ports	Permanently reassign the affected LIFs to a different home port. See Migrating a LIF for information about using System Manager to permanently move the LIFs.
NIC I/O module with a storage I/O module	Use System Manager to permanently migrate the LIFs to different home ports, as described in Migrating a LIF.

Step 1: Shut down the impaired node

Shut down or take over the impaired controller using one of the following options.

Option 1: Most systems

To shut down the impaired controller, you must determine the status of the controller and, if necessary, take over the controller so that the healthy controller continues to serve data from the impaired controller storage.

About this task

If you have a cluster with more than two nodes, it must be in quorum. If the cluster is not in quorum or a healthy controller shows false for eligibility and health, you must correct the issue before shutting down the impaired controller; see Synchronize a node with the cluster.

Steps

1. If AutoSupport is enabled, suppress automatic case creation by invoking an AutoSupport message: `system node autosupport invoke -node * -type all -message MAINT=number_of_hours_downh`

   The following AutoSupport message suppresses automatic case creation for two hours: `cluster1:*> system node autosupport invoke -node * -type all -message MAINT=2h`

2. Disable automatic giveback from the console of the healthy controller: `storage failover modify -node local -auto-giveback false`
3. Take the impaired controller to the LOADER prompt:

If the impaired controller is displaying…	Then…
The LOADER prompt	Go to the next step.
`Waiting for giveback…`	Press Ctrl-C, and then respond `y` when prompted.
System prompt or password prompt (enter system password)	Take over or halt the impaired controller from the healthy controller: `storage failover takeover -ofnode` *`impaired_node_name`* When the impaired controller shows Waiting for giveback…, press Ctrl-C, and then respond `y`.

Option 2: Controller is in a MetroCluster

Do not use this procedure if your system is in a two-node MetroCluster configuration.

To shut down the impaired controller, you must determine the status of the controller and, if necessary, take over the controller so that the healthy controller continues to serve data from the impaired controller storage.

- If you have a cluster with more than two nodes, it must be in quorum. If the cluster is not in quorum or a healthy controller shows false for eligibility and health, you must correct the issue before shutting down the impaired controller; see Synchronize a node with the cluster.
- If you have a MetroCluster configuration, you must have confirmed that the MetroCluster

Configuration State is configured and that the nodes are in an enabled and normal state (`metrocluster node show`).

Steps

1. If AutoSupport is enabled, suppress automatic case creation by invoking an AutoSupport message: `system node autosupport invoke -node * -type all -message MAINT=number_of_hours_downh`

   The following AutoSupport message suppresses automatic case creation for two hours: `cluster1:*> system node autosupport invoke -node * -type all -message MAINT=2h`

2. Disable automatic giveback from the console of the healthy controller: `storage failover modify –node local -auto-giveback false`
3. Take the impaired controller to the LOADER prompt:

If the impaired controller is displaying…	Then…
The LOADER prompt	Go to the next Step.
Waiting for giveback…	Press Ctrl-C, and then respond `y` when prompted.
System prompt or password prompt (enter system password)	Take over or halt the impaired controller from the healthy controller: `storage failover takeover -ofnode` *`impaired_node_name`* When the impaired controller shows Waiting for giveback…, press Ctrl-C, and then respond `y`.

Step 2: Replace I/O modules

1. If you are not already grounded, properly ground yourself.
2. Unplug any cabling on the target I/O module.
3. Remove the target I/O module from the chassis:
   a. Depress the lettered and numbered cam latch.

      The cam latch moves away from the chassis.

   b. Rotate the cam latch down until it is in a horizontal position.

      The I/O module disengages from the chassis and moves about 1/2 inch out of the I/O slot.

   c. Remove the I/O module from the chassis by pulling on the pull tabs on the sides of the module face.

      Make sure that you keep track of which slot the I/O module was in.

      Animation - Replace an I/O module

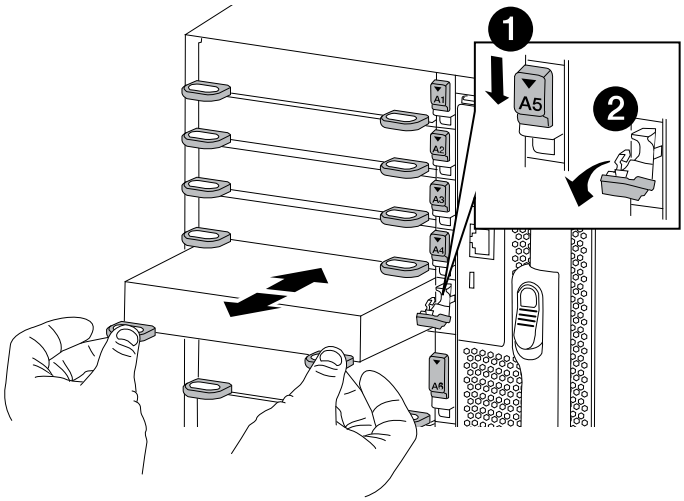

1	Lettered and numbered I/O cam latch
2	I/O cam latch completely unlocked

4. Install the I/O module into the target slot:
   a. Align the I/O module with the edges of the slot.
   b. Slide the I/O module into the slot until the lettered and numbered I/O cam latch begins to engage with the I/O cam pin.
   c. Push the I/O cam latch all the way up to lock the module in place.
5. Repeat the remove and install steps to replace additional modules for controller A.
6. If the replacement I/O module is a NIC, cable the module or modules to the data switches.

   This reinitializes the PCIe cards and other components and reboots the node.

7. Reboot the controller from the LOADER prompt:
   a. Check the version of BMC on the controller: `system service-processor show`
   b. Update the BMC firmware if needed: `system service-processor image update`
   c. Reboot the node: `bye`

   This reinitializes the PCIe cards and other components and reboots the node.

   If you encounter an issue during reboot, see BURT 1494308 - Environment shutdown might be triggered during I/O module replacement

8. Give back the node from the partner node. `storage failover giveback -ofnode target_node_name`
9. Enable automatic giveback if it was disabled: `storage failover modify -node local -auto -giveback true`
10. If you added:

If I/O module is a…	Then…
NIC module in slots 3 or 7,	Use the `storage port modify -node *<node name> -port *<port name> -mode network` command for each port.
Storage module	Install and cable your SAS shelves, as described in Hot-adding a SAS shelf.

11. Repeat these steps for controller B.

Copyright information

Copyright © 2024 NetApp, Inc. All Rights Reserved. Printed in the U.S. No part of this document covered by copyright may be reproduced in any form or by any means—graphic, electronic, or mechanical, including photocopying, recording, taping, or storage in an electronic retrieval system—without prior written permission of the copyright owner.

Software derived from copyrighted NetApp material is subject to the following license and disclaimer:

THIS SOFTWARE IS PROVIDED BY NETAPP “AS IS” AND WITHOUT ANY EXPRESS OR IMPLIED WARRANTIES, INCLUDING, BUT NOT LIMITED TO, THE IMPLIED WARRANTIES OF MERCHANTABILITY AND FITNESS FOR A PARTICULAR PURPOSE, WHICH ARE HEREBY DISCLAIMED. IN NO EVENT SHALL NETAPP BE LIABLE FOR ANY DIRECT, INDIRECT, INCIDENTAL, SPECIAL, EXEMPLARY, OR CONSEQUENTIAL DAMAGES (INCLUDING, BUT NOT LIMITED TO, PROCUREMENT OF SUBSTITUTE GOODS OR SERVICES; LOSS OF USE, DATA, OR PROFITS; OR BUSINESS INTERRUPTION) HOWEVER CAUSED AND ON ANY THEORY OF LIABILITY, WHETHER IN CONTRACT, STRICT LIABILITY, OR TORT (INCLUDING NEGLIGENCE OR OTHERWISE) ARISING IN ANY WAY OUT OF THE USE OF THIS SOFTWARE, EVEN IF ADVISED OF THE POSSIBILITY OF SUCH DAMAGE.

NetApp reserves the right to change any products described herein at any time, and without notice. NetApp assumes no responsibility or liability arising from the use of products described herein, except as expressly agreed to in writing by NetApp. The use or purchase of this product does not convey a license under any patent rights, trademark rights, or any other intellectual property rights of NetApp.

The product described in this manual may be protected by one or more U.S. patents, foreign patents, or pending applications.

LIMITED RIGHTS LEGEND: Use, duplication, or disclosure by the government is subject to restrictions as set forth in subparagraph (b)(3) of the Rights in Technical Data -Noncommercial Items at DFARS 252.227-7013 (FEB 2014) and FAR 52.227-19 (DEC 2007).

Data contained herein pertains to a commercial product and/or commercial service (as defined in FAR 2.101) and is proprietary to NetApp, Inc. All NetApp technical data and computer software provided under this Agreement is commercial in nature and developed solely at private expense. The U.S. Government has a non-exclusive, non-transferrable, nonsublicensable, worldwide, limited irrevocable license to use the Data only in connection with and in support of the U.S. Government contract under which the Data was delivered. Except as provided herein, the Data may not be used, disclosed, reproduced, modified, performed, or displayed without the prior written approval of NetApp, Inc. United States Government license rights for the Department of Defense are limited to those rights identified in DFARS clause 252.227-7015(b) (FEB 2014).

Trademark information

NETAPP, the NETAPP logo, and the marks listed at http://www.netapp.com/TM are trademarks of NetApp, Inc. Other company and product names may be trademarks of their respective owners.