Install cabinet

Install and maintain

NetApp
March 22, 2024

This PDF was generated from https://docs.netapp.com/us-en/ontap-systems/platform-supplemental/42u-1280mm-install.html on March 22, 2024. Always check docs.netapp.com for the latest.

Table of Contents

Install cabinet . . . 1
- Install a system cabinet . . . 1
- Install the cabinet interconnect kit . . . 1
- Install the bolt-down kit . . . 7
- Install additional support rails . . . 8
- Install equipment in the system cabinet . . . 9
- Power on the system cabinet . . . 10

Install cabinet

Install a system cabinet

You can order a system cabinet with NetApp storage controllers and disk shelves installed in it or an empty system cabinet if you already have NetApp equipment. Several system cabinets can be connected together by using the optional interconnect kit, and they can be anchored to the data center floor by using the optional bolt-down kit.

Install the cabinet interconnect kit

You can connect system cabinets together by using the optional cabinet interconnect kit. It is recommended that you install the kit to prevent the cabinets from pulling apart and damaging system cables.

1. Place the system cabinets close together.

   The cabinets should be arranged similarly to the following illustration, with the cabinet with the controller modules in the middle, and the cabinets with additional disk shelves on either side. The sides of the cabinets should be close, but do not need to touch each other yet.

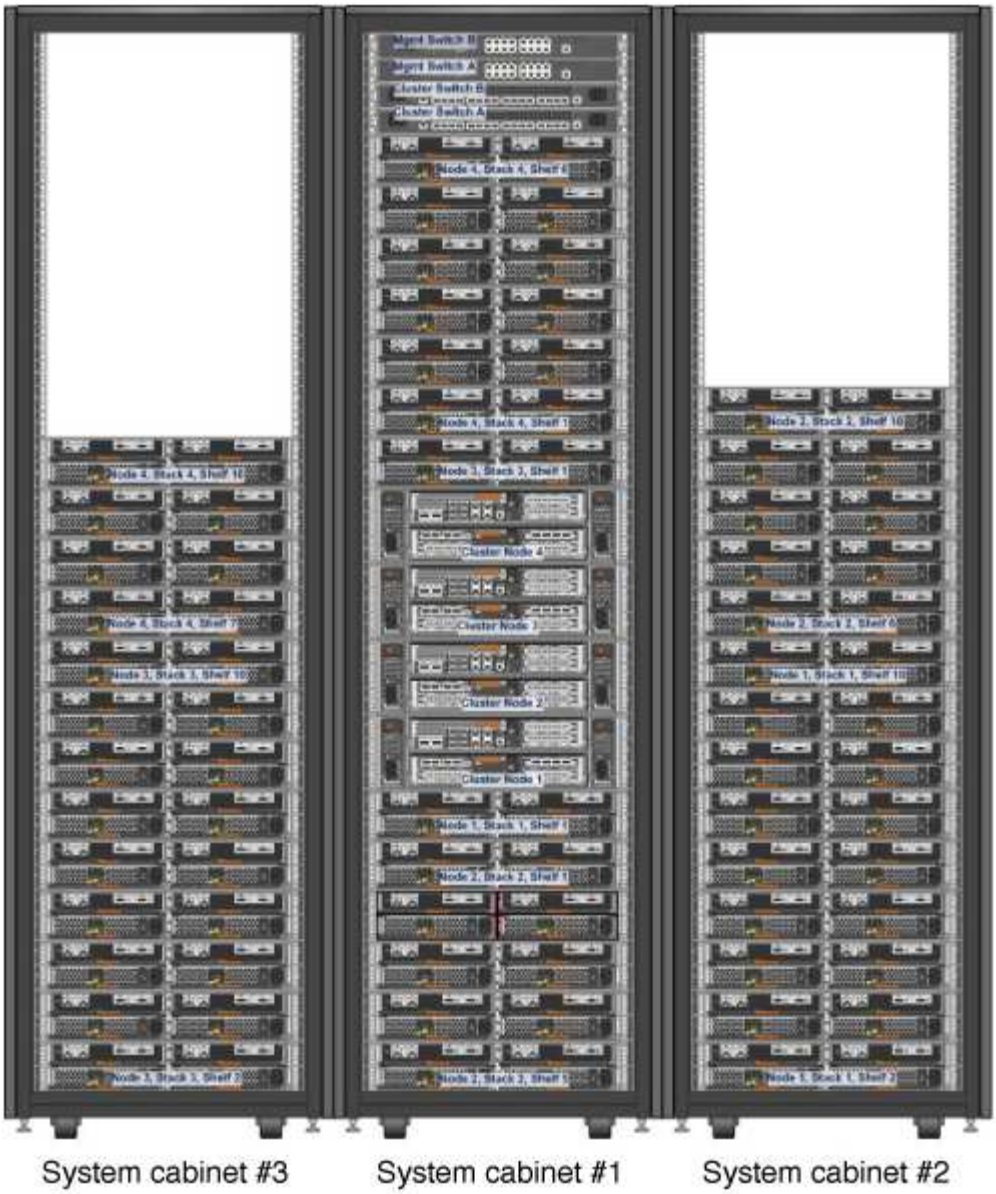

2. If you are installing the interconnect kit with the side panels on as recommended, reinstall the side panels that were removed during unpacking:
   a. Lift the side panel, tilting it about 15 degrees away from the system cabinet bottom, and then hang it over the lip at the top of the system cabinet frame.
   b. Gently push the side panel against the cabinet frame, and then lock it in place with the key.
   c. Repeat these substeps for the remaining side panels.
3. If you are installing the interconnect kit with the side panels removed, remove the front door whose hinges are on the edge where the cabinets meet:
   a. Unlock and open the front door that is being removed.
   b. Use the following illustration for reference to unplug the power to the illuminated bezel:

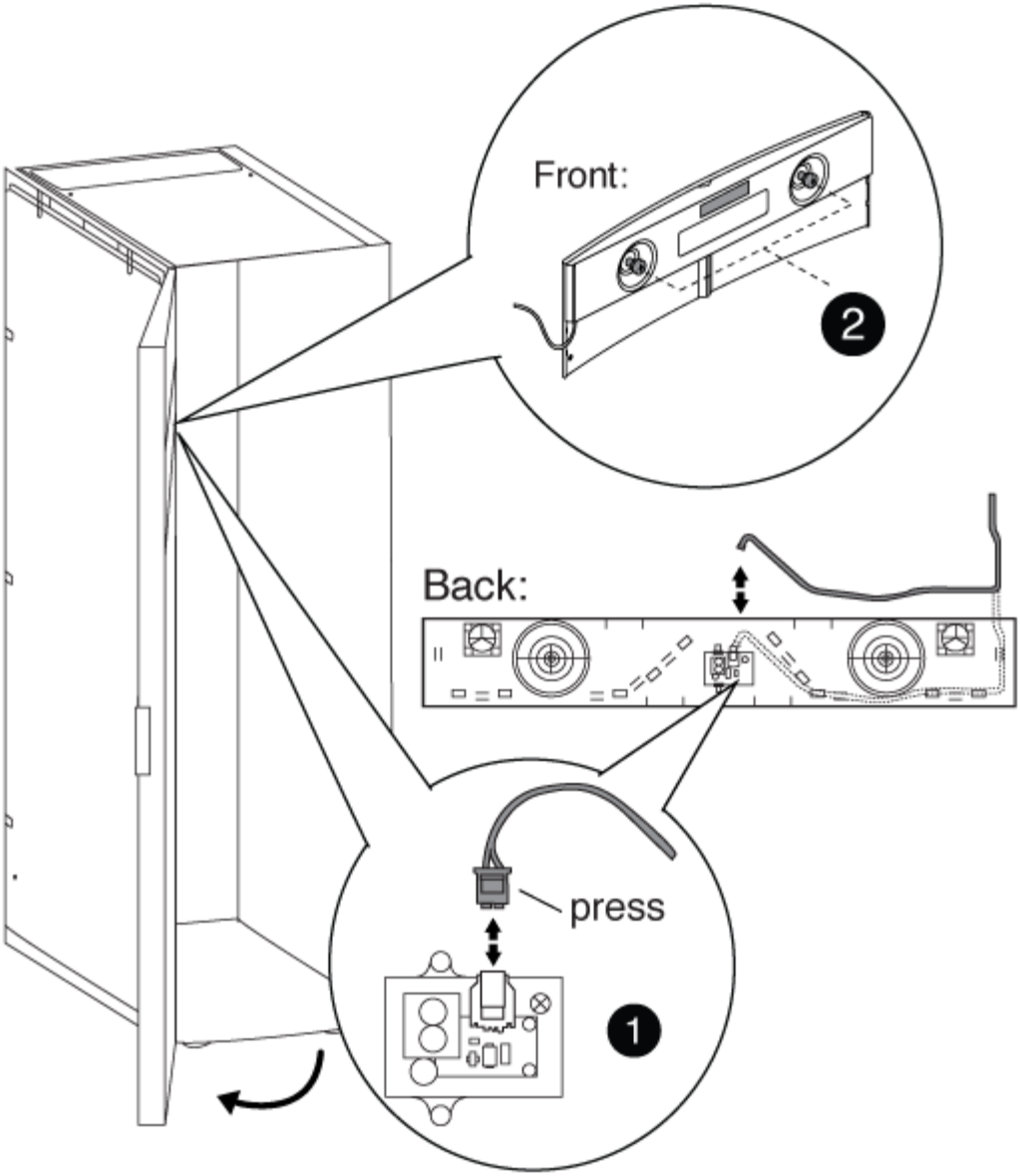

1	
Illuminated bezel circuit board and cable	
2	
Back panel and thumbscrews	

c. Use the following illustration for reference to remove the front door:

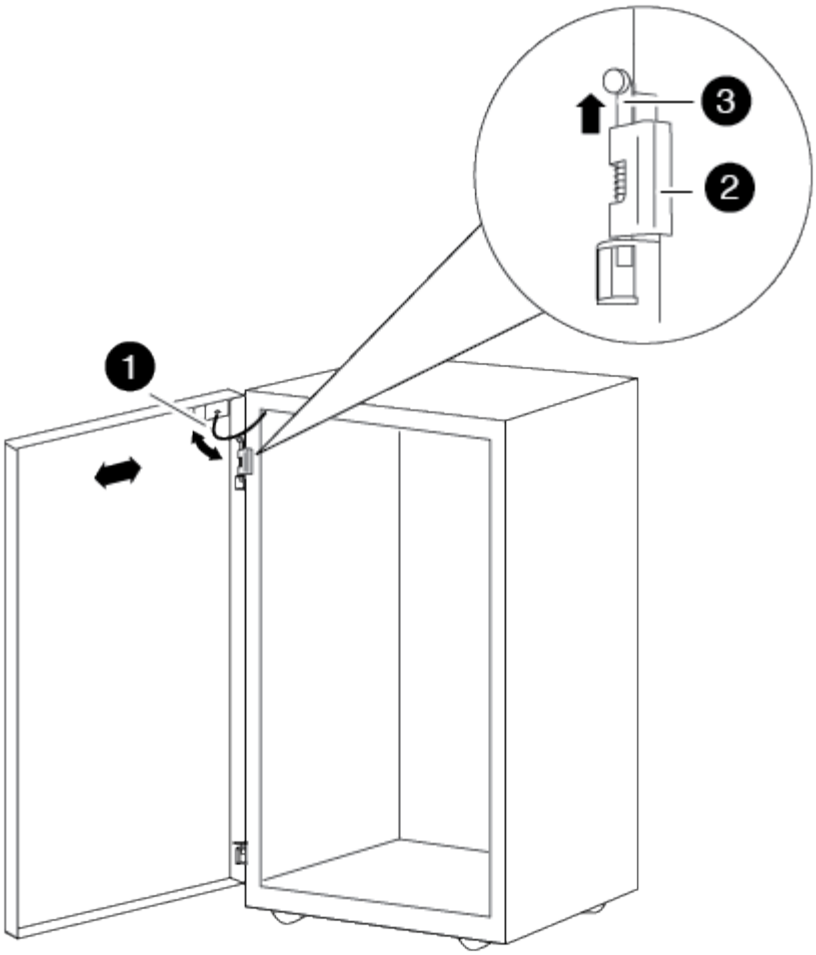

1	
Door grounding cable	
2	
Door top hinge	
3	
Hinge pin	

Make sure that you set the removed doors in a safe place so that they are not accidently damaged.

4. Remove the rear door whose hinges are on the edge where the cabinets meet:
   a. Unlock and open the rear door that you are removing.
   b. Lift the top hinge pin until it clears the bottom of the hinge.
   c. Gently tip the top of the door away from the system cabinet frame, and then release the hinge pin.
   d. Lift the door off the bottom hinge, and then set the door aside.

5. Move the system cabinets completely together, and then align and level them by adjusting the four leveling feet at the bottom of the system cabinets.
6. Install the interconnect brackets.
   - Use the following illustration for reference if you are installing the interconnect brackets with the system cabinet side panels on, as recommended:

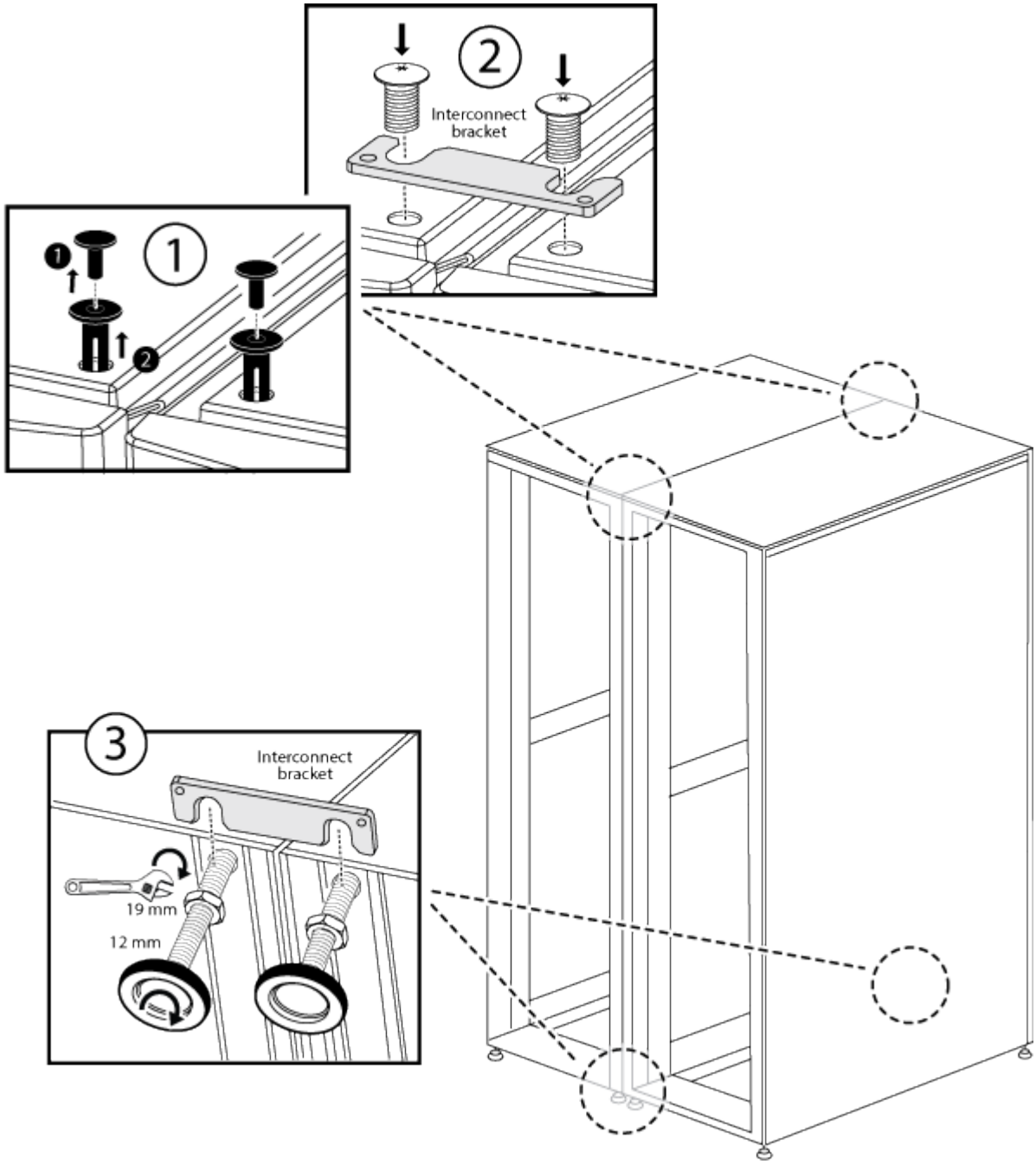

❶	
Plastic push-in rivets on the system cabinet top	
❷	

Top interconnect bracket	
❸	
Bottom interconnect bracket	

- Use the following illustration for reference if you are installing the interconnect brackets with the system cabinet side panels off:

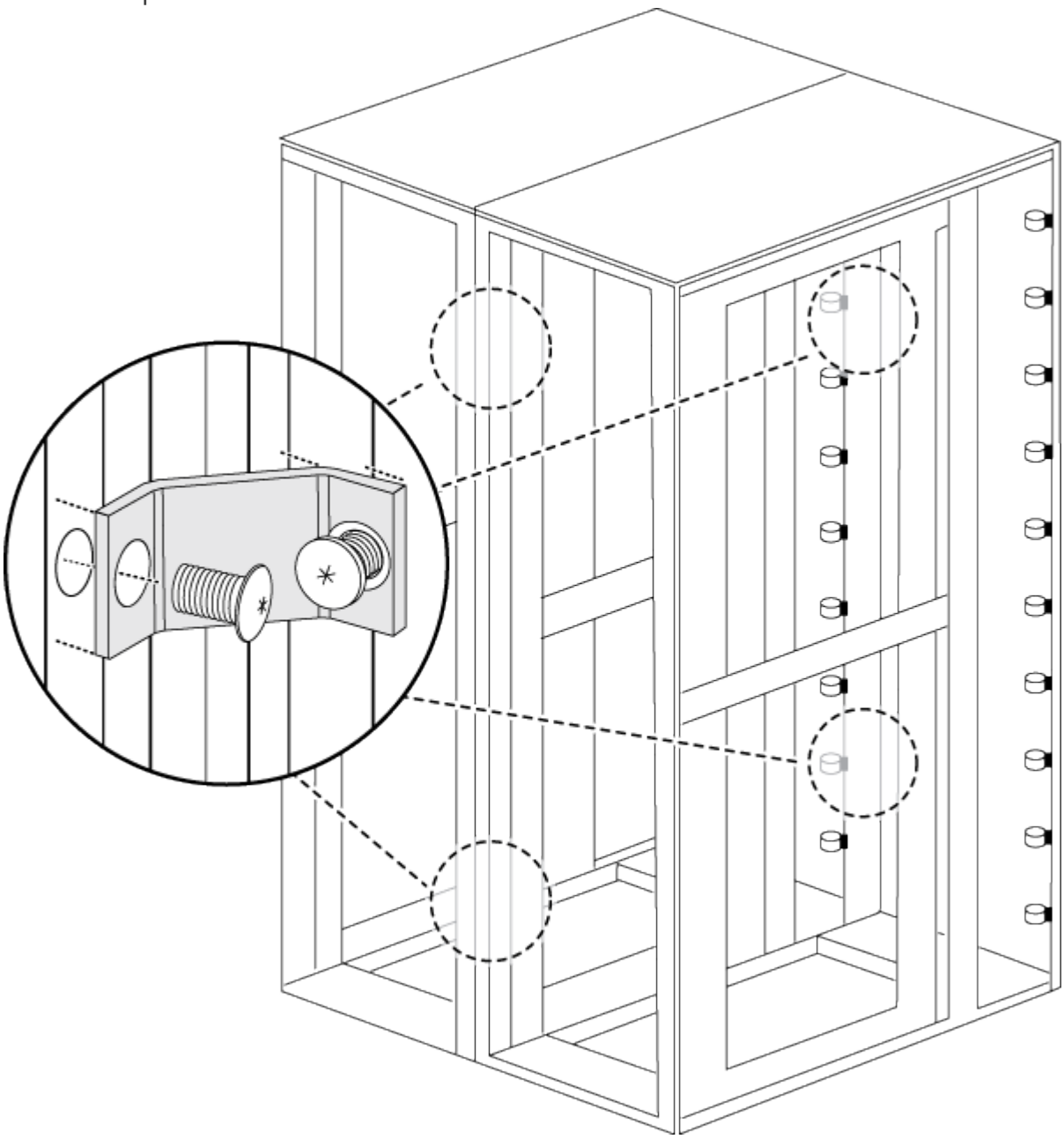

7. Repeat the process for any remaining system cabinets.
8. Tighten all interconnect bracket screws.

Install the bolt-down kit

You can secure the system cabinet to the floor by installing the optional bolt-down kit. Installing the kit prevents the system cabinets from being rolled out of position.

You must supply the appropriate anchor bolt for your floor for each bolt-down bracket.

1. Mark the area on your floor where the system cabinet will be installed, and then roll the cabinet into place.

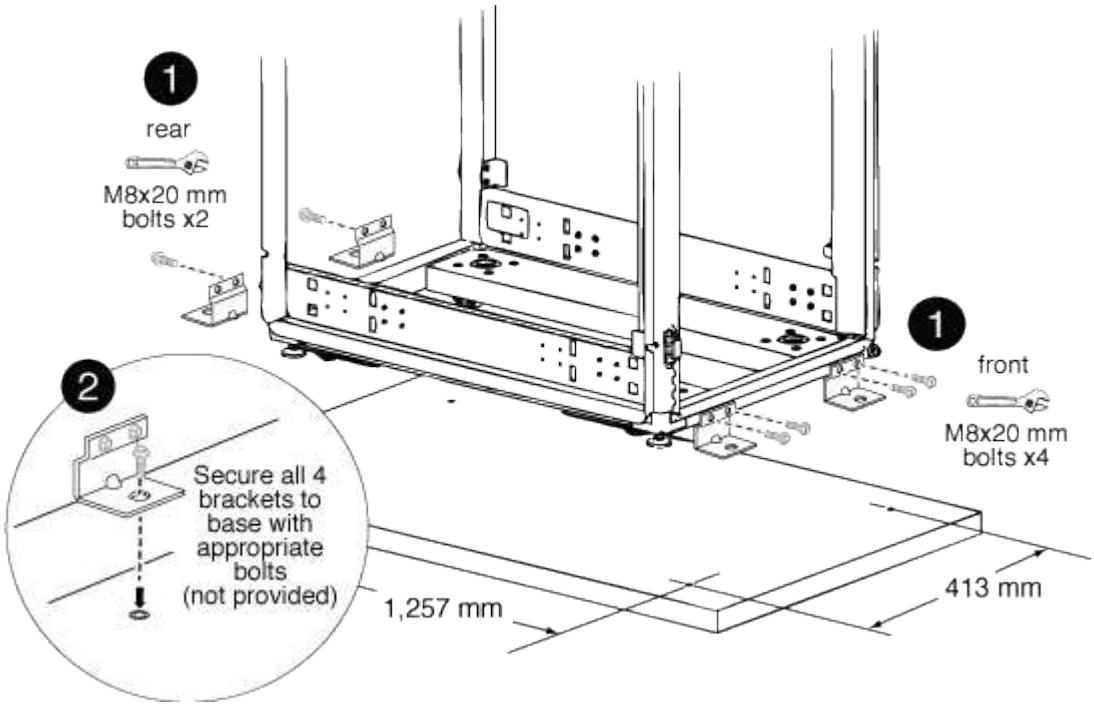

1	
Front and rear bolt-down brackets	
2	
Location of floor anchor point on the bracket	

2. Mark the anchoring points where the rear bolt-down brackets will be anchored to the floor, and then drill the holes for the brackets.

   Be sure to use the appropriate bolt sizes and type for your floor.

3. If the bolt-down brackets are too low to align with the mount points on the system cabinet frame, place a spacer bracket over the hole in the floor.
4. Loosely bolt the rear brackets to the floor, and then using the kit bolts, bolt the brackets to the cabinet frame.
5. Mark the anchoring points where the front bolt-down brackets will be anchored to the floor, and then drill the holes for the brackets.

6. If the bolt-down brackets are too low to align with the mount points on the system cabinet frame, place a spacer bracket over the hole in the floor.
7. Bolt the front brackets to the floor, and then using the kit bolts, bolt the brackets to the cabinet frame.
8. Lower the leveling feet as needed, and then tighten the rear bolt-down brackets to the floor.

Install additional support rails

Your system cabinet has some support rails already installed in it. If you need additional support rails for your system, you must install them before installing your system components.

This task applies to all controller and disk shelves except the DS212C and the DE212C disk shelves. Use the instructions in the rail kit flyer applicable to those two disk shelves.

Installing a DE212C or DS212C Shelf in a Two-Post or Four-Post Rack

1. Determine how much space your equipment requires.

   Calculate the amount of U space (1.75 inches per U) the equipment requires, based on the equipment height, and then determine where the equipment will be installed in the system cabinet based on available space.

2. Locate where you need to install the support rails, and then install them using the following illustration for reference:

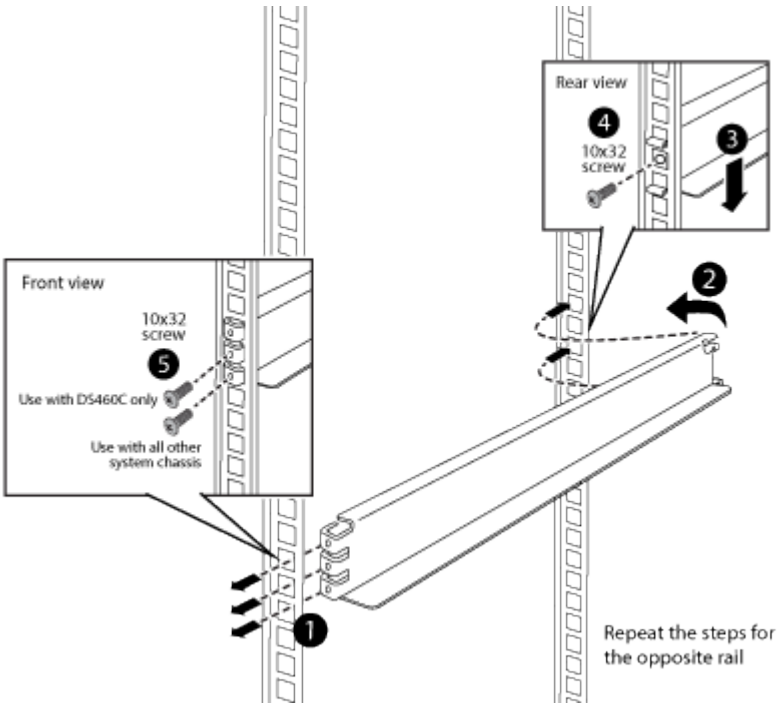

3. If your equipment mounting flanges extend beyond the screw holes in the support rail, install cage nuts above the support rail, where needed.

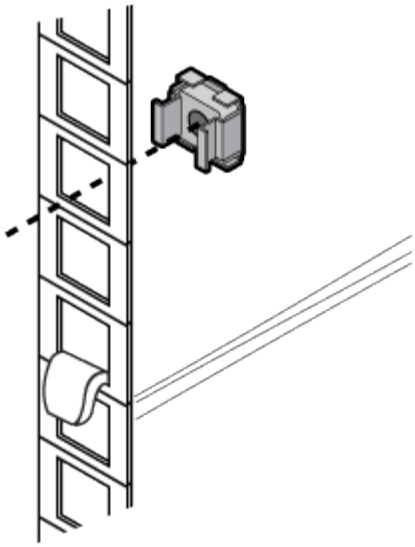

Install equipment in the system cabinet

After you have installed any additional support rails into the system cabinet, you can add more system components to your prepopulated system cabinet or add your existing system components to an empty system cabinet.

1. Unlock and open the rear doors of the system cabinet and the front door, if it is not already open.
2. Install your equipment into the system cabinet as described in the installation instructions accompanying your equipment.

   The storage controllers should be in the middle of the system cabinet. The disk shelves should be above and below the storage controllers. Any switches should be at the very top of the system cabinet.

   > If your equipment mounting flanges extend beyond the screw holes in the support rail, install cage nuts above the support rail where needed to secure the equipment to the cabinet upright.

3. Install blanking panels over any empty bays in the system cabinet.

   If you receive the system cabinet with equipment already installed, you must remove the tie-down rails on top of the equipment that is directly below empty cabinet bays, as shown in the following illustration:

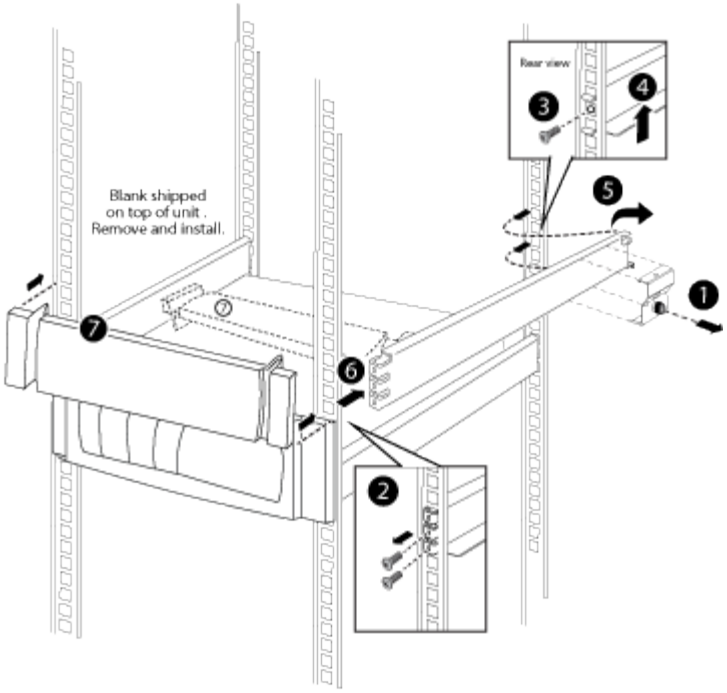

4. Reinstall the front and rear system cabinet doors.

Power on the system cabinet

You must connect the system components to the PDUs, route the PDU cables to the AC power sources, connect them to the power sources, and power on the system.

> To prevent a system outage if a PDU fails, do not plug both power cables from any component into one PDU. Distribute the load across the PDS that are plugged into different circuits, as shown in the illustration.

You must have separate power circuits available for each PDU in your system cabinet.

1. Connect your equipment to the PDUs:
   a. Connect the controller power supplies to different PDUs connected to different power sources.
   b. Connect the drive shelf power supplies to different PDUs connected to different power sources.
   c. Connect any switch power supplies to different PDUs connected to different power sources.

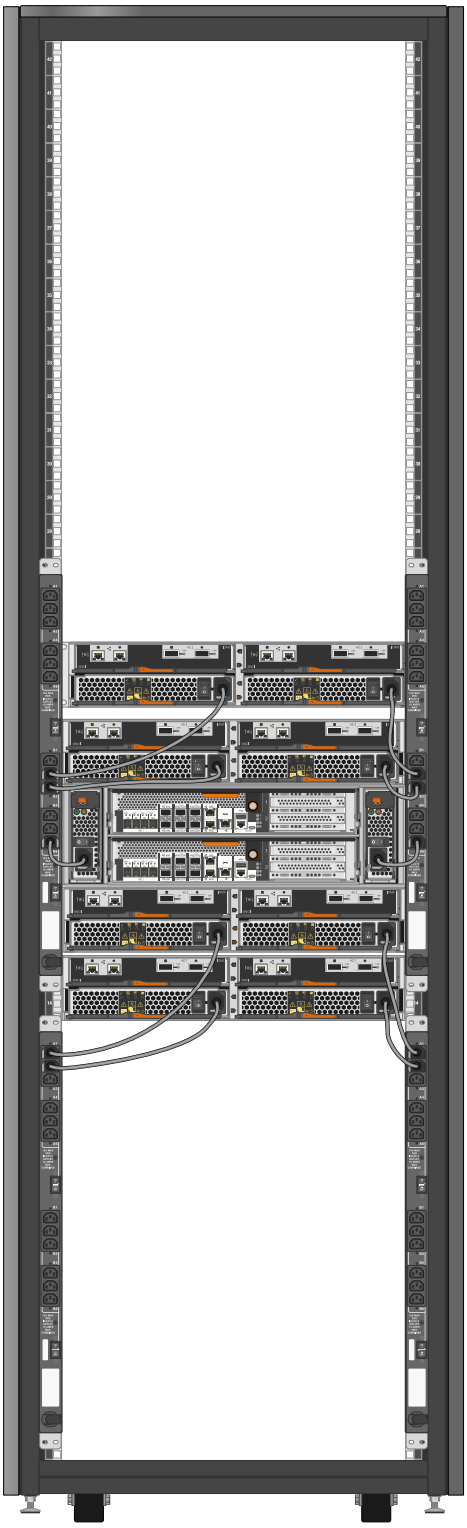

Feed the PDU power cables through one of the following openings in the system cabinet:

- The top of the system cabinet
- Between the rear door bottom and frame of the system cabinet
- Through the floor opening and under the system cabinet

2. Turn off the power switches or circuit breakers on the PDUs.
3. Plug each PDU power cable into individual AC power sources that are on separate AC circuits.

4. Turn on the power switches or circuit breakers to the PDUs.
5. Turn on the power to your components, and then boot the system.
6. Close and lock the system cabinet doors.

Copyright information

Copyright © 2024 NetApp, Inc. All Rights Reserved. Printed in the U.S. No part of this document covered by copyright may be reproduced in any form or by any means—graphic, electronic, or mechanical, including photocopying, recording, taping, or storage in an electronic retrieval system—without prior written permission of the copyright owner.

Software derived from copyrighted NetApp material is subject to the following license and disclaimer:

THIS SOFTWARE IS PROVIDED BY NETAPP “AS IS” AND WITHOUT ANY EXPRESS OR IMPLIED WARRANTIES, INCLUDING, BUT NOT LIMITED TO, THE IMPLIED WARRANTIES OF MERCHANTABILITY AND FITNESS FOR A PARTICULAR PURPOSE, WHICH ARE HEREBY DISCLAIMED. IN NO EVENT SHALL NETAPP BE LIABLE FOR ANY DIRECT, INDIRECT, INCIDENTAL, SPECIAL, EXEMPLARY, OR CONSEQUENTIAL DAMAGES (INCLUDING, BUT NOT LIMITED TO, PROCUREMENT OF SUBSTITUTE GOODS OR SERVICES; LOSS OF USE, DATA, OR PROFITS; OR BUSINESS INTERRUPTION) HOWEVER CAUSED AND ON ANY THEORY OF LIABILITY, WHETHER IN CONTRACT, STRICT LIABILITY, OR TORT (INCLUDING NEGLIGENCE OR OTHERWISE) ARISING IN ANY WAY OUT OF THE USE OF THIS SOFTWARE, EVEN IF ADVISED OF THE POSSIBILITY OF SUCH DAMAGE.

NetApp reserves the right to change any products described herein at any time, and without notice. NetApp assumes no responsibility or liability arising from the use of products described herein, except as expressly agreed to in writing by NetApp. The use or purchase of this product does not convey a license under any patent rights, trademark rights, or any other intellectual property rights of NetApp.

The product described in this manual may be protected by one or more U.S. patents, foreign patents, or pending applications.

LIMITED RIGHTS LEGEND: Use, duplication, or disclosure by the government is subject to restrictions as set forth in subparagraph (b)(3) of the Rights in Technical Data -Noncommercial Items at DFARS 252.227-7013 (FEB 2014) and FAR 52.227-19 (DEC 2007).

Data contained herein pertains to a commercial product and/or commercial service (as defined in FAR 2.101) and is proprietary to NetApp, Inc. All NetApp technical data and computer software provided under this Agreement is commercial in nature and developed solely at private expense. The U.S. Government has a non-exclusive, non-transferrable, nonsublicensable, worldwide, limited irrevocable license to use the Data only in connection with and in support of the U.S. Government contract under which the Data was delivered. Except as provided herein, the Data may not be used, disclosed, reproduced, modified, performed, or displayed without the prior written approval of NetApp, Inc. United States Government license rights for the Department of Defense are limited to those rights identified in DFARS clause 252.227-7015(b) (FEB 2014).

Trademark information

NETAPP, the NETAPP logo, and the marks listed at http://www.netapp.com/TM are trademarks of NetApp, Inc. Other company and product names may be trademarks of their respective owners.