Reverse cabinet front door

Install and maintain

NetApp
March 22, 2024

This PDF was generated from https://docs.netapp.com/us-en/ontap-systems/platform-supplemental/42u-1280mm-reverse-front-door.html on March 22, 2024. Always check docs.netapp.com for the latest.

Table of Contents

Reverse cabinet front door . . . 1
- Reverse the system cabinet front door . . . 1
- Remove the illuminated badge . . . 1
- Remove the system cabinet door . . . 2
- Move the badge power supply and cabling . . . 2
- Reverse the door hinge and lock catch . . . 5
- Reinstall the door and illuminated badge . . . 7

Reverse cabinet front door

Reverse the system cabinet front door

You can change the direction the front door opens by removing the illuminated badge, door, top hinge, and related hardware, and then installing them on the opposite side of the front of the system cabinet frame.

You need the following tools and equipment to complete the door reversal for system cabinets with illuminated badges:

- A Phillips screwdriver
- A 5-mm Allen wrench; magnetic Allen wrench is recommended
- Needle-nose pliers
- A step ladder so that you can easily access the Allen bolts in the top hinge

Remove the illuminated badge

Removing the illuminated badge requires that you open the system cabinet front door, unplug the power cord from the back of the badge, and then remove the badge components from the system cabinet door.

Use the following illustration along with the following

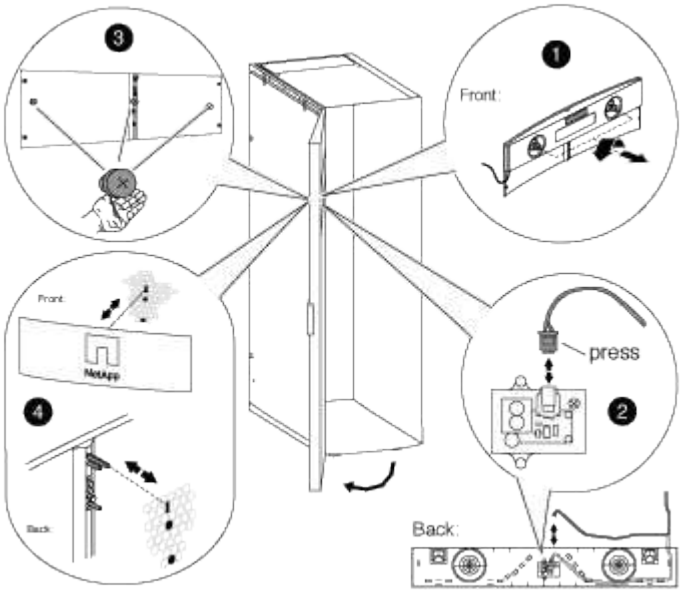

steps:

1. Unlock and open the system cabinet front door.
2. Loosen the captive screws on the badge back panel on the inside of the door, and then gently pull the back panel away from the door mesh.
3. Unplug the power cord from the back panel by pressing the locking clip on the plug, unplugging the cord from the socket, and removing the cable from the back panel.

   Set the back panel aside.

4. Carefully remove the screws from the back of the badge.

> The stems on the thumbscrews are very short. Place your free hand under the screw to catch the thumbscrew if you drop it.

5. Remove the badge from the front of the door and set it aside.

Remove the system cabinet door

You must remove the system cabinet door and side panels to move the illuminated badge and components, and to reverse the door.

1. Open the system cabinet door if it is not already open.
2. Perform the appropriate action depending on whether your cabinets are connected with the interconnect kit.

If your system cabinet is…	Then…
Not connected to another system cabinet	Go to the next step.
Connected to another system cabinet with an interconnect kit	Remove all four interconnect kit brackets and set the brackets and screws in a safe place.

3. Unlock both side panels, disconnect the grounding wires from the side panels, and then remove them and set them aside.
4. Disconnect the grounding wire from the grounding spade located at the top of the door.
5. Unscrew the grounding lug and wire assembly from the system cabinet frame and set it aside.
6. Unscrew the grounding lug assembly from the system cabinet door and set it aside.
7. Lift the top hinge pin until it clears the bottom of the hinge.
8. Gently tip the top of the door away from the system cabinet frame, and then release the hinge pin.
9. Lift the door off the bottom hinge, and set the door aside.

Move the badge power supply and cabling

You must move the power supply and illuminated badge cabling to the opposite side of the system cabinet frame before you reverse the door and reinstall the illuminated badge.

You must have removed the system cabinet door and side panels.

You must move the illuminated badge power supply, power cable, and cabling conduit to the opposite side of the system cabinet when you reverse the system cabinet door. The assembly is designed so that the cable to the badge is on the side of the cabinet where the door hinge is installed.

1. Open the power cable retaining clip, and then disconnect the power cable from the power supply.
2. Remove the power supply housing and power supply, using the illustration for reference:

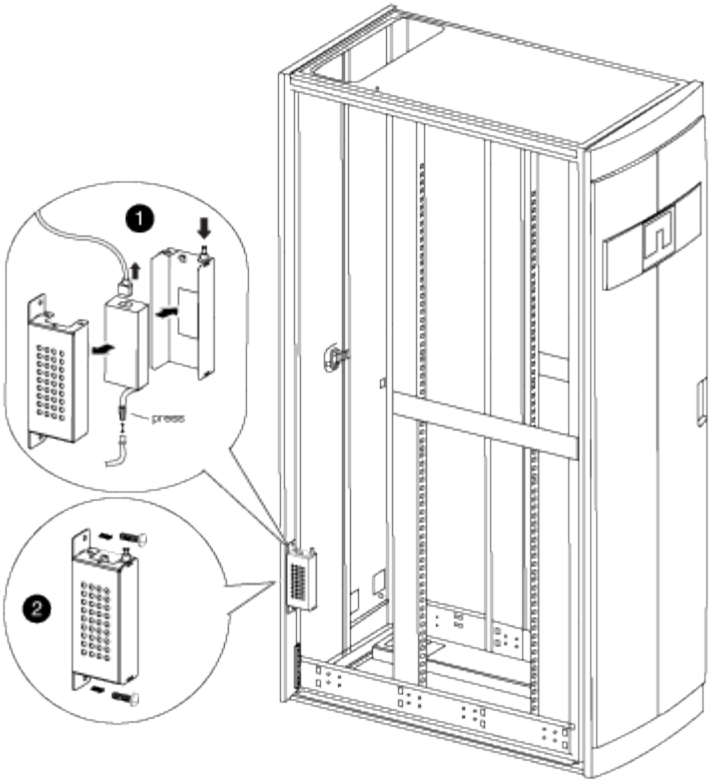

a. Lift the retaining pin on the power supply housing, and then remove the housing cover by rotating it downward and lifting it off the rear power supply housing.

> The power supply is attached to the power supply housing with a hook and loop patch.

b. Disconnect the power supply from the illuminated badge cable, and then set the power supply and power supply cover to the side.

c. Remove the screws from the top and bottom of the power supply housing that is attached to the system cabinet frame, and then remove the power supply housing.

3. Install the power supply and power supply housing on the opposite side of the system cabinet:

   a. Locate the two screw holes next to each other on the cabinet frame, and then attach the top of the power supply housing to the bottom-most of the two screw holes.

   > You might need to remove the bottom cable retention strap, if present.

   b. Secure the bottom of the power supply housing to the system cabinet frame.

   c. Install the power supply cover and power supply by aligning the cover hooks with the power supply back, pulling the plunger up on the cover, rotating the plunger closed, and then releasing the plunger.

4. Remove the bezel power supply conduit by removing the conduit retaining clips from the retaining clips, and then slide the conduit off the power cable.

   Keep the retaining clips and screws for installing the conduit on the opposite side of the cabinet.

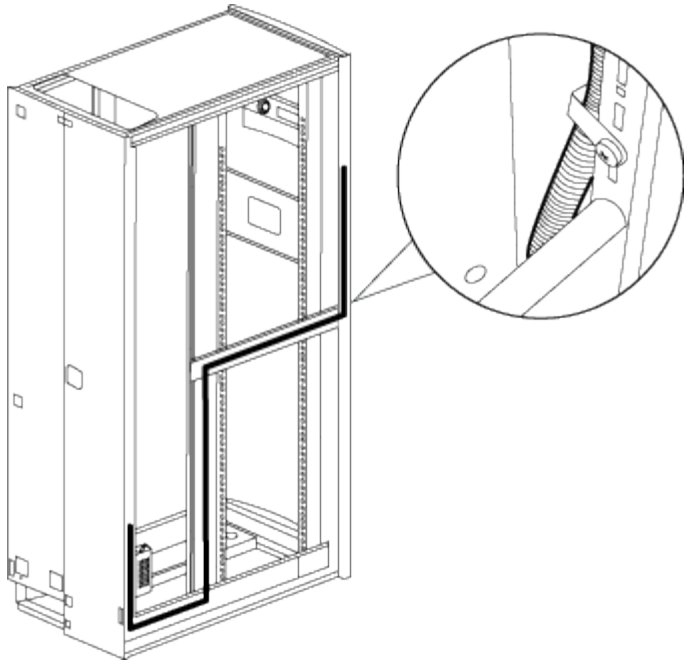

5. Move the badge power cable to the other side of the cabinet:

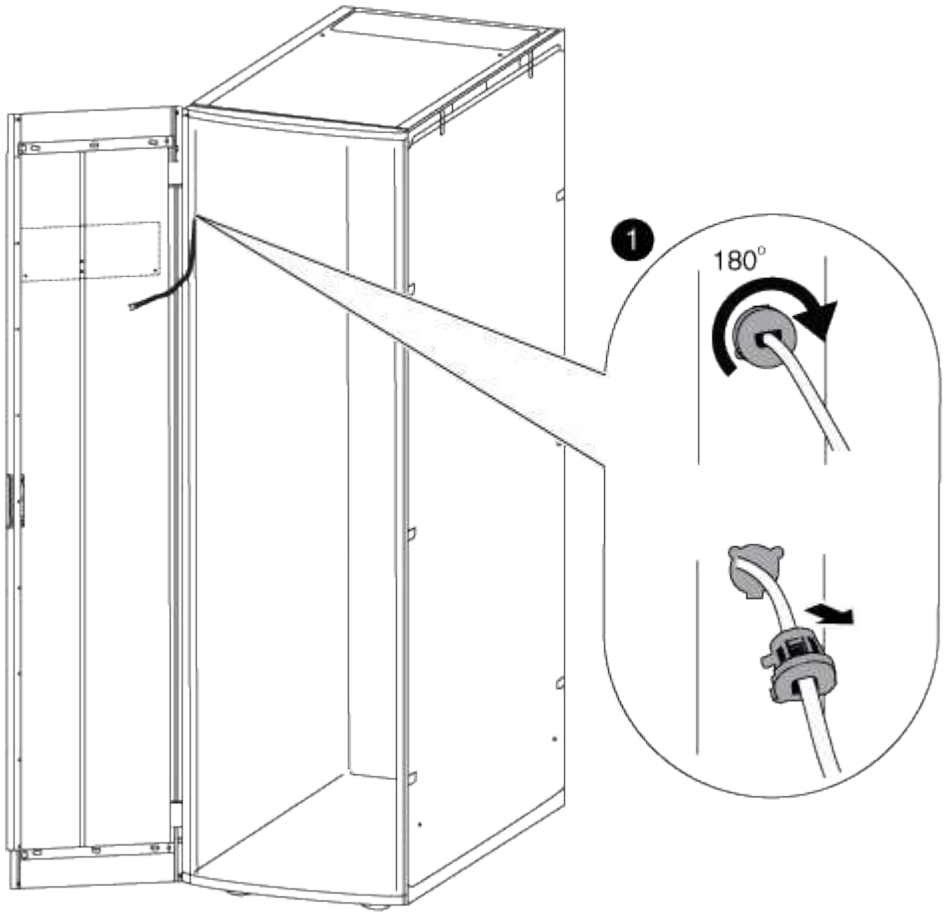

   a. Rotate the rubber cable retainer on the cabinet upright 180° to the right, remove it from the system cabinet frame, and then gently pull the cable out of the system cabinet.
   b. Move the cable to the other side of the cabinet, and then thread it completely through the hole near the top of the cabinet upright.

c. Align the rubber cable retainer with the hole in the frame, push it in as far as it will go, and then rotate the cable retainer 180° to the left to secure it.

d. Run the cable along the cabinet frame to the back of the cabinet.

6. Reinstall the cable conduit:

   a. Slide the conduit over the PDU power cable and route the conduit along the system cabinet frame to the PDU.

   b. Install the conduit retaining clips from the other side of the cabinet over the conduit to secure it to the cabinet frame.

7. Plug the badge cable back into the power supply, but do not reconnect the power supply to the power source.

Reverse the door hinge and lock catch

When reversing the system cabinet door, you must move the system cabinet door hinge and lock catch to the opposite front-side system cabinet upright.

You need the following tools:

- Phillips screwdriver
- 5 mm Allen wrench; magnetic Allen wrench is recommended
- Needle-nose pliers
- Step ladder so that you can easily access the Allen screws in the top hinge

1. Remove the screws securing the top hinge from the system cabinet frame, and set the screws and hinge aside.

   > Be careful when removing the Allen screws to avoid dropping them into the cabinet frame. Spare Allen screws are provided in the spares kit that shipped with your system cabinet.

2. Remove the screws securing the bottom hinge from the system cabinet frame, and set the screws and hinge aside.

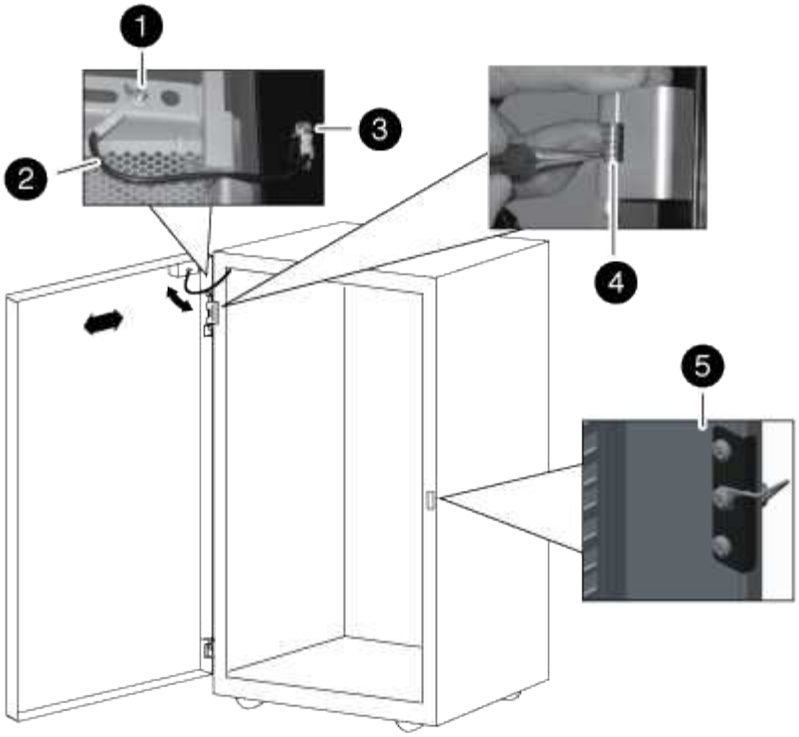

1	
Door grounding screw with grounding wire spade	
2	
Grounding wire	
3	
Frame grounding wire lug	
4	
Top front door hinge with hinge pin held by retaining clip	
5	
Lock catch	

3. Reverse the hinge pin from the top hinge:
   a. Lift the hinge pin and expose the retaining clip on the hinge pin shaft.

b. Using the needle-nose pliers, gently remove the retaining clip from the hinge pin shaft and set it aside.
c. Slide the hinge pin and spring out of the hinge body.
d. Rotate the hinge so that the thread holes are facing the opposite side of the hinge, and then install the hinge pin and spring back into the hinge.
e. Install the hinge retaining clip onto the hinge pin.

   Make sure that you push the retaining clip completely onto the hinge pin.

4. Reinstall the hinges:
   a. Insert the top Allen screw through the system cabinet upright, aligning it with the top threaded hole on the top hinge, and then partially tighten the Allen screw.

      Do not completely tighten the screw until after the second Allen screw is installed.

   b. Insert the bottom Allen screw through the system cabinet upright, aligning it with the bottom threaded hole on the top hinge, and then partially tighten the Allen screw.
   c. Tighten the top and bottom Allen screws.
   d. Repeat these steps for the bottom hinge.
5. Remove the screws from the lock catch, and then move the lock catch to the opposite front-side system cabinet upright.
6. Rotate the catch 180 degrees, and then secure it to the system cabinet upright.

Reinstall the door and illuminated badge

After you move the power supply and components to the other side of the system cabinet and moved the hinges and lock catch, you must reinstall the system cabinet door and the illuminated badge, and then reconnect the badge to the power source.

Reinstall the system cabinet door

After you reverse the door hinge and door catch, you must reinstall the grounding wire and lug assembly and wire, and the system cabinet front door prior to reinstalling the illuminated badge.

1. Rotate the door 180 degrees.
2. Align the bottom of the door with the bottom hinge post, and then seat the door bottom on the hinge post.
3. Lift the top hinge pin so that it clears the hinge housing.
4. Tip the top of the door into the hinge housing so that the hinge pin and door hinge are aligned, and then release the hinge pin.

   Make sure that the hinge pin is seated completely through the door hinge and the bottom of the door hinge housing.

5. Reattach the grounding lug and wire assembly to the system cabinet frame on the same side of the newly reversed front door and reinstall the grounding lug with spade on the top of the system cabinet door.
6. Reattach the grounding wire to the spade on the grounding lug assembly on the system cabinet door.
7. Reinstall either the side panels or the interconnect brackets, as applicable:

- If your system cabinet is not connected to another system cabinet, reinstall the side panels.
- If your system cabinet is connected to another system cabinet with an interconnect kit, reinstall the interconnect brackets.

Reinstall the illuminated badge

After the system cabinet door is installed, you need to install the illuminated badge to complete the door reversal process, and then close and lock the front door.

1. Using the following illustration for reference, reinstall the illuminated badge on the front door of the system cabinet:

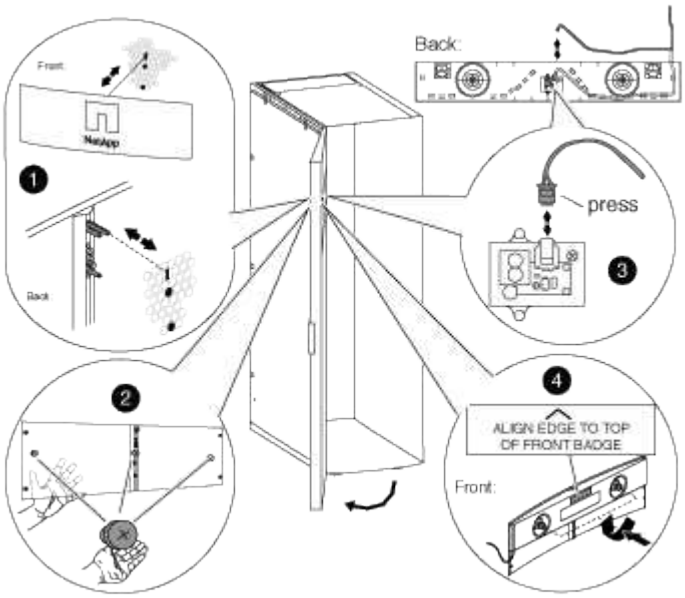

2. Close and lock the front door.

Copyright information

Copyright © 2024 NetApp, Inc. All Rights Reserved. Printed in the U.S. No part of this document covered by copyright may be reproduced in any form or by any means—graphic, electronic, or mechanical, including photocopying, recording, taping, or storage in an electronic retrieval system—without prior written permission of the copyright owner.

Software derived from copyrighted NetApp material is subject to the following license and disclaimer:

THIS SOFTWARE IS PROVIDED BY NETAPP “AS IS” AND WITHOUT ANY EXPRESS OR IMPLIED WARRANTIES, INCLUDING, BUT NOT LIMITED TO, THE IMPLIED WARRANTIES OF MERCHANTABILITY AND FITNESS FOR A PARTICULAR PURPOSE, WHICH ARE HEREBY DISCLAIMED. IN NO EVENT SHALL NETAPP BE LIABLE FOR ANY DIRECT, INDIRECT, INCIDENTAL, SPECIAL, EXEMPLARY, OR CONSEQUENTIAL DAMAGES (INCLUDING, BUT NOT LIMITED TO, PROCUREMENT OF SUBSTITUTE GOODS OR SERVICES; LOSS OF USE, DATA, OR PROFITS; OR BUSINESS INTERRUPTION) HOWEVER CAUSED AND ON ANY THEORY OF LIABILITY, WHETHER IN CONTRACT, STRICT LIABILITY, OR TORT (INCLUDING NEGLIGENCE OR OTHERWISE) ARISING IN ANY WAY OUT OF THE USE OF THIS SOFTWARE, EVEN IF ADVISED OF THE POSSIBILITY OF SUCH DAMAGE.

NetApp reserves the right to change any products described herein at any time, and without notice. NetApp assumes no responsibility or liability arising from the use of products described herein, except as expressly agreed to in writing by NetApp. The use or purchase of this product does not convey a license under any patent rights, trademark rights, or any other intellectual property rights of NetApp.

The product described in this manual may be protected by one or more U.S. patents, foreign patents, or pending applications.

LIMITED RIGHTS LEGEND: Use, duplication, or disclosure by the government is subject to restrictions as set forth in subparagraph (b)(3) of the Rights in Technical Data -Noncommercial Items at DFARS 252.227-7013 (FEB 2014) and FAR 52.227-19 (DEC 2007).

Data contained herein pertains to a commercial product and/or commercial service (as defined in FAR 2.101) and is proprietary to NetApp, Inc. All NetApp technical data and computer software provided under this Agreement is commercial in nature and developed solely at private expense. The U.S. Government has a non-exclusive, non-transferrable, nonsublicensable, worldwide, limited irrevocable license to use the Data only in connection with and in support of the U.S. Government contract under which the Data was delivered. Except as provided herein, the Data may not be used, disclosed, reproduced, modified, performed, or displayed without the prior written approval of NetApp, Inc. United States Government license rights for the Department of Defense are limited to those rights identified in DFARS clause 252.227-7015(b) (FEB 2014).

Trademark information

NETAPP, the NETAPP logo, and the marks listed at http://www.netapp.com/TM are trademarks of NetApp, Inc. Other company and product names may be trademarks of their respective owners.