SAS shelves

Install and maintain

NetApp
March 22, 2024

This PDF was generated from https://docs.netapp.com/us-en/ontap-systems/sas3/install-new-system.html on March 22, 2024. Always check docs.netapp.com for the latest.

Table of Contents

SAS shelves . . . 1
Install and cable . . . 1
Maintain . . . 81

SAS shelves

Install and cable

Install and cable shelves for a new system installation - shelves with IOM12/IOM12B modules

If your new system—HA pair or single-controller configuration—did not come installed in a cabinet, you can install and cable the disk shelves in a rack.

Requirements for installing and cabling disk shelves with IOM12/IOM12B modules for a new system installation

You must meet certain requirements before installing and cabling the disk shelves.

- You must have the installation and setup instructions for your platform model.

  The installation and setup instructions address the complete procedure for your system installation, setup, and configuration. You only use this procedure (*Install and cable shelves for a new system installation*) in conjunction with the platform installation and setup instructions if you need detailed information about installing or cabling the disk shelves to your storage system.

  Installation and setup instructions can be found by navigating to your platform model documentation.

  AFF and FAS System Documentation

- Disk shelves and controllers must not be powered on at this time.
- If you are using mini-SAS HD SAS optical cables, you must have met the rules in Mini-SAS HD SAS optical cable rules.

Considerations for installing and cabling disk shelves with IOM12/IOM12B modules for a new system installation

You should familiarize yourself with aspects and best practices about this procedure before installing and cabling the disk shelves.

General considerations

- Disk shelves with IOM12/IOM12B modules are shipped with shelf IDs preset to 00.

  > If you have an HA pair with at least two stacks, the disk shelf containing the root aggregates for the second stack has the shelf ID preset to 10.

  You must set shelf IDs so they are unique within the HA pair or single-controller configuration. You can manually set shelf IDs or have shelf IDs automatically assigned for all disk shelves in the HA pair or single-controller configuration using a command in maintenance mode. Instructions for both methods are provided.

- Disk shelves containing the root aggregates can be identified by the labels on the disk shelf box and disk shelf chassis.

  The labels show the stack number; for example, **Loop or Stack #: 1** and **Loop or Stack #: 2**. Disk shelves

that do not contain the root aggregates only show the disk shelf serial number on the labels.

- If at system setup and configuration, you do not configure the system to use automatic disk ownership assignment, you need to manually assign disk ownership.
- In-band Alternate Control Path (IBACP) is automatically enabled.

  IBACP is not supported on single-path HA or single-path configurations.

Best practice considerations

- The best practice is to have the current version of the Disk Qualification Package (DQP) installed.

  Having the current version of the DQP installed allows your system to recognize and utilize newly qualified disk drives; therefore, avoiding system event messages about having non-current disk drive information. You also avoid the possible prevention of disk partitioning because disk drives are not recognized. The DQP also notifies you of non-current disk drive firmware.

  NetApp Downloads: Disk Qualification Package

- The best practice is to download and run Config Advisor after a new system installation.

  Running Config Advisor after a new system installation allows you to verify SAS connections are cabled correctly and that shelf IDs are unique within the HA pair or single-controller configuration.

  If any SAS cabling or duplicate shelf ID errors are generated, follow the corrective actions provided.

  You need network access to download Config Advisor.

  NetApp Downloads: Config Advisor

SAS cable handling considerations

- Visually inspect the SAS port to verify the proper orientation of the connector before plugging it in.

  The SAS cable connectors are keyed. When oriented correctly into a SAS port, the connector clicks into place and if the disk shelf power is on at the time, the disk shelf SAS port LNK LED illuminates green. For disk shelves, you insert a SAS cable connector with the pull tab oriented down (on the underside of the connector).

  For controllers, the orientation of SAS ports can vary depending on the platform model; therefore, the correct orientation of the SAS cable connector varies.

- To prevent degraded performance, do not twist, fold, pinch, or step on the cables.

  Cables have a minimum bend radius. Cable manufacturer specifications define the minimum bend radius; however, a general guideline for minimum bend radius is 10 times the cable diameter.

- Using Velcro wraps instead of tie-wraps to bundle and secure system cables allows for easier cable adjustments.

DS460C drive handling considerations

- The drives are packaged separately from the shelf chassis.

  You should take inventory of the drives along with the rest of the system equipment you received.

- After you unpack the drives, you should save the packaging materials for future use.

  Possible loss of data access: If in the future, you move the shelf to a different part of the data center or transport the shelf to a different location, you need to remove the drives from the drive drawers to avoid possible damage to the drive drawers and drives.

  Keep disk drives in their ESD bag until you are ready to install them.

- When handling the drives, always wear an ESD wrist strap grounded to an unpainted surface on your storage enclosure chassis to prevent static discharges.

  If a wrist strap is unavailable, touch an unpainted surface on your storage enclosure chassis before handling the disk drive.

Install disk shelves with IOM12/IOM12B modules for a new system installation

You install the disk shelves in a rack using the rack mount kits that came with the disk shelves.

1. Install the rack mount kit (for two-post or four-post rack installations) that came with your disk shelf using the installation flyer that came with the kit.

   If you are installing multiple disk shelves, you should install them from the bottom to the top of the rack for the best stability.

   Do not flange-mount the disk shelf into a telco-type rack; the disk shelf's weight can cause it to collapse in the rack under its own weight.

2. Install and secure the disk shelf onto the support brackets and rack using the installation flyer that came with the kit.

   To make a disk shelf lighter and easier to maneuver, remove the power supplies and I/O modules (IOMs).

   For DS460C disk shelves, although the drives are packaged separately, which makes the shelf lighter, an empty DS460C shelf still weighs approximately 132 lb (60kg); therefore, exercise the following caution when moving a shelf.

   It is recommended that you use a mechanized lift or four people using the lift handles to safely move an empty DS460C shelf.

   Your DS460C shipment was packaged with four detachable lift handles (two for each side). To use the lift handles, you install them by inserting the tabs of the handles into the slots in the side of the shelf and pushing up until they click into place. Then, as you slide the disk shelf onto the rails, you detach one set of handles at a time using the thumb latch. The following illustration shows how to attach a lift handle.

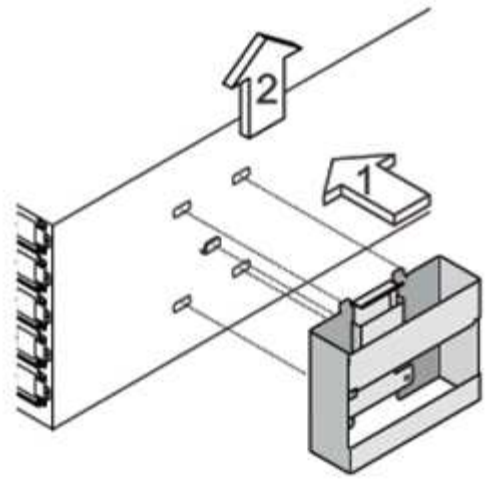

3. Reinstall any power supplies and IOMs you removed prior to installing your disk shelf into the rack.
4. If you are installing a DS460C disk shelf, install the drives into the drive drawers; otherwise, go to the next step.

> Always wear an ESD wrist strap grounded to an unpainted surface on your storage enclosure chassis to prevent static discharges.
>
> If a wrist strap is unavailable, touch an unpainted surface on your storage enclosure chassis before handling the disk drive.

If you purchased a partially populated shelf, meaning that the shelf has less than the 60 drives it supports, for each drawer, install the drives as follows:

- Install the first four drives into the front slots (0, 3, 6, and 9).

  > **Risk of equipment malfunction:** To allow for proper air flow and prevent overheating, always install the first four drives into the front slots (0, 3, 6, and 9).

- For the remaining drives, evenly distribute them across each drawer.

  The following illustration shows how the drives are numbered from 0 to 11 in each drive drawer within the shelf.

a. Open the top drawer of the shelf.

b. Remove a drive from its ESD bag.

c. Raise the cam handle on the drive to vertical.

d. Align the two raised buttons on each side of the drive carrier with the matching gap in the drive channel on the drive drawer.

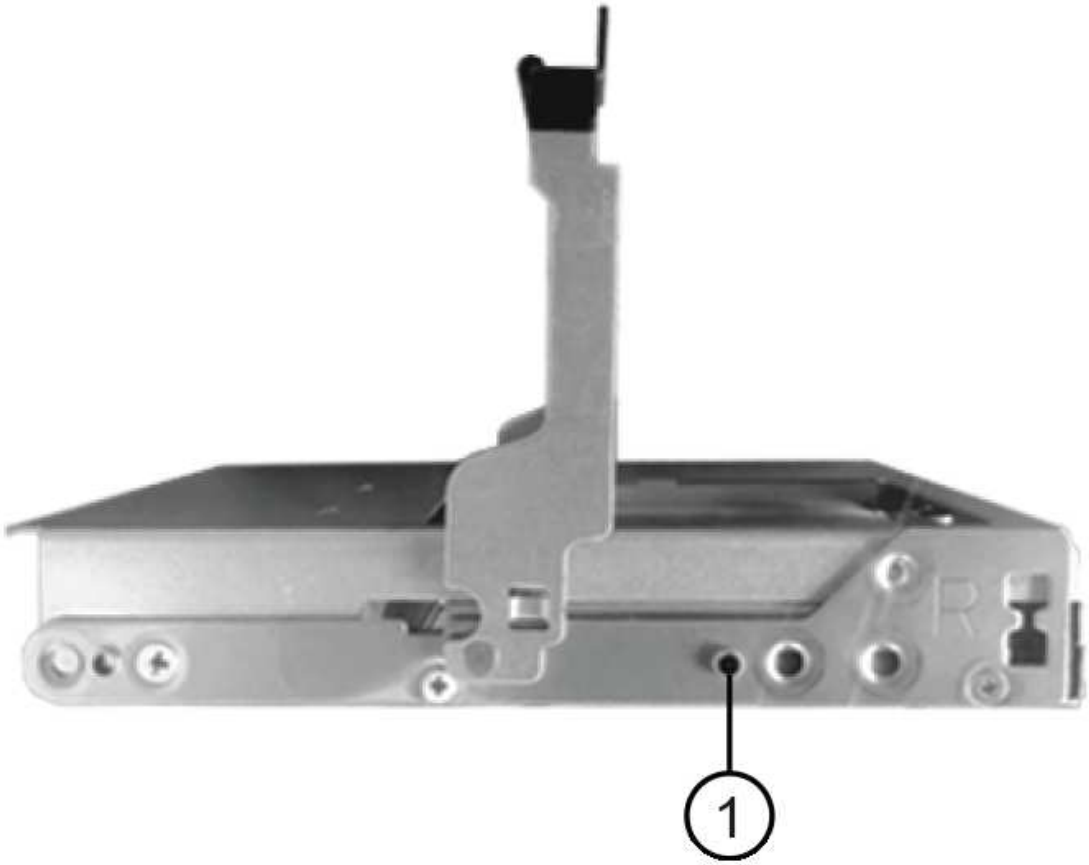

1	Raised button on the right side of the drive carrier

e. Lower the drive straight down, and then rotate the cam handle down until the drive snaps into place under the orange release latch.

f. Repeat the previous substeps for each drive in the drawer.

   You must be sure that slots 0, 3, 6, and 9 in each drawer contain drives.

g. Carefully push the drive drawer back into the enclosure.

Possible loss of data access: Never slam the drawer shut. Push the drawer in slowly to avoid jarring the drawer and causing damage to the storage array.

h. Close the drive drawer by pushing both levers towards the center.

i. Repeat these steps for each drawer in the disk shelf.

j. Attach the front bezel.

5. If you are adding multiple disk shelves, repeat this procedure for each disk shelf you are installing.

Do not power on the disk shelves at this time.

Cable disk shelves with IOM12/IOM12B modules for a new system installation

You cable disk shelf SAS connections—shelf-to-shelf (as applicable) and controller-to-shelf—to establish storage connectivity for the system.

Before you begin

You must have met the requirements in Requirements for installing and cabling disk shelves with IOM12/IOM12B modules for a new system installation and installed the disk shelves in the rack.

About this task

After you cable the disk shelves, you power them on, set the shelf IDs, and complete system setup and configuration.

Steps

1. Cable the shelf-to-shelf connections within each stack if the stack has more than one disk shelf; otherwise, go to the next step:

For a detailed explanation and examples of shelf-to-shelf “standard” cabling and shelf-to-shelf “double-wide” cabling, see shelf-to-shelf connection rules.

If…	Then…
You are cabling a multipath HA, tri-path HA, multipath, single-path HA, or single-path configuration	Cable the shelf-to-shelf connections as “standard” connectivity (using IOM ports 3 and 1): a. Beginning with the logical first shelf in the stack, connect IOM A port 3 to the next shelf’s IOM A port 1 until each IOM A in the stack is connected. b. Repeat substep a for IOM B. c. Repeat substeps a and b for each stack.
You are cabling a quad-path HA or quad-path configuration	Cable the shelf-to-shelf connections as “double-wide” connectivity: You cable the standard connectivity using IOM ports 3 and 1 and then the double-wide connectivity using IOM ports 4 and 2. a. Beginning with the logical first shelf in the stack, connect IOM A port 3 to the next shelf’s IOM A port 1 until each IOM A in the stack is connected. b. Beginning with the logical first shelf in the stack, connect IOM A port 4 to the next shelf’s IOM A port 2 until each IOM A in the stack is connected. c. Repeat substeps a and b for IOM B. d. Repeat substeps a through c for each stack.

2. Identify the controller SAS port pairs that you can use to cable the controller-to-stack connections.
   a. Check the controller-to-stack cabling worksheets and cabling examples to see whether a completed worksheet exists for your configuration.

      Controller-to-stack cabling worksheets and cabling examples for platforms with internal storage

      Controller-to-stack cabling worksheets and cabling examples for multipath HA configurations

      Controller-to-stack cabling worksheet and cabling example for a quad-path HA configuration with two quad-port SAS HBAs

   b. The next step depends on whether a completed worksheet exists for your configuration:

If…	Then…
There is a completed worksheet for your configuration	Go to the next step. You use the existing completed worksheet.

If…	Then…
There is no completed worksheet for your configuration	Fill out the appropriate controller-to-stack cabling worksheet template: Controller-to-stack cabling worksheet template for multipathed connectivity Controller-to-stack cabling worksheet template for quad-pathed connectivity

3. Cable the controller-to-stack connections using the completed worksheet.

   If needed, instructions for how to read a worksheet to cable controller-to-stack connections are available:

   How to read a worksheet to cable controller-to-stack connections for multipathed connectivity

   How to read a worksheet to cable controller-to-stack connections for quad-pathed connectivity

4. Connect the power supplies for each disk shelf:
   a. Connect the power cords first to the disk shelves, securing them in place with the power cord retainer, and then connect the power cords to different power sources for resiliency.
   b. Turn on the power supplies for each disk shelf and wait for the disk drives to spin up.
5. Set the shelf IDs and complete system setup:

   You must set shelf IDs so they are unique within the HA pair or single-controller configuration, including the internal disk shelf in applicable systems.

If…	Then…
You are manually setting shelf IDs	a. Access the shelf ID button behind the left end cap. b. Change the shelf ID to a unique ID (00 through 99). c. Power-cycle the disk shelf to make the shelf ID take effect. Wait at least 10 seconds before turning the power back on to complete the power cycle. The shelf ID blinks and the operator display panel amber LED blinks until you power cycle the disk shelf. d. Power on the controllers and complete system setup and configuration as instructed by the installation and setup instructions for your platform model.

If…	Then…
You are automatically assigning all shelf IDs in your HA pair or single-controller configuration Shelf IDs are assigned in sequential order from 00-99. For systems with an internal disk shelf, shelf ID assignment begins with the internal disk shelf.	a. Power on the controllers. b. As the controllers start booting, press `Ctrl-C` to abort the AUTOBOOT process when you see the message `Starting AUTOBOOT press Ctrl-C to abort`. If you miss the prompt and the controllers boot to ONTAP, halt both controllers, and then boot both controllers to the boot menu by entering `boot_ontap menu` at their LOADER prompt. c. Boot one controller to Maintenance mode:`boot_ontap menu` You only need to assign shelf IDs on one controller. d. From the boot menu, select option 5 for Maintenance mode. e. Automatically assign shelf IDs: `sasadmin expander_set_shelf_id -a` f. Exit Maintenance mode:`halt` g. Bring up the system by entering the following command at the LOADER prompt of both controllers:`boot_ontap` Shelf IDs appear in disk shelf digital display windows. Before you boot the system, best practice is to take this opportunity to verify cabling is correct and a root aggregate is present.. h. Complete system setup and configuration as instructed by the installation and setup instructions for your platform model.

6. If as part of system set up and configuration, you did not enable disk ownership automatic assignment, manually assign disk ownership; otherwise, go to the next step:
   a. Display all unowned disks:`storage disk show -container-type unassigned`
   b. Assign each disk:`storage disk assign -disk` *`disk_name`* `-owner` *`owner_name`*

      You can use the wildcard character to assign more than one disk at once.

7. Download and run Config Advisor as instructed by the installation and setup instructions for your platform model to verify SAS connections are cabled correctly and there are no duplicate shelf IDs within the system.

   If any SAS cabling or duplicate shelf ID errors are generated, follow the corrective actions provided.

   NetApp Downloads: Config Advisor

   You can also run the `storage shelf show -fields shelf-id` command to see a list of shelf IDs already in use (and duplicates if present) in your system.

8. Verify that in-band ACP was automatically enabled. `storage shelf acp show`

   In the output, “in-band” is listed as “active” for each node.

Move or transport DS460C shelves

If in the future, you move DS460C shelves to a different part of the data center or transport the shelves to a different location, you need to remove the drives from the drive drawers to avoid possible damage to the drive drawers and drives.

- If when you installed DS460C shelves as part of your new system installation, you saved the drive packaging materials, use these to repackage the drives before moving them.

  If you did not save the packaging materials, you should place drives on cushioned surfaces or use alternate cushioned packaging. Never stack drives on top of each other.

- Before handling drives, wear an ESD wrist strap grounded to an unpainted surface on your storage enclosure chassis.

  If a wrist strap is unavailable, touch an unpainted surface on your storage enclosure chassis before handling a drive.

- You should take steps to handle drives carefully:
  - Always use two hands when removing, installing, or carrying a drive to support its weight.

    Do not place hands on the drive boards exposed on the underside of the drive carrier.

  - Be careful not to bump drives against other surfaces.
  - Drives should be kept away from magnetic devices.

    Magnetic fields can destroy all data on a drive and cause irreparable damage to the drive circuitry.

Hot-add a shelf - shelves with IOM12/IOM12B modules

You can hot-add one or more disk shelves with IOM12/IOM12B modules to an existing stack of disk shelves with IOM12/IOM12B modules or hot-add a stack of one or more disk shelves with IOM12/IOM12B modules directly to a SAS HBA or an onboard SAS port on the controller.

About this task

You cannot use this procedure to mix a stack: hot-add a shelf with IOM12/IOM12B modules to a stack of shelves that has IOM6 modules. If you need to mix a stack, use Hot-add IOM12 shelves to a stack of IOM6 shelves.

Requirements for hot-adding disk shelves with IOM12/IOM12B modules

Your system must meet certain requirements before hot-adding disk shelves with IOM12/IOM12B modules.

State of your system

- Your system and version of ONTAP must support the disk shelves you are hot-adding, including the IOMs, disk drives, and SAS cables.

  NetApp Hardware Universe

- Your system must have less than the maximum number of disk drives supported, by at least the number of disk shelves you plan to hot-add.

  You cannot have exceeded the maximum number of disk drives supported for your system after hot-adding disk shelves.

  NetApp Hardware Universe

- If you are hot-adding a stack of one or more disk shelves (directly to the platform controllers), your system must have enough available PCI SAS HBA or onboard SAS ports or a combination of both.

  > If you need to install an additional PCI SAS HBA, the best practice is to use 12Gb SAS HBAs to keep controller-to-stack connectivity at 12Gbs for maximum performance.
  >
  > Using 6Gb SAS HBAs or a combination of 6Gb SAS HBAs and 12Gb SAS HBAs is supported; however, IOM12 module connections to 6Gb SAS HBAs are negotiated down to 6Gbs, resulting in lower performance.

- Your system cannot have any SAS cabling error messages.

  Download and run Config Advisor to verify that your SAS connections are cabled correctly.

  You must correct any cabling errors using the corrective actions provided by the error messages.

  NetApp Downloads: Config Advisor

Using mini-SAS HD SAS optical cables

- If you are using mini-SAS HD SAS optical cables or a mix of mini-SAS HD SAS optical cables and SAS copper cables in the stack of disk shelves, you must have met the rules in Mini-SAS HD SAS optical cable rules.
- If you are hot-adding a disk shelf with mini-SAS HD SAS optical cables to a stack of disk shelves that is connected with SAS copper cables, you can temporarily have both cable types in the stack.

  After hot-adding the disk shelf, you must replace the SAS copper cables for the rest of the shelf-to-shelf connections in the stack and the controller-to-stack connections so that the stack meets the rules in Mini-SAS HD SAS optical cable rules. This means that you must have ordered the appropriate number of mini-SAS HD SAS optical cables.

Considerations for hot-adding disk shelves with IOM12/IOM12B modules

You should familiarize yourself with aspects and best practices about this procedure before hot-adding disk shelves.

General considerations

- If you are hot-adding a disk shelf with IOM12/IOM12B modules to an existing stack (of disk shelves with IOM12/IOM12B modules), you can hot-add the disk shelf to either end—the logical first or last disk shelf—of the stack.

  For single-path HA and single-path configurations, as applicable to AFF A200, AFF A220, FAS2600 series, and FAS2700 systems, you hot-add disk shelves to the end of the stack that does not have controller connections.

- Disk shelves with IOM12/IOM12B modules must be in their own unique stack; they cannot be added to a stack that has shelves with IOM6 modules or IOM3 modules.
- This procedure assumes your configuration is using in-band ACP.

  For configurations that have in-band ACP enabled, in-band ACP is automatically enabled on hot-added disk shelves. For configurations in which in-band ACP is not enabled, hot-added disk shelves operate without any ACP functionality.

- Nondisruptive stack consolidation is not supported.

  You cannot use this procedure to hot-add disk shelves that were hot-removed from another stack in the same system when the system is powered on and serving data (I/O is in progress).

Best practice considerations

- The best practice is to have the current version of the Disk Qualification Package (DQP) installed before hot-adding a disk shelf.

  Having the current version of the DQP installed allows your system to recognize and utilize newly qualified disk drives; therefore, avoiding system event messages about having non-current disk drive information. You also avoid the possible prevention of disk partitioning because disk drives are not recognized. The DQP also notifies you of non-current disk drive firmware.

  NetApp Downloads: Disk Qualification Package

- The best practice is to run Config Advisor before and after hot-adding a disk shelf.

  Running Config Advisor before hot-adding a disk shelf provides a snapshot of the SAS connectivity, verifies disk shelf (IOM) firmware versions, and allows you to verify shelf IDs already in use on your system. Running Config Advisor after hot-adding a disk shelf allows you to verify SAS connections are cabled correctly and that shelf IDs are unique within the HA pair or single-controller configuration.

  If any SAS cabling or duplicate shelf ID errors are generated, follow the corrective actions provided.

  You need network access to download Config Advisor.

  NetApp Downloads: Config Advisor

- The best practice is to have the current versions of disk shelf (IOM) firmware and disk drive firmware on your system before adding new disk shelves, shelf FRU components, or SAS cables.

Current versions of firmware can be found on the NetApp Support Site.

NetApp Downloads: Disk Shelf Firmware

NetApp Downloads: Disk Drive Firmware

SAS cable handling considerations

- Visually inspect the SAS port to verify the proper orientation of the connector before plugging it in.

  The SAS cable connectors are keyed. When oriented correctly into a SAS port, the connector clicks into place and if the disk shelf power is on at the time, the disk shelf SAS port LNK LED illuminates green. For disk shelves, you insert a SAS cable connector with the pull tab oriented down (on the underside of the connector).

  For controllers, the orientation of SAS ports can vary depending on the platform model; therefore, the correct orientation of the SAS cable connector varies.

- To prevent degraded performance, do not twist, fold, pinch, or step on the cables.

  Cables have a minimum bend radius. Cable manufacturer specifications define the minimum bend radius; however, a general guideline for minimum bend radius is 10 times the cable diameter.

- Using Velcro wraps instead of tie-wraps to bundle and secure system cables allows for easier cable adjustments.

DS460C drive handling considerations

- The drives are packaged separately from the shelf chassis.

  You should take inventory of the drives.

- After you unpack the drives, you should save the packaging materials for future use.

  Possible loss of data access: If in the future, you move the shelf to a different part of the data center or transport the shelf to a different location, you need to remove the drives from the drive drawers to avoid possible damage to the drive drawers and drives.

  Keep disk drives in their ESD bag until you are ready to install them.

- When handling the drives, always wear an ESD wrist strap grounded to an unpainted surface on your storage enclosure chassis to prevent static discharges.

  If a wrist strap is unavailable, touch an unpainted surface on your storage enclosure chassis before handling the disk drive.

Install disk shelves with IOM12/IOM12B modules for a hot-add

For each disk shelf you are hot-adding, you install the disk shelf into a rack, connect the power cords, power on the disk shelf, and set the disk shelf ID before cabling the SAS connections.

Steps

1. Install the rack mount kit (for two-post or four-post rack installations) that came with your disk shelf using

the installation flyer that came with the kit.

> If you are installing multiple disk shelves, you should install them from the bottom to the top of the rack for the best stability.

> Do not flange-mount the disk shelf into a telco-type rack; the disk shelf's weight can cause it to collapse in the rack under its own weight.

2. Install and secure the disk shelf onto the support brackets and rack using the installation flyer that came with the kit.

   To make a disk shelf lighter and easier to maneuver, remove the power supplies and I/O modules (IOMs).

   For DS460C disk shelves, although the drives are packaged separately, which makes the shelf lighter, an empty DS460C shelf still weighs approximately 132 lb (60kg); therefore, exercise the following caution when moving a shelf.

   > It is recommended that you use a mechanized lift or four people using the lift handles to safely move an empty DS460C shelf.

   Your DS460C shipment was packaged with four detachable lift handles (two for each side). To use the lift handles, you install them by inserting the tabs of the handles into the slots in the side of the shelf and pushing up until they click into place. Then, as you slide the disk shelf onto the rails, you detach one set of handles at a time using the thumb latch. The following illustration shows how to attach a lift handle.

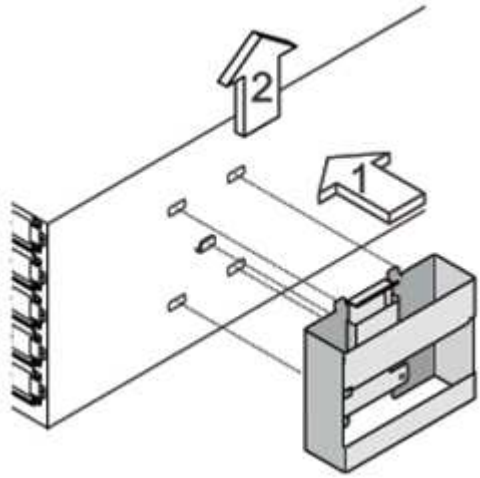

3. Reinstall any power supplies and IOMs you removed prior to installing your disk shelf into the rack.
4. If you are installing a DS460C disk shelf, install the drives into the drive drawers; otherwise, go to the next step.

   > Always wear an ESD wrist strap grounded to an unpainted surface on your storage enclosure chassis to prevent static discharges.
   >
   > If a wrist strap is unavailable, touch an unpainted surface on your storage enclosure chassis before handling the disk drive.

   If you purchased a partially populated shelf, meaning that the shelf has less than the 60 drives it supports, for each drawer, install the drives as follows:

- Install the first four drives into the front slots (0, 3, 6, and 9).

> **Risk of equipment malfunction:** To allow for proper air flow and prevent overheating, always install the first four drives into the front slots (0, 3, 6, and 9).

- For the remaining drives, evenly distribute them across each drawer.

  The following illustration shows how the drives are numbered from 0 to 11 in each drive drawer within the shelf.

  a. Open the top drawer of the shelf.
  b. Remove a drive from its ESD bag.
  c. Raise the cam handle on the drive to vertical.
  d. Align the two raised buttons on each side of the drive carrier with the matching gap in the drive channel on the drive drawer.

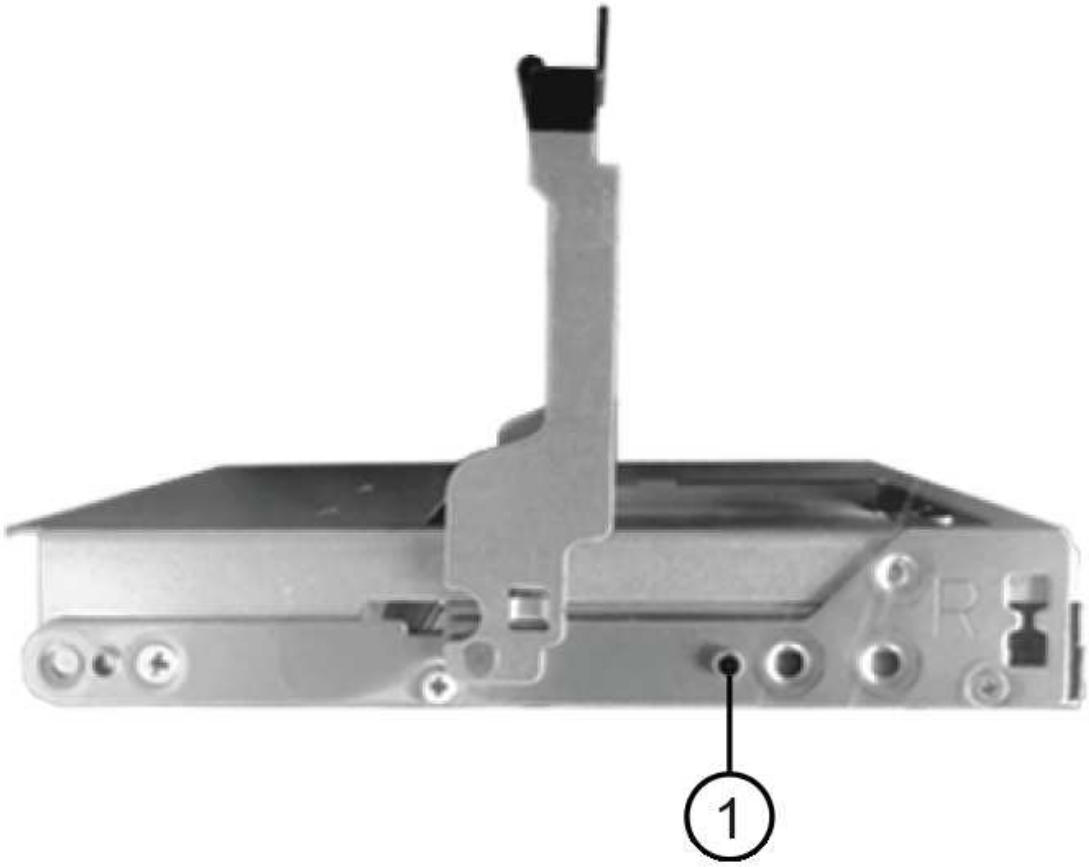

1	Raised button on the right side of the drive carrier

e. Lower the drive straight down, and then rotate the cam handle down until the drive snaps into place under the orange release latch.

f. Repeat the previous substeps for each drive in the drawer.

   You must be sure that slots 0, 3, 6, and 9 in each drawer contain drives.

g. Carefully push the drive drawer back into the enclosure.

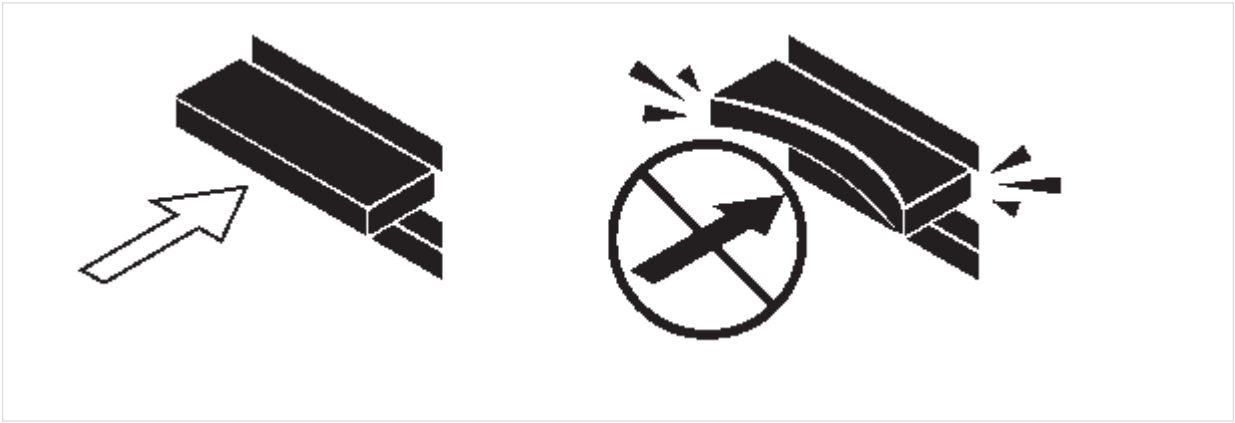

> **Possible loss of data access:** Never slam the drawer shut. Push the drawer in slowly to avoid jarring the drawer and causing damage to the storage array.

   h. Close the drive drawer by pushing both levers towards the center.
   i. Repeat these steps for each drawer in the disk shelf.
   j. Attach the front bezel.

5. If you are adding multiple disk shelves, repeat the previous steps for each disk shelf you are installing.
6. Connect the power supplies for each disk shelf:
   a. Connect the power cords first to the disk shelves, securing them in place with the power cord retainer, and then connect the power cords to different power sources for resiliency.
   b. Turn on the power supplies for each disk shelf and wait for the disk drives to spin up.
7. Set the shelf ID for each disk shelf you are hot-adding to an ID that is unique within the HA pair or single-controller configuration.

   If you have a platform model with an internal disk shelf, shelf IDs must be unique across the internal disk shelf and externally attached disk shelves.

   You can use the following substeps to change shelf IDs, or for more detailed instructions, use Change a shelf ID.

   a. If needed, verify shelf IDs already in use by running Config Advisor.

      You can also run the `storage shelf show -fields shelf-id` command to see a list of shelf IDs already in use (and duplicates if present) in your system.

   b. Access the shelf ID button behind the left end cap.
   c. Change the shelf ID to a valid ID (00 through 99).
   d. Power-cycle the disk shelf to make the shelf ID take effect.

      Wait at least 10 seconds before turning the power back on to complete the power cycle.

      The shelf ID blinks and the operator display panel amber LED blinks until you power cycle the disk shelf.

   e. Repeat substeps a through d for each disk shelf you are hot-adding.

Cable disk shelves with IOM12/IOM12B modules for a hot-add

You cable the SAS connections (shelf-to-shelf and controller-to-stack) as applicable for hot-added disk shelves so they have connectivity to the system.

Before you begin

You must have met the requirements in Requirements for hot-adding disk shelves with IOM12 modules and installed, powered on, and set shelf IDs for each disk shelf as instructed in Install disk shelves with IOM12 modules for a hot-add.

About this task

- For an explanation and examples of shelf-to-shelf “standard” cabling and shelf-to-shelf “double-wide”

cabling, see Shelf-to-shelf SAS connection rules.

- For instructions about how to read a worksheet to cable controller-to-stack connections, see How to read a worksheet to cable controller-to-stack connections for multipathed connectivity or How to read a worksheet to cable controller-to-stack connections for quad-pathed connectivity.
- After you have cabled the hot-added disk shelves, ONTAP recognizes them: disk ownership is assigned if disk ownership automatic assignment is enabled; disk shelf (IOM) firmware and disk drive firmware should automatically update if needed; and if in-band ACP is enabled on your configuration, it is automatically enabled on the hot-added disk shelves.

> Firmware updates can take up to 30 minutes.

Steps

1. If you want to manually assign disk ownership for the disk shelves you are hot-adding, you need to disable disk ownership automatic assignment if it is enabled; otherwise, go to the next step.

   You need to manually assign disk ownership if disks in the stack are owned by both controllers in an HA pair.

   You disable disk ownership automatic assignment before cabling the hot-added disk shelves and then later, in step 7, you reenable it after cabling the hot-added disk shelves.

   a. Verify if disk ownership automatic assignment is enabled:`storage disk option show`

      If you have an HA pair, you can enter the command at the console of either controller.

      If disk ownership automatic assignment is enabled, the output shows “on” (for each controller) in the “Auto Assign” column.

   b. If disk ownership automatic assignment is enabled, you need to disable it:`storage disk option modify -node _node_nam_e -autoassign off`

      You need to disable disk ownership automatic assignment on both controllers in an HA pair.

2. If you are hot-adding a stack of disk shelves directly to a controller, complete the following substeps; otherwise, go to step 3.

   a. If the stack you are hot-adding has more than one disk shelf, cable the shelf-to-shelf connections; otherwise, go to substep b.

If…	Then…
You are cabling a stack with multipath HA, tri-path HA, multipath, single-path HA, or single-path connectivity to the controllers	Cable the shelf-to-shelf connections as “standard” connectivity (using IOM ports 3 and 1): i. Beginning with the logical first shelf in the stack, connect IOM A port 3 to the next shelf’s IOM A port 1 until each IOM A in the stack is connected. ii. Repeat substep i for IOM B.

If…	Then…
You are cabling a stack with quad-path HA or quad-path connectivity to the controllers	Cable the shelf-to-shelf connections as “double-wide” connectivity: You cable the standard connectivity using IOM ports 3 and 1 and then the double-wide connectivity using IOM ports 4 and 2. i. Beginning with the logical first shelf in the stack, connect IOM A port 3 to the next shelf’s IOM A port 1 until each IOM A in the stack is connected. ii. Beginning with the logical first shelf in the stack, connect IOM A port 4 to the next shelf’s IOM A port 2 until each IOM A in the stack is connected. iii. Repeat substeps i and ii for IOM B.

b. Check the controller-to-stack cabling worksheets and cabling examples to see whether a completed worksheet exists for your configuration.

   Controller-to-stack cabling worksheets and cabling examples for platforms with internal storage

   Controller-to-stack cabling worksheets and cabling examples for multipath HA configurations

   Controller-to-stack cabling worksheet and cabling example for a quad-path HA configuration with two quad-port SAS HBAs

c. If there is a completed worksheet for your configuration, cable the controller-to-stack connections using the completed worksheet; otherwise, go to the next substep.

d. If there is no completed worksheet for your configuration, fill out the appropriate worksheet template, and then cable the controller-to-stack connections using the completed worksheet.

   Controller-to-stack cabling worksheet template for multipathed connectivity

   Controller-to-stack cabling worksheet template for quad-pathed connectivity

e. Verify that all cables are securely fastened.

3. If you are hot-adding one or more disk shelves to an end (the logical first or last disk shelf) of an existing stack, complete the applicable substeps for your configuration; otherwise, go to the next step.

   Make sure that you wait at least 70 seconds between disconnecting a cable and reconnecting it, and if you are replacing a cable for a longer one.

If you are…	Then…
Hot-adding a disk shelf to an end of a stack that has multipath HA, tri-path HA, multipath, quad-path HA, or quad-path connectivity to the controllers	a. Disconnect any cables from IOM A of the disk shelf at the end of the stack that are connected to any controllers; otherwise, go to substep e. Leave the other end of these cables connected to the controllers, or replace cables with longer cables if needed. b. Cable the shelf-to-shelf connection(s) between IOM A of the disk shelf at the end of the stack and IOM A of the disk shelf you are hot-adding. c. Reconnect any cables that you removed in substep a to the same port(s) on IOM A of the disk shelf you are hot-adding; otherwise, go to the next substep. d. Verify that all cables are securely fastened. e. Repeat substeps a through d for IOM B; otherwise, go to Step 4.
Hot-adding a disk shelf to an end of the stack in a single-path HA or single-path configuration, as applicable to AFF A200, AFF A220, FAS2600 series and FAS2700 systems. These instructions are for hot-adding to the end of the stack that does not have controller-to-stack connections.	a. Cable the shelf-to-shelf connection between IOM A of the disk shelf in the stack and IOM A of the disk shelf you are hot-adding. b. Verify that the cable is securely fastened. c. Repeat applicable substeps for IOM B.

4. If you hot-added a disk shelf with mini-SAS HD SAS optical cables to a stack of disk shelves connected with SAS copper cables, replace the SAS copper cables; otherwise, go to the next step.

   The stack must meet the requirements stated in the Requirements for hot-adding disk shelves with IOM12/IOM12B modules section of this procedure.

   Replace cables one at a time and make sure that you wait at least 70 seconds between disconnecting a cable and connecting a new one.

5. Download and run Config Advisor to verify that your SAS connections are cabled correctly.

   NetApp Downloads: Config Advisor

   If any SAS cabling errors are generated, follow the corrective actions provided.

6. Verify SAS connectivity for each hot-added disk shelf: `storage shelf show -shelf` *`shelf_name`* `-connectivity`

   You must run this command for each disk shelf you hot-added.

   For example, the following output shows hot-added disk shelf 2.5 is connected to initiator ports 1a and 0d (port pair 1a/0d) on each controller (in a FAS8080 multipath HA configuration with one quad-port SAS

HBA):

```
cluster1::> storage shelf show -shelf 2.5 -connectivity

           Shelf Name: 2.5
             Stack ID: 2
             Shelf ID: 5
            Shelf UID: 40:0a:09:70:02:2a:2b
        Serial Number: 101033373
          Module Type: IOM12
                Model: DS224C
         Shelf Vendor: NETAPP
           Disk Count: 24
      Connection Type: SAS
          Shelf State: Online
               Status: Normal

Paths:

Controller     Initiator   Initiator Side Switch Port   Target Side
Switch Port   Target Port   TPGN
------------   ---------   --------------------------
-----------------------   -----------   ------
stor-8080-1    1a           -                           -
-             -
stor-8080-1    0d           -                           -
-             -
stor-8080-2    1a           -                           -
-             -
stor-8080-2    0d           -                           -
-             -

Errors:
------
-
```

7. If you disabled disk ownership automatic assignment in Step 1, manually assign disk ownership, and then reenable disk ownership automatic assignment if needed:
   a. Display all unowned disks:`storage disk show -container-type unassigned`
   b. Assign each disk:`storage disk assign -disk` *`disk_name`* `-owner` *`owner_name`*

      You can use the wildcard character to assign more than one disk at once.

   c. Reenable disk ownership automatic assignment if needed:`storage disk option modify -node` *`node_name`* `-autoassign on`

You need to reenable disk ownership automatic assignment on both controllers in an HA pair.

8. If your configuration is running in-band ACP, verify that in-band ACP was automatically enabled on hot-added disk shelves: `storage shelf acp show`

   In the output, “in-band” is listed as “active” for each node.

Move or transport DS460C shelves

If in the future, you move DS460C shelves to a different part of the data center or transport the shelves to a different location, you need to remove the drives from the drive drawers to avoid possible damage to the drive drawers and drives.

- If when you installed DS460C shelves as part of your shelf hot-add, you saved the drive packaging materials, use these to repackage the drives before moving them.

  If you did not save the packaging materials, you should place drives on cushioned surfaces or use alternate cushioned packaging. Never stack drives on top of each other.

- Before handling drives, wear an ESD wrist strap grounded to an unpainted surface on your storage enclosure chassis.

  If a wrist strap is unavailable, touch an unpainted surface on your storage enclosure chassis before handling a drive.

- You should take steps to handle drives carefully:
  - Always use two hands when removing, installing, or carrying a drive to support its weight.

    Do not place hands on the drive boards exposed on the underside of the drive carrier.

  - Be careful not to bump drives against other surfaces.
  - Drives should be kept away from magnetic devices.

    Magnetic fields can destroy all data on a drive and cause irreparable damage to the drive circuitry.

Hot-add IOM12/IOM12B shelves to a stack of IOM6 shelves

When additional storage is needed, you can hot-add IOM12/IOM12B shelves (SAS shelves with IOM12/IOM12B modules) to a stack of IOM6 shelves (SAS shelves with IOM6 modules), meaning you can mix a stack.

Requirements for a hot-add

Your HA pair, single-controller or stretch MetroCluster configuration (system) must meet certain requirements before hot-adding IOM12/IOM12B shelves to a stack of IOM6 shelves.

For bridge-attached MetroCluster configurations, see Requirements for a hot-add in bridge-attached MetroCluster configurations.

- Your system and version of ONTAP must support a mix of IOM6 shelves and IOM12/IOM12B shelves in the same stack (a mixed stack).

  You can verify support by using one of the following methods:

  - Enter the `run local sysconfig` command, at the admin prompt of either controller.

    If the SAS2/SAS3 Mixed Stack Support field does not appear in the output or has a value of "none", then your system does not support mixed stacks.

    If "all" appears in the SAS2/SAS3 Mixed Stack Support field, then your system supports mixed stacks.

    If "bridge-attached" appears in the SAS2/SAS3 Mixed Stack Support field, then your system supports mixed stacks only if the storage shelves are connected through an ATTO FibreBridge.

  - Go to Hardware Universe and navigate to your platform information.

    NetApp Hardware Universe

- If you are adding a shelf to a MetroCluster configuration, the configuration must meet all requirements in the MetroCluster Installation and Configuration Guides.

  MetroCluster IP Installation and Configuration Guide

  ONTAP 9 Stretch MetroCluster Installation and Configuration Guide

  ONTAP 9 Fabric-attached MetroCluster Installation and Configuration Guide

- The stack of IOM6 shelves, to which you are hot-adding an IOM12/IOM12B shelf, must be cabled with SAS copper cables (for all shelf-to-shelf and controller-to-stack connections).

  SAS optical cables are not supported in a mixed stack.

  > If the IOM6 shelf stack is cabled with any SAS optical cables, you cannot hot-add an IOM12/IOM12B shelf. Contact your NetApp sales representative.

- Your system must have less than the maximum number of drives supported, by at least the number of drives capable of being installed in the IOM12/IOM12B shelves you are hot-adding.

  You cannot have exceeded the maximum number of drives supported for your system after hot-adding IOM12/IOM12B shelves.

  NetApp Hardware Universe

- Your system cannot have any SAS cabling error messages.

  You must correct any cabling errors using the corrective actions provided by the error messages.

  NetApp Downloads: Config Advisor

- You must have ordered and received the IOM12/IOM12B shelves and appropriate number and types of SAS copper cables.

  IOM12/IOM12B shelves use mini-SAS HD connectors. IOM6 shelves use QSFP connectors.

Requirements for a hot-add in bridge-attached MetroCluster configurations

If you are hot-adding IOM12/IOM12B shelves to a stack of IOM6 shelves that is attached using a pair of ATTO FibreBridge bridges in a MetroCluster configuration, the system must meet certain requirements.

- If bridge SAS ports are available in the current configuration, you should add the IOM12/IOM12B shelves as a separate stack.

  Use all bridge ports before mixing IOM12/IOM12B and IOM6 modules in a stack.

- Your system and version of ONTAP must support a mix of IOM6 shelves and IOM12/IOM12B shelves in the same stack (a mixed stack).

  You can verify support by using one of the following methods:

  - Enter the `run local sysconfig` command at the admin prompt of either controller.

    If the SAS2/SAS3 Mixed Stack Support field does not appear in the output or has a value of none, then your system does not support mixed stacks.

    If anything else appears in the SAS2/SAS3 Mixed Stack Support field, such as all or bridge-attached, then your system does support mixed stacks.

  - Go to Hardware Universe and navigate to your platform information.

    NetApp Hardware Universe

- The configuration must meet all requirements in the MetroCluster Installation and Configuration Guides.

  Installing and Configuring a Stretch MetroCluster Configuration

  Installing and Configuring a fabric-attached MetroCluster Configuration

- The stack of IOM6 shelves, to which you are hot-adding an IOM12/IOM12B shelf, must be cabled with SAS copper cables (for all shelf-to-shelf and controller-to-stack connections).

  SAS optical cables are not supported in a mixed stack.

  > If the IOM6 shelf stack is cabled with any SAS optical cables, you cannot hot-add an IOM12/IOM12B shelf. Contact your NetApp sales representative.

- Your configuration must have less than the maximum number of drives supported for a bridge port.
- You must have ordered and received the IOM12/IOM12B shelves and appropriate number and types of SAS copper cables.

  IOM12/IOM12B shelves use mini-SAS HD connectors. IOM6 shelves use QSFP connectors.

- The bridge must be running firmware version 3.16/4.16 and later.

Considerations for a hot-add

You should familiarize yourself with aspects and best practices about this procedure before hot-adding IOM12/IOM12B shelves to a stack of IOM6 shelves.

General considerations

- It is highly recommended that the IOM12/IOM12B shelves you are hot-adding are running firmware version 0260 or later, before you cable them to your system.

  Having a supported version of shelf firmware protects against storage stack access issues if you cabled the hot-added shelf to the stack incorrectly.

  After you download the IOM12/IOM12B shelf firmware to your shelves, verify the firmware version is 0260 or later by entering the `storage shelf show -module` command at the console of either controller.

- Nondisruptive stack consolidation is not supported.

  You cannot use this procedure to hot-add disk shelves that were hot-removed from another stack in the same system when the system is powered on and serving data (I/O is in progress).

- You can use this procedure to hot-add disk shelves that were hot-removed within the same MetroCluster system if the affected shelf has mirrored aggregates.
- When you hot-add shelves with IOM12/IOM12B modules to a stack of shelves with IOM6 modules, the performance of the entire stack operates at 6 Gbps (runs at the lowest common speed).

  If the shelves you are hot-adding are shelves that have been upgraded from IOM3 or IOM6 modules to IOM12/IOM12B modules, the stack operates at 12 Gbps; however, the shelf backplane and disk capabilities can limit disk performance to 3 Gbps or 6 Gbps.

- After you have cabled a hot-added shelf, ONTAP recognizes the shelf:
  - Drive ownership is assigned if automatic drive assignment is enabled.
  - Shelf (IOM) firmware and drive firmware should be updated automatically, if needed.

    Firmware updates can take up to 30 minutes.

Best practice considerations

- **Best practice:** The best practice is to have current versions of shelf (IOM) firmware and drive firmware on your system before hot-adding a shelf.

  NetApp Downloads: Disk Shelf Firmware

  NetApp Downloads: Disk Drive Firmware

  Do not revert firmware to a version that does not support your shelf and its components.

- **Best practice:** The best practice is to have the current version of the Disk Qualification Package (DQP) installed before hot-adding a shelf.

  Having the current version of the DQP installed allows your system to recognize and use newly qualified drives. This avoids system event messages about having noncurrent drive information and prevention of drive partitioning because drives are not recognized. The DQP also notifies you of noncurrent drive firmware.

  NetApp Downloads: Disk Qualification Package

- **Best practice:** The best practice is to run Active IQ Config Advisor before and after hot-adding a shelf.

  Running Active IQ Config Advisor before hot-adding a shelf provides a snapshot of the existing SAS connectivity, verifies shelf (IOM) firmware versions, and allows you to verify a shelf ID already in use on your system. Running Active IQ Config Advisor after hot-adding a shelf allows you to verify shelves are cabled correctly and that shelf IDs are unique within your system.

  NetApp Downloads: Config Advisor

- **Best practice:** The best practice is to have in-band ACP (IBACP) running on your system.
  - For systems in which IBACP is running, IBACP is automatically enabled on hot-added IOM12/IOM12B shelves.
  - For systems in which out-of-band ACP is enabled, ACP capabilities are not available on IOM12/IOM12B shelves.

    You should migrate to IBACP and remove the out-of-band ACP cabling.

  - If your system is not running IBACP, and your system meets the requirements for IBACP, you can migrate your system to IBACP before hot-adding an IOM12 shelf.

    Instructions for migrating to IBACP

    The migration instructions provide the system requirements for IBACP.

Prepare to manually assign drive ownership for a hot-add

If you are manually assigning drive ownership for the IOM12/IOM12B shelves you are hot-adding, then you need to disable automatic drive assignment if it is enabled.

Before you begin

You must have met the system requirements.

Requirements for a hot-add

Requirements for a hot-add in bridge-attached MetroCluster configurations

About this task

If you have an HA pair, you need to manually assign drive ownership if drives in the shelf will be owned by both controller modules.

Steps

1. Verify whether automatic drive assignment is enabled: `storage disk option show`

   If you have an HA pair, you can enter the command on either controller module.

   If automatic drive assignment is enabled, the output shows `on` in the “Auto Assign” column (for each controller module).

2. If automatic drive assignment is enabled, disable it: `storage disk option modify -node` *`node_name`* `-autoassign off`

   If you have an HA pair or two-node MetroCluster configuration, you must disable automatic drive

assignment on both controller modules.

Install shelves for a hot-add

For each shelf you are hot-adding, you install the shelf into a rack, connect the power cords, power on the shelf, and set the shelf ID.

1. Install the rack mount kit (for two-post or four-post rack installations) that came with your disk shelf using the installation flyer that came with the kit.

   > If you are installing multiple disk shelves, you should install them from the bottom to the top of the rack for the best stability.

   > Do not flange-mount the disk shelf into a telco-type rack; the disk shelf's weight can cause it to collapse in the rack under its own weight.

2. Install and secure the disk shelf onto the support brackets and rack using the installation flyer that came with the kit.

   To make a disk shelf lighter and easier to maneuver, remove the power supplies and I/O modules (IOMs).

   For DS460C disk shelves, although the drives are packaged separately, which makes the shelf lighter, an empty DS460C shelf still weighs approximately 132 lb (60kg); therefore, exercise the following caution when moving a shelf.

   > It is recommended that you use a mechanized lift or four people using the lift handles to safely move an empty DS460C shelf.

   Your DS460C shipment was packaged with four detachable lift handles (two for each side). To use the lift handles, you install them by inserting the tabs of the handles into the slots in the side of the shelf and pushing up until they click into place. Then, as you slide the disk shelf onto the rails, you detach one set of handles at a time using the thumb latch. The following illustration shows how to attach a lift handle.

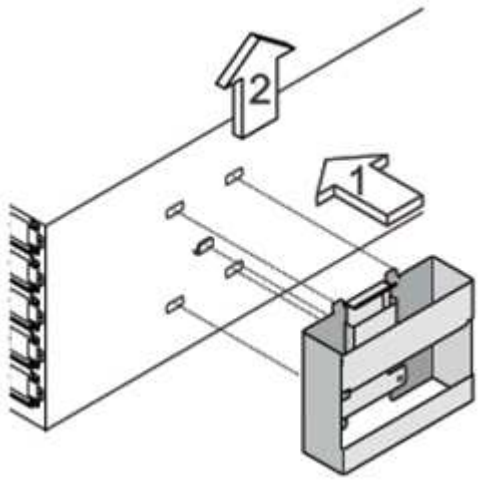

3. Reinstall any power supplies and IOMs you removed prior to installing your disk shelf into the rack.
4. If you are installing a DS460C disk shelf, install the drives into the drive drawers; otherwise, go to the next step.

> Always wear an ESD wrist strap grounded to an unpainted surface on your storage enclosure chassis to prevent static discharges.
>
> If a wrist strap is unavailable, touch an unpainted surface on your storage enclosure chassis before handling the disk drive.

If you purchased a partially populated shelf, meaning that the shelf has less than the 60 drives it supports, for each drawer, install the drives as follows:

- Install the first four drives into the front slots (0, 3, 6, and 9).

  > **Risk of equipment malfunction:** To allow for proper air flow and prevent overheating, always install the first four drives into the front slots (0, 3, 6, and 9).

- For the remaining drives, evenly distribute them across each drawer.

The following illustration shows how the drives are numbered from 0 to 11 in each drive drawer within the shelf.

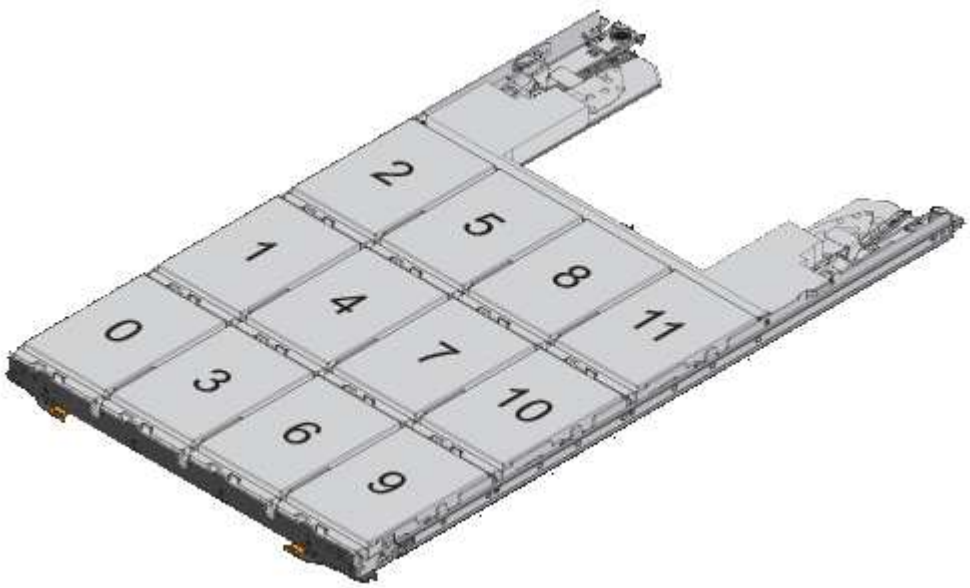

a. Open the top drawer of the shelf.
b. Remove a drive from its ESD bag.
c. Raise the cam handle on the drive to vertical.
d. Align the two raised buttons on each side of the drive carrier with the matching gap in the drive channel on the drive drawer.

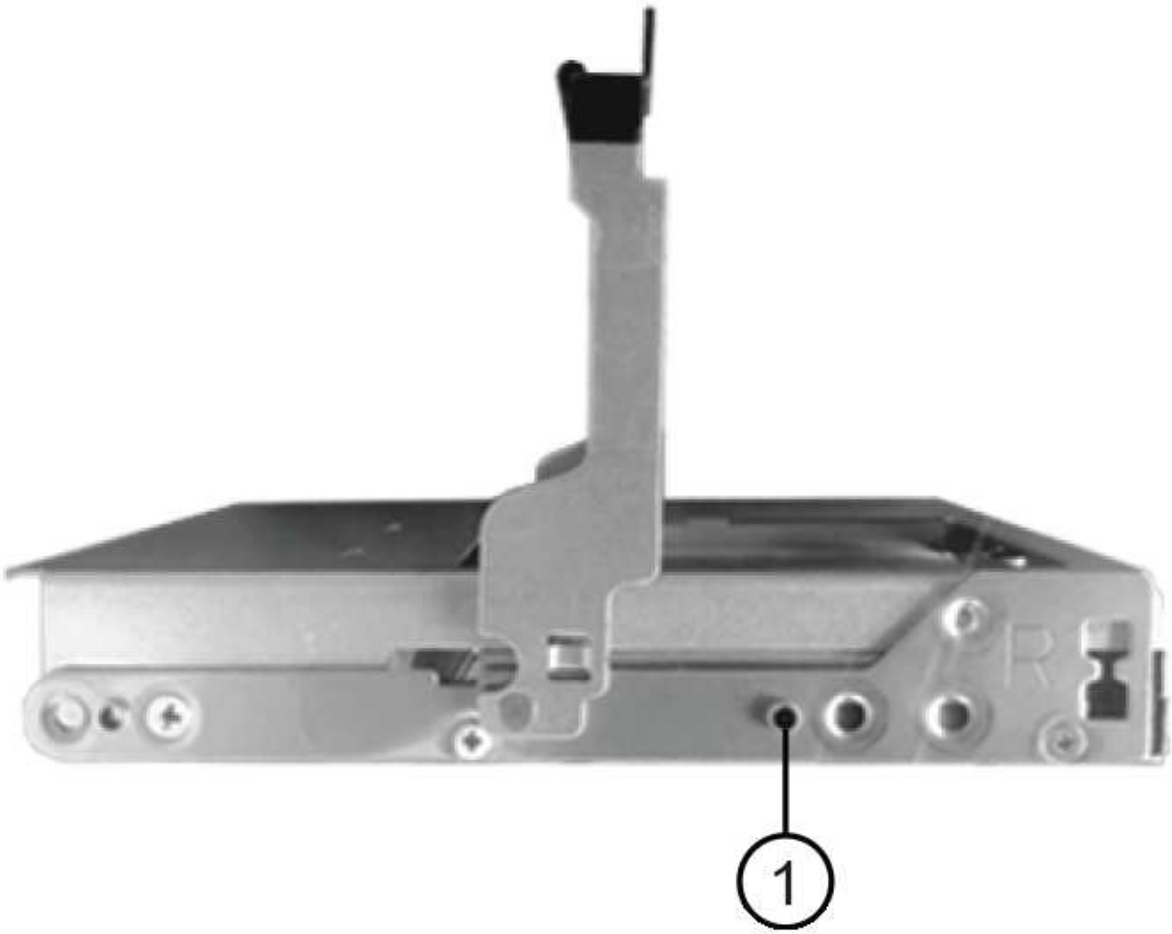

1	Raised button on the right side of the drive carrier

e. Lower the drive straight down, and then rotate the cam handle down until the drive snaps into place under the orange release latch.

f. Repeat the previous substeps for each drive in the drawer.

   You must be sure that slots 0, 3, 6, and 9 in each drawer contain drives.

g. Carefully push the drive drawer back into the enclosure.

Possible loss of data access: Never slam the drawer shut. Push the drawer in slowly to avoid jarring the drawer and causing damage to the storage array.

h. Close the drive drawer by pushing both levers towards the center.

i. Repeat these steps for each drawer in the disk shelf.

j. Attach the front bezel.

   1. If you are adding multiple disk shelves, repeat the previous steps for each disk shelf you are installing.
   2. Connect the power supplies for each disk shelf:

k. Connect the power cords first to the disk shelves, securing them in place with the power cord retainer, and then connect the power cords to different power sources for resiliency.

l. Turn on the power supplies for each disk shelf and wait for the disk drives to spin up.

   1. Set the shelf ID for each shelf you are hot-adding to an ID that is unique within the HA pair or single-controller configuration.

      A valid shelf ID is 00 through 99. It is recommended that you set the shelf IDs so that IOM6 shelves use lower numbers (1 - 9) and IOM12/IOM12B shelves use higher numbers (10 and greater).

      If you have a platform model with onboard storage, shelf IDs must be unique across the internal shelf and externally attached shelves. It is recommended that you set the internal shelf to 0. In MetroCluster IP configurations, only the external shelf names apply, and therefore the shelf names do not need to be unique.

m. If needed, verify shelf IDs already in use by running Active IQ Config Advisor.

   NetApp Downloads: Config Advisor

   You can also run the `storage shelf show -fields shelf-id` command to see a list of shelf IDs already in use (and duplicates if present) in your system.

n. Access the shelf ID button behind the left end cap.

o. Change the first number of the shelf ID by pressing and holding the orange button until the first number on the digital display blinks, which can take up to three seconds.

p. Press the button to advance the number until you reach the desired number.

q. Repeat substeps c and d for the second number.

r. Exit the programming mode by pressing and holding the button until the second number stops blinking, which can take up to three seconds.

s. Power cycle the shelf to make the shelf ID take effect.

   You must turn off both power switches, wait 10 seconds, and then turn them back on to complete the power cycle.

t. Repeat substeps b through g for each shelf you are hot-adding.

Cable shelves for a hot-add

How you cable an IOM12/IOM12B shelf to a stack of IOM6 shelves depends on whether the IOM12/IOM12B shelf is the initial IOM12/IOM12B shelf, meaning no other IOM12/IOM12B shelf exists in the stack, or whether it is an additional IOM12/IOM12B shelf to an existing mixed stack, meaning one or more IOM12/IOM12B shelves already exists in the stack. It also depends on whether the stack has multipath HA, tri-path HA, multipath, single-path HA, or single-path connectivity.

Before you begin

- You must have met the system requirements.

  Requirements for a hot-add

- You must have completed the preparation procedure, if applicable.

  Prepare to manually assign drive ownership for a hot-add

- You must have installed the shelves, powered them on, and set the shelf IDs.

  Install shelves for a hot-add

About this task

- You always hot-add IOM12/IOM12B shelves to the logical last shelf in a stack to maintain a single speed transition within the stack.

  By hot-adding IOM12/IOM12B shelves to the logical last shelf in a stack, the IOM6 shelves remain grouped together and the IOM12/IOM12B shelves remain grouped together so that there is a single speed transition between the two groups of shelves.

  For example:

  - In an HA pair, a single speed transition within a stack having two IOM6 shelves and two IOM12/IOM12B shelves is depicted as:

    ```
    Controller <-> IOM6 <-> IOM6 <---> IOM12/IOM12B <-> IOM12/IOM12B <->
    Controller
    ```

  - In an HA pair with internal storage (IOM12E/IOM12G), a single speed transition within a stack having two IOM12/IOM12B shelves and two IOM6 shelves is depicted as:

    ```
    IOM12E 0b/IOM12G 0b1 <-> IOM12/IOM12B <-> IOM12/IOM12B <---> IOM6 <->
    IOM6 <-> IOM12E 0a/IOM12G 0a
    ```

The internal storage port 0b/0b1 is the port from the internal storage (expander) and because it connects to the hot-added IOM12/IOM12B shelf (the last shelf in the stack), the group of IOM12/IOM12B shelves is kept together and a single transition is maintained through the stack and internal IOM12E/IOM12G storage.

- Only a single speed transition is supported in a mixed stack. You cannot have additional speed transitions. For example, you cannot have two speed transitions within a stack, which is depicted as:

```
Controller <-> IOM6 <-> IOM6 <---> IOM12/IOM12B <-> IOM12/IOM12B <--->
IOM6 <-> Controller
```

- You can hot-add IOM6 shelves to a mixed stack. However, you must hot-add them to the side of the stack with the IOM6 shelves (existing group of IOM6 shelves) in order to maintain the single speed transition in the stack.
- You cable IOM12/IOM12B shelves by connecting the SAS ports on the IOM A path first, and then repeat the cabling steps for the IOM B path, as applicable to your stack connectivity.

  In a MetroCluster configuration, you cannot use the IOM B path.

- The initial IOM12/IOM12B shelf (the shelf connecting to the logical last IOM6 shelf) always connects to the IOM6 shelf circle ports (not square ports).
- The SAS cable connectors are keyed; when oriented correctly into a SAS port, the connector clicks into place.

  For shelves, you insert a SAS cable connector with the pull tab oriented down (on the underside of the connector). For controllers, the orientation of SAS ports can vary depending on the platform model; therefore, the correct orientation of the SAS cable connector varies.

- You can reference the following illustration for cabling IOM12/IOM12B shelves to an IOM6 shelf stack in a configuration that is not using FC-to-SAS bridges.

  This illustration is specific to a stack with multipath HA connectivity; however, the cabling concept can be applied to stacks with multipath, tri-path HA, single-path HA, single-path connectivity, and stretch MetroCluster configurations.

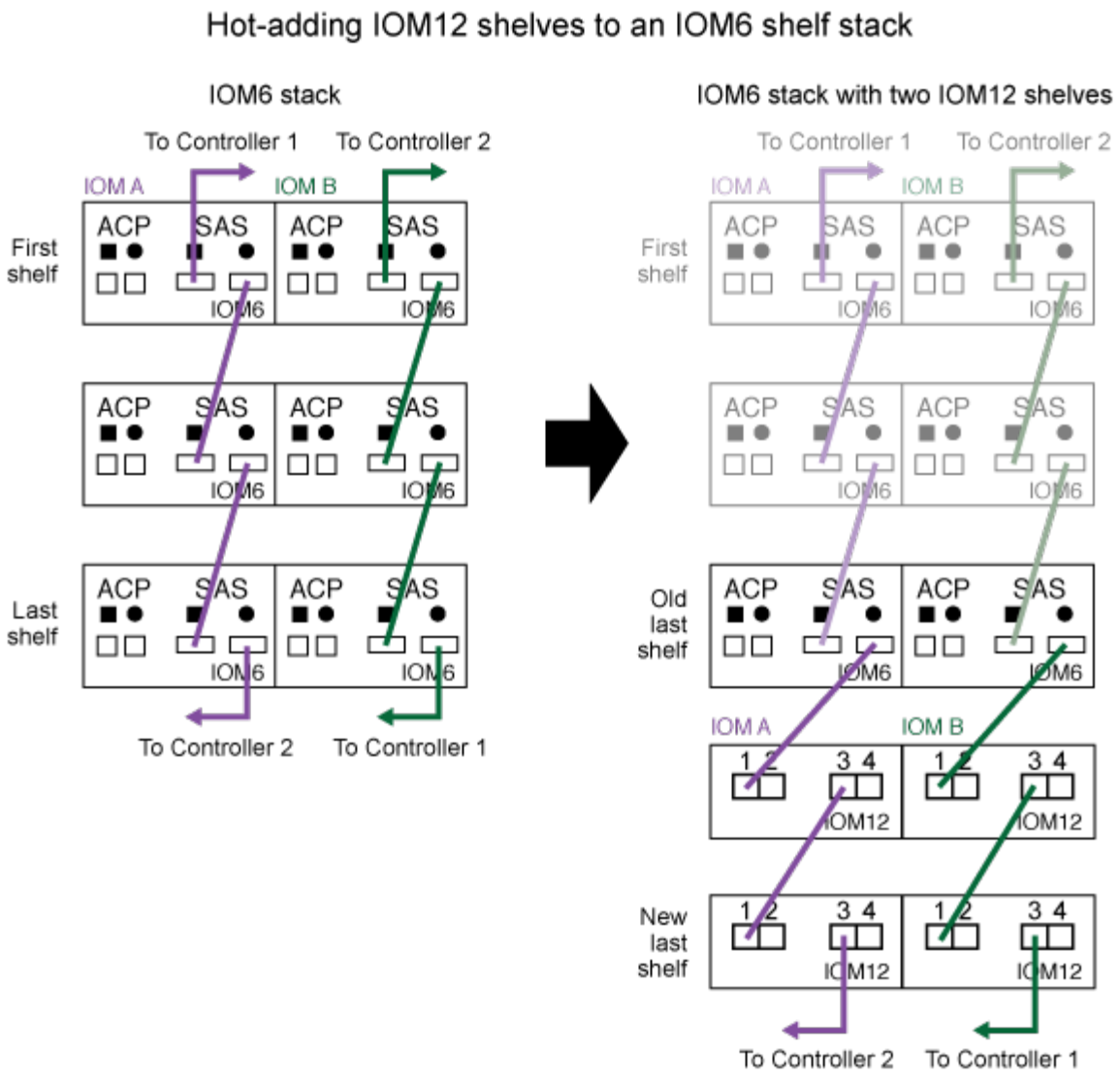

- You can reference the following illustration for cabling IOM12/IOM12B shelves to an IOM6 shelf stack in a bridge-attached MetroCluster configuration.

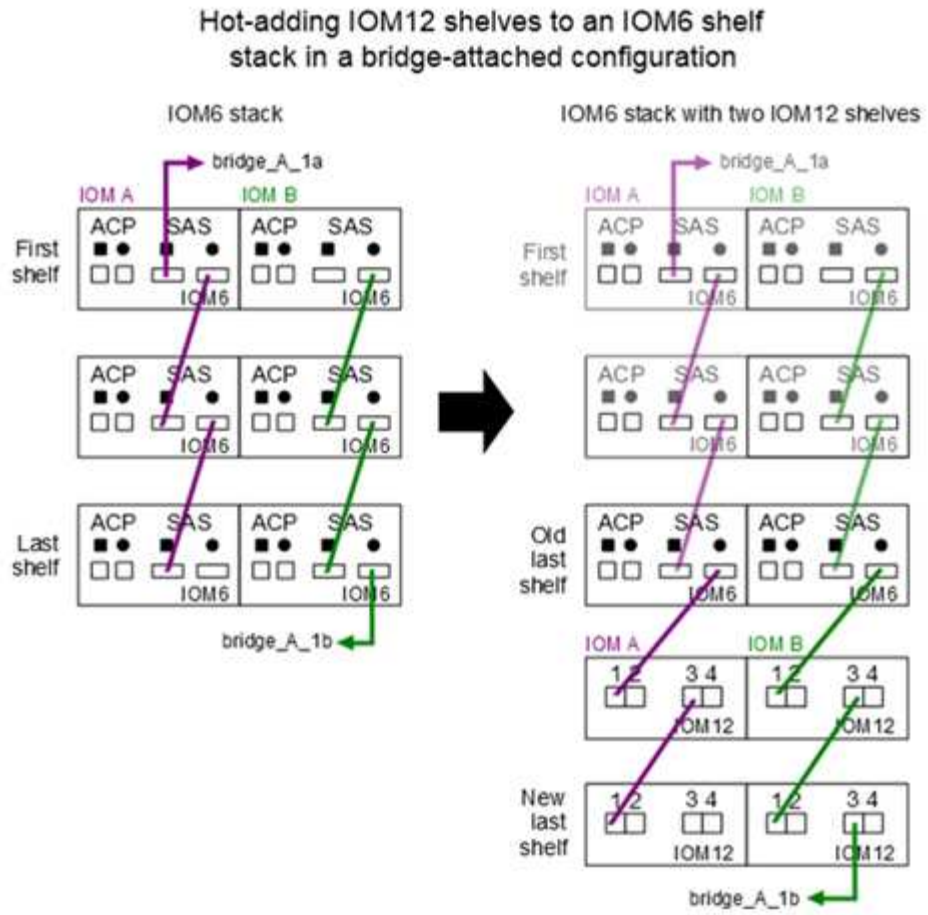

Steps

1. Physically identify the logical last shelf in the stack.

   Depending on your platform model and stack connectivity (multipath HA, tri-path HA, multipath, single-path HA, or single-path), the logical last shelf is the shelf having controller-to-stack connections from controller SAS ports B and D, or it is the shelf having no connections to any controllers (because the controller-to-stack connectivity is to the logical top of the stack, through the controller SAS ports A and C).

2. If the IOM12/IOM12B shelf you are hot-adding is the initial IOM12/IOM12B shelf being added to the IOM6 stack, meaning no other IOM12/IOM12B shelf exists in the IOM6 shelf stack, complete the applicable substeps.

   > Make sure that you wait at least 70 seconds between disconnecting a cable and reconnecting it, and when you are replacing a cable for another one.

   Otherwise, go to step 3.

If your IOM6 stack connectivity is…	Then…
Multipath HA, tri-path HA, multipath, or single-path HA with controller connectivity to the logical last shelf (including stretch MetroCluster configurations)	a. Disconnect the controller-to-stack cable from the last IOM6 shelf IOM A circle port to the controller or bridge. Make note of the controller port. Put the cable aside. It is no longer needed. Otherwise; go to substep e. b. Cable the shelf-to-shelf connection between the last IOM6 shelf IOM A circle port (from substep a) to the new IOM12/IOM12B shelf IOM A port 1. Use a SAS copper QSFP-to-Mini-SAS HD cable. c. If you are hot-adding another IOM12/IOM12B shelf, cable the shelf-to-shelf connection between the IOM12/IOM12B shelf IOM A port 3, of the shelf you just cabled, and the next IOM12/IOM12B shelf IOM A port 1. Use a SAS copper Mini-SAS HD-to-Mini-SAS HD cable. Otherwise, go to the next substep. d. Reestablish the controller-to-stack connection by cabling the same port on the controller or bridge (in substep a) to the new last IOM12/IOM12B shelf IOM A port 3. Use a SAS copper QSFP-to-Mini-SAS HD cable or Mini-SAS HD-to-Mini-SAS HD cable, as appropriate for the port type on the controller. e. Repeat substeps a through d for IOM B. Otherwise, go to step 4.

If your IOM6 stack connectivity is…	Then…
Bridge-attached connectivity in a MetroCluster configuration	a. Disconnect the bottom bridge-to-stack cable from the last IOM6 shelf IOM A circle port to the bridge. Make note of the bridge port. Put the cable aside. It is no longer needed. Otherwise; go to substep e. b. Cable the shelf-to-shelf connection between the last IOM6 shelf IOM A circle port (from substep a) to the new IOM12/IOM12B shelf IOM A port 1. Use a SAS copper QSFP-to-Mini-SAS HD cable. c. If you are hot-adding another IOM12/IOM12B shelf, cable the shelf-to-shelf connection between the IOM12/IOM12B shelf IOM A port 3, of the shelf you just cabled, and the next IOM12/IOM12B shelf IOM A port 1. Use a SAS copper Mini-SAS HD-to-Mini-SAS HD cable. Otherwise, go to the next substep. d. Repeat substeps b and c to cable the shelf-to-shelf connections for IOM B. e. Reestablish the bottom bridge-to-stack connection by cabling the same port on the bridge (in substep a) to the new last IOM12/IOM12B shelf IOM A port 3. Use a SAS copper QSFP-to-Mini-SAS HD cable or Mini-SAS HD-to-Mini-SAS HD cable, as appropriate for the port type on the controller. f. Go to step 4.

If your IOM6 stack connectivity is…	Then…
Single-path HA or single-path with no controller connectivity to the logical last shelf	a. Cable the shelf-to-shelf connection between the last IOM6 shelf IOM A circle port and the new IOM12/IOM12B shelf IOM A port 1. Use a SAS copper QSFP-to-Mini-SAS HD cable. b. Repeat the above substep for IOM B. c. If you are hot-adding another IOM12/IOM12B shelf, repeat substeps a and b. Otherwise, go to step 4.

3. If the IOM12/IOM12B shelf you are hot-adding is an additional IOM12/IOM12B shelf to an existing mixed stack, meaning one or more IOM12/IOM12B shelves already exists in the stack, complete the applicable substeps.

> Make sure that you wait at least 70 seconds between disconnecting a cable and reconnecting it, and if you are replacing a cable for a longer one.

If your mixed stack connectivity is…	Then…
Multipath HA, tri-path HA, multipath, or single-path HA with controller connectivity to the logical last shelf, or bridge-attached connectivity in a MetroCluster configuration	a. Move the controller-to-stack cable from the last IOM12/IOM12B shelf IOM A port 3 to the same port on the new last IOM12/IOM12B shelf. b. If you are hot-adding one IOM12/IOM12B shelf, cable the shelf-to-shelf connection between the old last IOM12/IOM12B shelf IOM A port 3 to the new last IOM12/IOM12B shelf IOM A port 1. Use a SAS copper Mini-SAS HD-to-Mini-SAS HD cable. Otherwise, go to the next substep. c. If you are hot-adding more than one IOM12/IOM12B shelf, cable the shelf-to-shelf connection between the old last IOM12/IOM12B shelf IOM A port 3 and the next IOM12/IOM12B shelf IOM A port 1, and then repeat this for any additional IOM12/IOM12B shelves. Use additional SAS copper Mini-SAS HD-to-Mini-SAS HD cables. Otherwise, go to the next substep. d. Repeat substeps a through c for IOM B. Otherwise, go to step 4.
Bridge-attached connectivity in a MetroCluster configuration	a. Move the bottom bridge-to-stack cable from the old last IOM12/IOM12B shelf to the same port on the new last IOM12/IOM12B shelf. b. Cable the shelf-to-shelf connection between the old last IOM12/IOM12B shelf IOM A port 3 and the next IOM12/IOM12B shelf IOM A port 1, and then repeat this for any additional IOM12/IOM12B shelves. Use a SAS copper Mini-SAS HD-to-Mini-SAS HD cable. c. Cable the shelf-to-shelf connection between the old last IOM12/IOM12B shelf IOM B port 3 and the next IOM12/IOM12B shelf IOM B port 1, and then repeat this for any additional IOM12/IOM12B shelves. d. Go to step 4.

If your mixed stack connectivity is…	Then…
Single-path HA or single-path with no controller connectivity to the logical last shelf	a. Cable the shelf-to-shelf connection between the last IOM12/IOM12B shelf IOM A port 3 and the new last IOM12/IOM12B shelf IOM A port 1. Use a SAS copper Mini-SAS HD-to-Mini-SAS HD cable. b. Repeat the above substep for IOM B. c. If you are hot-adding another IOM12/IOM12B shelf, repeat substeps a and b. Otherwise, go to step 4.

4. Verify that the SAS connections are cabled correctly.

   If any cabling errors are generated, follow the corrective actions provided.

   NetApp Downloads: Config Advisor

5. If you disabled automatic drive assignment as part of the preparation for this procedure, you need to manually assign drive ownership and then re-enable automatic drive assignment, if needed.

   Otherwise, you are done with this procedure.

   Complete the hot-add

   All MetroCluster configurations require manual drive assignment.

Complete the hot-add

If you disabled automatic drive assignment as part of the preparation for hot-adding the IOM12/IOM12B shelves to the stack of IOM6 shelves, you need to manually assign drive ownership and then reenable automatic drive assignment if needed.

Before you begin

You must have already cabled your shelf as instructed for your system.

Cable shelves for a hot-add

Steps

1. Display all unowned drives: `storage disk show -container-type unassigned`

   If you have an HA pair, you can enter the command on either controller module.

2. Assign each drive: `storage disk assign -disk` *`disk_name`* `-owner` *`owner_name`*

   If you have an HA pair, you can enter the command on either controller module.

   You can use the wild card character to assign more than one drive at once.

3. Reenable automatic drive assignment if needed: `storage disk option modify -node node_name -autoassign on`

   If you have an HA pair, you must reenable automatic drive assignment on both controller modules.

Change a shelf ID - shelves with IOM12/IOM12B modules

You can change a shelf ID in a system when ONTAP is not yet running or when hot-adding a shelf prior to it being cabled to the system. You can also change a shelf ID when ONTAP is up and running (controller modules are available to serve data) and all drives in the shelf are unowned, spares, or part of offlined aggregate(s).

Before you begin

- If ONTAP is up and running (controller modules are available to serve data), you must have verified that all drives in the shelf are unowned, spares, or part of offlined aggregate(s).

  You can verify the state of the drives by using the `storage disk show -shelf shelf_number` command. Output in the Container Type column should display spare or broken if it is a failed drive. Additionally, the Container Name and Owner columns should have a dash.

- You can verify shelf IDs already in use in your system by running Active IQ Config Advisor or using the `storage shelf show -fields shelf-id` command.

  NetApp Downloads: Config Advisor

About this task

- A valid shelf ID is 00 through 99.
- Shelf IDs must be unique within an HA pair or single-controller configuration.

  If you have a platform with internal storage, shelf IDs must be unique across the internal disk shelf and any externally attached disk shelves.

- You must power cycle a shelf in order for the shelf ID to take effect.

  The amount of time you wait before turning the power back on depends on the state of ONTAP, as described later in this procedure.

Steps

1. Turn on the power to the disk shelf if it is not already on.
2. Remove the left end cap to locate the button near the shelf LEDs.
3. Change the first number of the shelf ID by pressing and holding the orange button until the first number on the digital display blinks, which can take up to three seconds.

   > If the ID takes longer than three seconds to blink, press the button again, making sure to press it in all the way.
   >
   > This activates the disk shelf ID programming mode.

4. Press the button to advance the number until you reach the desired number from 0 to 9.

The first number continues to blink.

5. Change the second number of the shelf ID by pressing and holding the button until the second number on the digital display blinks, which can take up to three seconds.

   The first number on the digital display stops blinking.

6. Press the button to advance the number until you reach the desired number from 1 to 9.

   The second number continues to blink.

7. Lock in the desired number and exit the programming mode by pressing and holding the button until the second number stops blinking, which can take up to three seconds.

   Both numbers on the digital display start blinking and the amber LED on the operator display panel illuminates after about five seconds, alerting you that the pending disk shelf ID has not yet taken effect.

8. Power cycle the disk shelf to make the shelf ID take effect.

   You must turn off both power switches, wait the appropriate amount of time, and then turn them back on to complete the power cycle.

   - If ONTAP is not yet running or you are hot-adding a shelf (that has not yet been cabled to the system), wait at least 10 seconds.
   - If ONTAP is running (controllers are available to serve data), and all disk drives in the shelf are unowned, spares, or part of offlined aggregate(s), wait at least 70 seconds.

     This time allows ONTAP to properly delete the old shelf address and update the copy of the new shelf address.

9. Replace the left end cap.
10. Repeat steps 1 through 9 for each additional disk shelf.
11. Verify that your system does not have duplicate shelf IDs.

    When two or more disk shelves have the same ID, the system assigns the duplicate disk shelf a soft ID number equal to or greater than 100. You must change the soft ID (duplicate) number.

    a. Run Active IQ Config Advisor to check for duplicate shelf ID alerts or run the `storage shelf show -fields shelf-id` command to see a list of shelf IDs already in use including any duplicate IDs.
    b. If your system has any duplicate shelf IDs, change the duplicate shelf IDs by repeating this procedure.

SAS cabling rules, worksheets, and examples

SAS cabling rules, worksheets, and examples overview - shelves with IOM12/IOM12B modules

To help you cable your SAS drive shelves with IOM12/IOM12B modules to your storage system, you can use any of the available SAS cabling rules, worksheets, and examples content as needed.

SAS cabling rules and concepts

- Configurations

- Controller slot numbering
- Shelf-to-shelf connections
- Controller-to-stack connections
- Mini-SAS HD SAS optical cables
- Tri-path HA connectivity

Cabling worksheets and examples

- Multipath HA configurations
- Platforms with internal storage
- Quad-path HA configurations

Cabling worksheet templates

- Multipathed connectivity
- Quad-pathed connectivity
- How to read a worksheet for multipathed connectivity
- How to read a worksheet for quad-pathed connectivity

SAS cabling rules and concepts - shelves with IOM12/IOM12B modules

Disk shelves with IOM12/IOM12B modules can be cabled in HA pair and single-controller configurations (for supported platforms) by applying the SAS cabling rules: configuration rules, controller slot numbering rules, shelf-to-shelf connection rules, controller-to-stack connection rules, and if applicable, mini-SAS HD SAS optical cable rules.

> The SAS cabling rules regarding controller slot numbering rules, shelf-to-shelf connection rules, and controller-to-stack connection rules described in this guide are the same rules that apply to all SAS disk shelves, whether they have IOM12/IOM12B, IOM6, or IOM3 modules. However, the information in this guide is specific to the unique characteristics of disk shelves with IOM12/IOM12B modules and their use in supported configurations.

The SAS cabling rules regarding configuration rules and mini-SAS HD SAS optical cable rules described in this guide are specific to disk shelves with IOM12/IOM12B modules.

The SAS cabling rules described in this guide balance SAS cabling between the on-board SAS ports and host bus adapter SAS ports to provide highly available storage controller configurations and meet the following goals:

- Provide a single, easily understood universal algorithm for all SAS products and configurations
- Yield the same physical cabling when generating the Bill of Materials (BOM), followed in the factory, and in the field
- Are verifiable by configuration-checking software and tools
- Provide maximum possible resilience to maintain availability and minimize the reliance on controller takeovers

You should avoid deviating from the rules; deviations might reduce reliability, universality, and commonality.

Configuration rules

Disk shelves with IOM12/IOM12B modules are supported on specific types of HA pair and single-controller configurations.

> The FAS25XX platforms are not addressed in this content.

> For current information about supported cabling configurations for your platform model, see the Hardware Universe.
>
> NetApp Hardware Universe

- HA pair configurations must be cabled as multipath HA or quad-path HA configurations with the following exceptions:
  - Platforms with internal storage do not support quad-path HA connectivity.
  - A FAS2800 HA pair can be cabled as tri-path HA.

    Information about the FAS2800 connectivity can be found in the Tri-path HA connectivity section.

  - Platforms with internal storage can be cabled as single-path HA configurations (from port 0b/0b1 to external shelves) to support connectivity to an external SAS tape backup device (from port 0a).

> For FAS2800 HA pairs, although the cabling to external shelves is single-path HA, because of each controller's internal connection of port 0b to its local expander (IOM12G) and port 0c to its partner's expander, the HA pair configuration is multipath HA.

- Single-controller configurations must be cabled as multipath or quad-path configurations, with the following exceptions:
  - FAS2600 series single-controller configurations can be cabled as single-path configurations.

    Because the internal storage uses single-path connectivity, ONTAP issues occasional warnings that mixed paths are detected. To avoid these warnings, you can use single-path connectivity to the external disk shelves. Additionally, you can use single-path connectivity when an external SAS tape backup device is used.

  - FAS2600 series single-controller configurations do not support quad-path connectivity.

Controller slot numbering rules

For the purpose of applying cabling rules across all supported HA pairs and single-controller configurations, a controller slot numbering convention is used.

- For all HA pairs and single-controller configurations, the following applies:
  - A SAS HBA in a physical PCI slot is defined as occupying PCI slot 1, 2, 3, and so on regardless of the slot's physical label on a controller.

    For example, if SAS HBAs occupied physical PCI slots 3, 5, and 7, they would be designated as slots 1, 2, and 3 for the purpose of applying the SAS cabling rules.

  - An onboard SAS HBA is defined as occupying PCI slot 0 just as it is labeled on a controller.
  - Each port in each slot is defined just as it is labeled on a controller. For example, slot 0 with two ports is referred to as 0a and 0b. Slot 1 with four ports is referred to as 1a, 1b, 1c, and 1d.

In this document, slots and the slot ports are depicted as follows:

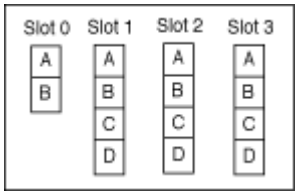

Shelf-to-shelf connection rules

When you have more than one disk shelf in a stack of disk shelves, they connect to each other through each SAS domain (IOM A and IOM B) using the applicable “standard” or “double-wide” shelf-to-shelf cabling. Your use of “standard” or “double-wide” shelf-to-shelf cabling depends on the configuration you have.

Standard shelf-to-shelf connectivity

- Standard shelf-to-shelf connectivity is used in any stack of disk shelves with more than one disk shelf.

  One cable connection is needed between disk shelves in each domain—domain A (IOM A) and domain B (IOM B).

- Best practice is to use IOM ports 3 and 1 for standard shelf-to-shelf connectivity.

  From the logical first shelf to the logical last shelf in a stack, you connect IOM port 3 to the next shelf’s IOM port 1 in domain A and then domain B.

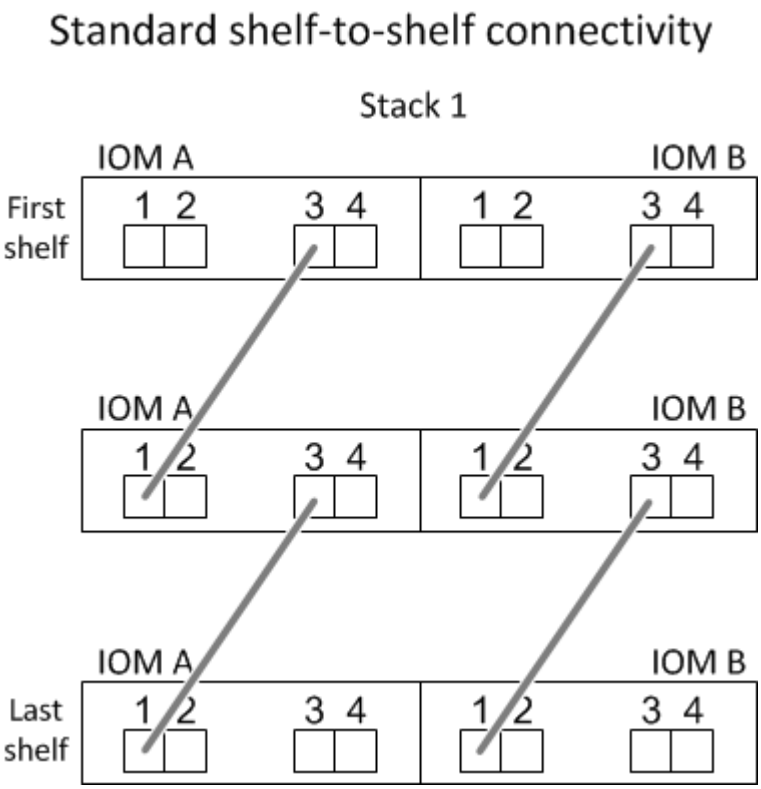

Double-wide shelf-to-shelf connectivity

- Double-wide shelf-to-shelf connectivity is used in quad-pathed (quad-path HA and quad-path) configurations.

- Double-wide shelf-to-shelf connectivity requires two cable connections between disk shelves in each domain—domain A (IOM A) and domain B (IOM B).

  The first cable connection is cabled as standard shelf-to-shelf connectivity (using IOM ports 3 and 1); the second cable connection is cabled as double-wide shelf-to-shelf connectivity (using IOM ports 4 and 2).

  From the logical first shelf to the logical last shelf in a stack, you connect IOM port 3 to the next shelf's IOM port 1 in domain A and then domain B. From the logical first shelf to the logical last shelf in a stack, you connect IOM port 4 to the next shelf's IOM port 2 in domain A and then domain B. (IOM ports cabled as double-wide connectivity are shown with blue.)

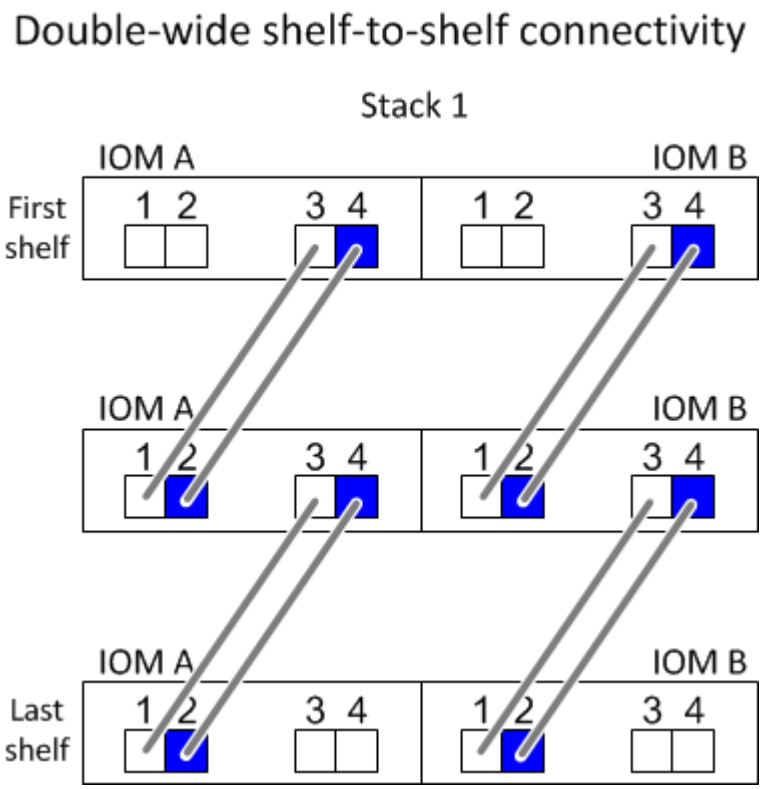

Controller-to-stack connection rules

You can correctly cable the SAS connections from each controller to each stack in an HA pair or in a single-controller configuration by understanding that SAS disk shelves use software-based disk ownership, how controller ports A/C and B/D are connected to stacks, how controller ports A/C and B/D are organized into port pairs, and how platforms with internal storage have their controller ports connected to stacks.

SAS disk shelf software-based disk ownership rule

SAS disk shelves use software-based disk ownership (not hardware-based disk ownership). This means that disk drive ownership is stored on the disk drive rather than it being determined by the topology of the storage system's physical connections (as it is for hardware-based disk ownership). Specifically, disk drive ownership is assigned by ONTAP (automatically or by CLI commands), not by how you cable the controller-to-stack connections.

SAS disk shelves should never be cabled using the hardware-based disk ownership scheme.

Controller A and C port connection rules (for platforms without internal storage)

- A and C ports are always the primary paths to a stack.
- A and C ports always connect to the logical first disk shelf in a stack.
- A and C ports always connect to disk shelf IOM ports 1 and 2.

  IOM port 2 is only used for quad-path HA and quad-path configurations.

- Controller 1 A and C ports always connect to IOM A (domain A).
- Controller 2 A and C ports always connect to IOM B (domain B).

The following illustration highlights how controller ports A and C connect in a multipath HA configuration with one quad-port HBA and two stacks of disk shelves. Connections to stack 1 are shown in blue. Connections to stack 2 are shown in orange.

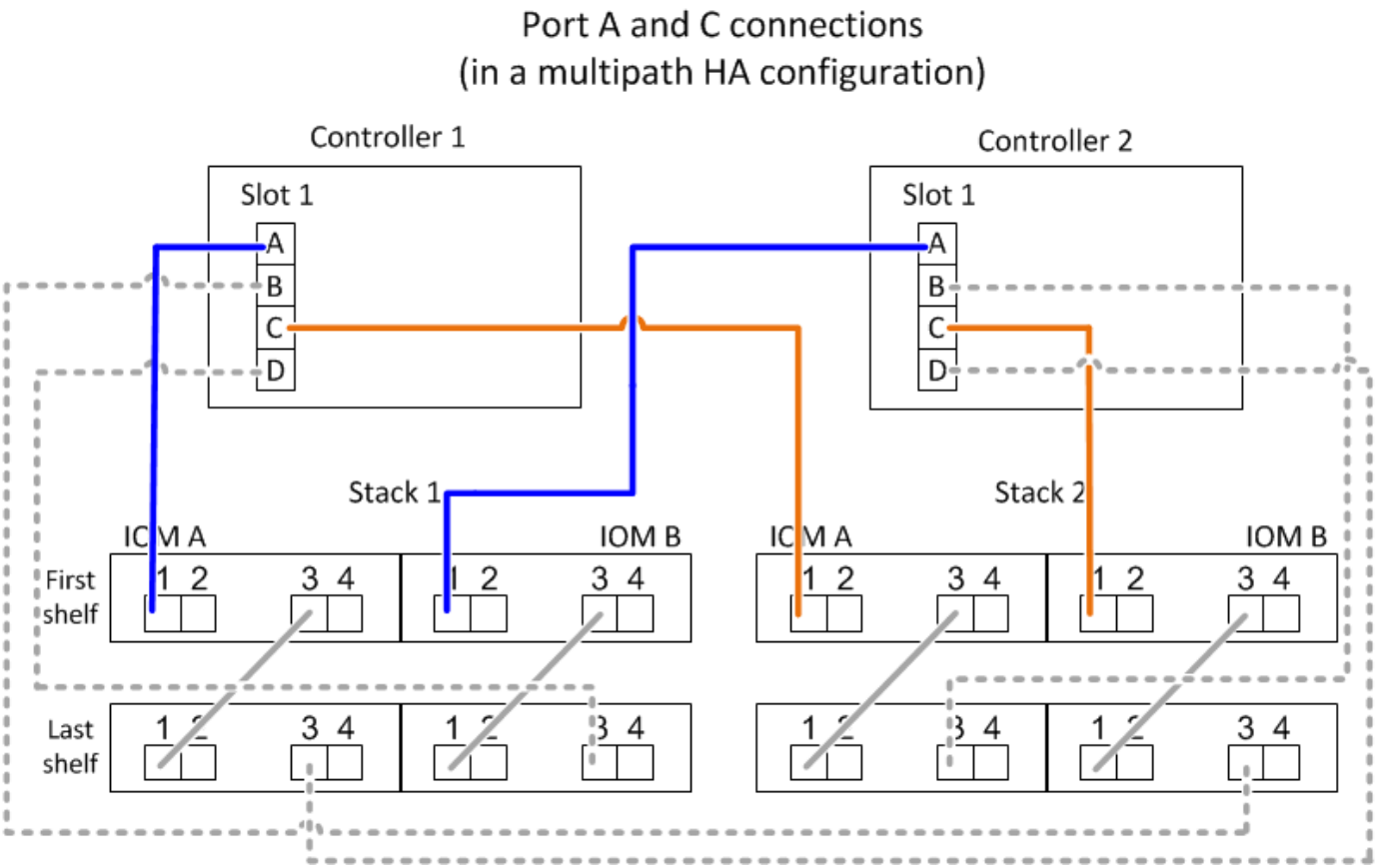

Controller B and D port connection rules (for platforms without internal storage)

- B and D ports are always the secondary paths to a stack.
- B and D ports always connect to the logical last disk shelf in a stack.
- B and D ports always connect to disk shelf IOM ports 3 and 4.

  IOM port 4 is only used for quad-path HA and quad-path configurations.

- Controller 1 B and D ports always connect to IOM B (domain B).
- Controller 2 B and D ports always connect to IOM A (domain A).

- B and D ports are connected to the stacks by offsetting the order of the PCI slots by one so that the first port on the first slot is cabled last.

The following illustration highlights how controller ports B and D connect in a multipath HA configuration with one quad-port HBA and two stacks of disk shelves. Connections to stack 1 are shown in blue. Connections to stack 2 are shown in orange.

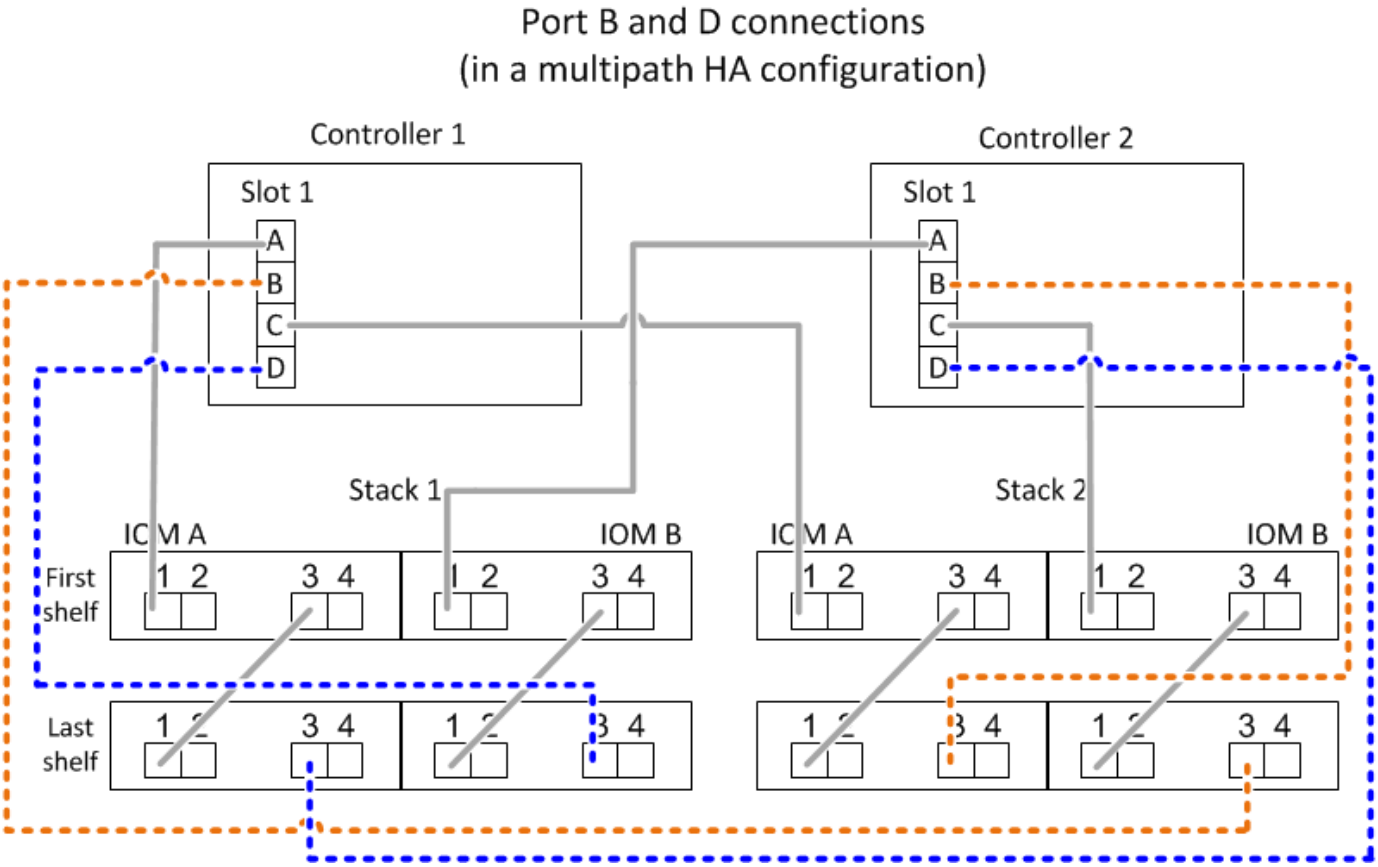

Port pair connection rules (for platforms without internal storage)

Controller SAS ports A, B, C, and D are organized into port pairs using a method that leverages all of the SAS ports for system resiliency and consistency when cabling controller-to-stack connections in HA pair and single-controller configurations.

- Port pairs consist of a controller A or C SAS port and a controller B or D SAS port.

  A and C SAS ports connect to the logical first shelf in a stack. B and D SAS ports connect to the logical last shelf in a stack.

- Port pairs use all SAS ports on each controller in your system.

  You increase system resiliency by incorporating all SAS ports (on an HBA in a physical PCI slot [slot 1-N] and on board the controller [slot 0]) into port pairs. Do not exclude any SAS ports.

- Port pairs are identified and organized as follows:

  a. List A ports and then C ports in sequence of slots (0,1, 2, 3, and so on).

     For example: 1a, 2a, 3a, 1c, 2c, 3c

b. List B ports and then D ports in sequence of slots (0,1, 2, 3, and so on).

   For example: 1b, 2b, 3b, 1d, 2d, 3d

c. Rewrite the D and B port list so that the first port in the list is moved to the end of the list.

   For example: ~~1b~~, 2b, 3b, 1d, 2d, 3d, 1b

   Offsetting the order of the slots by one balances port pairs across multiple slots (physical PCI slots and on board slots) when more than one slot of SAS ports is available; therefore, preventing a stack from being cabled to a single SAS HBA.

d. Pair the A and C ports (listed in step 1) to the D and B ports (listed in step 2) in the order that they are listed.

   For example: 1a/2b, 2a/3b, 3a/1d,1c/2d, 2c/3d, 3c/1b.

   > For an HA pair, the list of port pairs you identify for the first controller is also applicable to the second controller.

- When cabling your system, you can use port pairs in the order in which you identified them or you can skip port pairs:
  - Use port pairs in the order in which you identified (listed) them when all port pairs are needed to cable the stacks in your system.

    For example, if you identified six port pairs for your system and you have six stacks to cable as multipath, you cable the port pairs in the order in which you listed them:

    1a/2b, 2a/3b, 3a/1d,1c/2d, 2c/3d, 3c/1b

  - Skip port pairs (use every other port pair) when not all port pairs are needed to cable the stacks in your system.

    For example, if you identified six port pairs for your system and you have three stacks to cable as multipath, you cable every other port pair in your list:

    1a/2b, ~~2a/3b~~, 3a/1d, ~~1c/2d~~, 2c/3d, ~~3c/1b~~

    > When you have more port pairs than you need to cable the stacks in your system, the best practice is to skip port pairs to optimize the SAS ports on your system. By optimizing SAS ports, you optimize your system's performance.

Controller-to-stack cabling worksheets are convenient tools for identifying and organizing port pairs so that you can cable the controller-to-stack connections for your HA pair or single-controller configuration.

Controller-to-stack cabling worksheet template for multipathed connectivity

Controller-to-stack cabling worksheet template for quad-pathed connectivity

Controller 0b/0b1 and 0a port connection rules for platforms with internal storage

Platforms with internal storage have a unique set of connection rules because each controller must maintain

same domain connectivity between the internal storage (port 0b/0b1) and the stack. This means that when a controller is located in slot A of the chassis (controller 1) it is in domain A (IOM A) and therefore port 0b/0b1 must connect to IOM A in the stack. When a controller is located in slot B of the chassis (controller 2) it is in domain B (IOM B) and therefore port 0b/0b1 must connect to IOM B in the stack.

> FAS25XX platforms are not addressed in this content.

> If you do not connect the 0b/0b1 port to the correct domain (cross-connect domains), you expose your system to resiliency issues that prevent you from performing nondisruptive procedures safely.

- Controller 0b/0b1 port (internal storage port):
  - Controller 1 0b/0b1 port always connects to IOM A (domain A).
  - Controller 2 0b/0b1 port always connects to IOM B (domain B).
  - Port 0b/0b1 is always the primary path.
  - Port 0b/0b1 always connects to the logical last disk shelf in a stack.
  - Port 0b/0b1 always connect to disk shelf IOM port 3.
- Controller 0a port (internal HBA port):
  - Controller 1 0a port always connects to IOM B (domain B).
  - Controller 2 0a port always connects to IOM A (domain A).
  - Port 0a is always the secondary path.
  - Port 0a always connects to the logical first disk shelf in a stack.
  - Port 0a always connect to disk shelf IOM port 1.

The following illustration highlights internal storage port (0b/0b1) domain connectivity to an external stack of shelves:

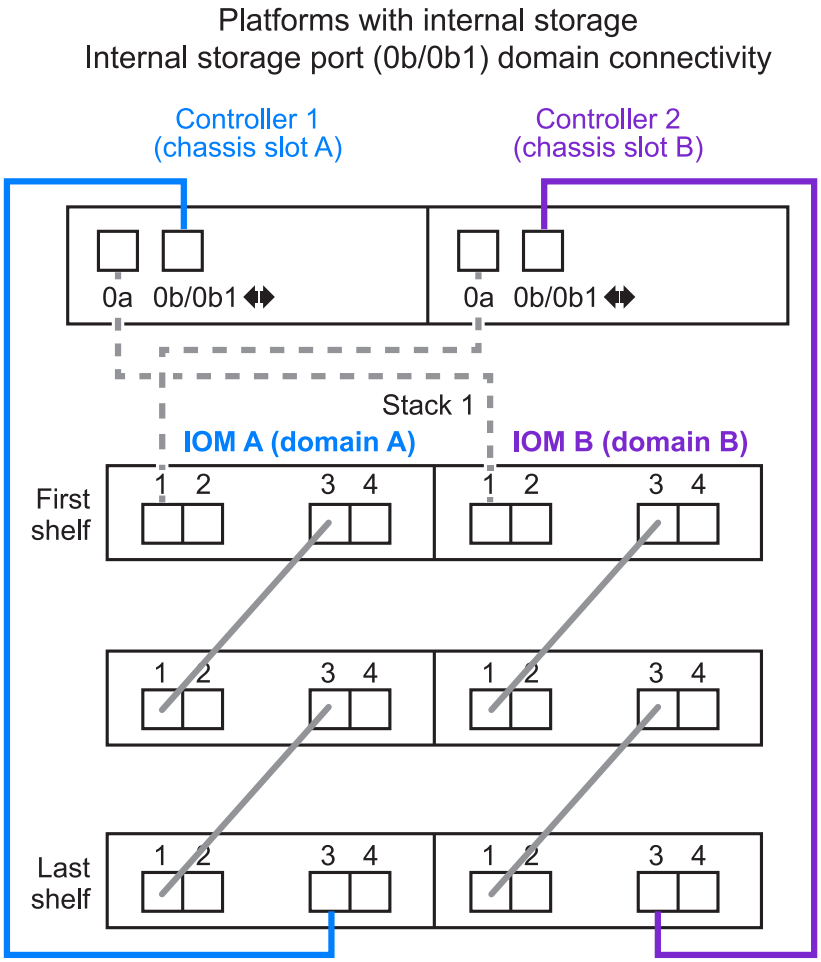

Tri-path HA connectivity

Tri-path HA connectivity is available on FAS2800 HA pairs. Tri-path HA connectivity has three paths from each controller to internal (IOM12G) and external shelves:

- Each controller's internal connection of port 0b to its local IOM12G and port 0c to its partner's IOM12G gives an HA pair multipath HA connectivity.
- The cabling of each controller's external storage ports, 0a and 0b1, gives an HA pair tri-path HA connectivity.

  Ports 0a and 0b1 are cabled across the two controllers when there are no external shelves, or they are cabled to external shelves to achieve tri-path HA connectivity.

The following shows the controller's internal connections and external cabling that achieves tri-path HA connectivity:

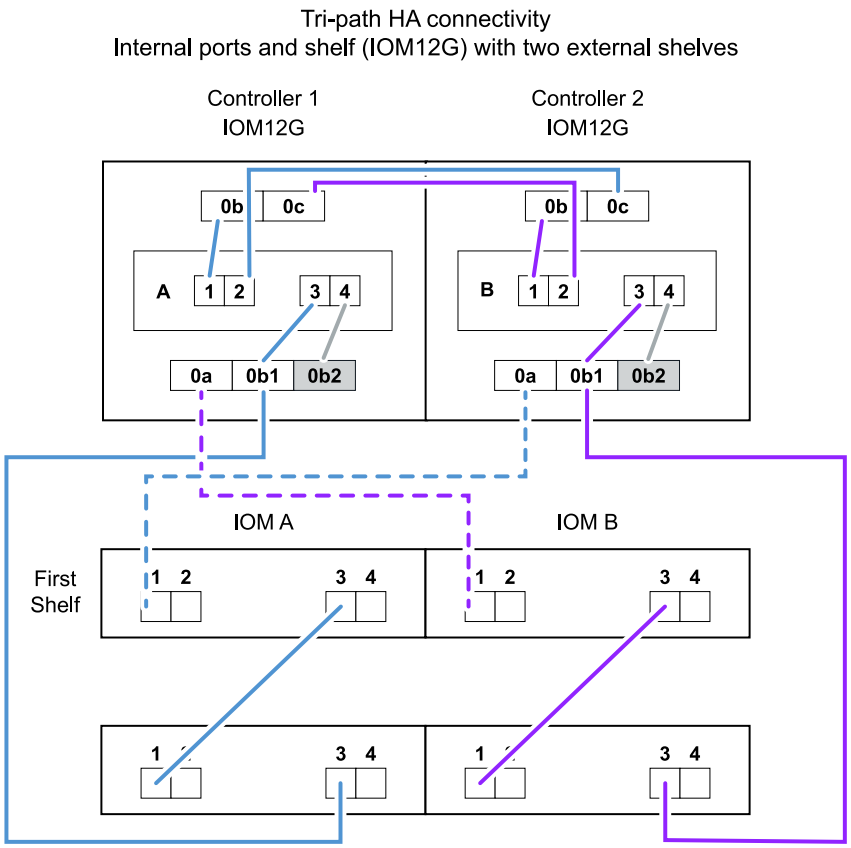

The FAS2800 external SAS ports:

- The 0a port is from the internal HBA (like other platforms with an internal shelf).
- The 0b1 port is from the internal shelf (like the 0b ports on other platforms with an internal shelf).
- The 0b2 port is not used. It is disabled. If a cable is connected to it, an error message is generated.

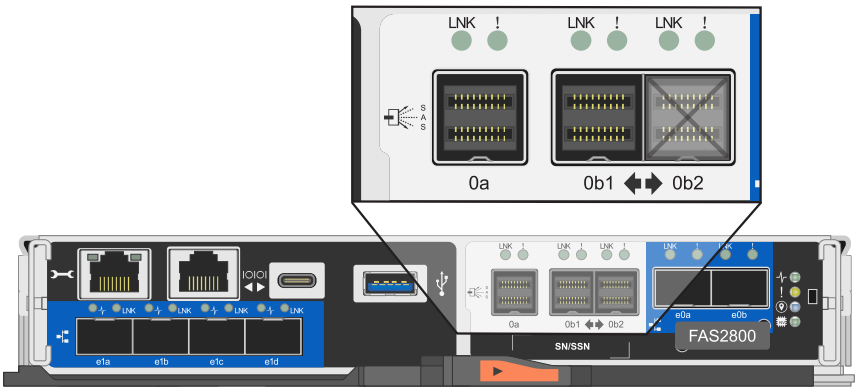

FAS2800 HA pair cabling examples can be found in the Controller-to-stack cabling worksheets and cabling examples for platforms with internal storage section.

Mini-SAS HD SAS optical cable rules

You can use mini-SAS HD SAS optical cables—multimode active optical cable (AOC) cables with mini-SAS HD-to-mini-SAS HD connectors and multimode (OM4) breakout cables with mini-SAS HD-to-LC connectors—to achieve long distance SAS connectivity for certain configurations that have disk shelves with IOM12

modules.

- Your platform and version of ONTAP must support the use of mini-SAS HD SAS optical cables: multimode active optical cable (AOC) cables with mini-SAS HD-to-mini-SAS HD connectors and multimode (OM4) breakout cables with mini-SAS HD-to-LC connectors.

  NetApp Hardware Universe

- SAS optical multimode AOC cables with mini-SAS HD-to-mini-SAS HD connectors can be used for controller-to-stack and shelf-to-shelf connections, and are available in lengths up to 50 meters.
- If you are using SAS optical multimode (OM4) breakout cables with mini-SAS HD-to-LC connectors (for patch panels), the following rules apply:
  - You can use these cables for controller-to-stack and shelf-to-shelf connections.

    If you use multimode breakout cables for shelf-to-shelf connections, you can only use them once within a stack of disk shelves. You must use multimode AOC cables to connect the remaining shelf-to-shelf connections.

    For quad-path HA and quad-path configurations, if you use multimode breakout cables for the shelf-to-shelf double-wide connections between two disk shelves, the best practice is to use identically paired breakout cables.

  - You must connect all eight (four pairs) of the LC breakout connectors to the patch panel.
  - You need to supply the patch panels and inter-panel cables.

    The inter-panel cables must be the same mode as the breakout cable: OM4 multimode.

  - Up to one pair of patch panels can be used in a path.
  - The point-to-point (mini-SAS HD-to-mini-SAS HD) path of any multimode cable cannot exceed 100 meters.

    The path includes the set of breakout cables, patch panels, and inter-panel cables.

  - The total end-to-end path (sum of point-to-point paths from the controller to the last shelf) cannot exceed 300 meters.

    The total path includes the set of breakout cables, patch panels, and inter-panel cables.

- The SAS cables can be SAS copper, SAS optical, or a mix.

  If you are using a mix of SAS copper cables and SAS optical cables, the following rules apply:

  - Shelf-to-shelf connections in a stack must be all SAS copper cables or all SAS optical cables.
  - If the shelf-to-shelf connections are SAS optical cables, the controller-to-stack connections to that stack must also be SAS optical cables.
  - If the shelf-to-shelf connections are SAS copper cables, the controller-to-stack connections to that stack can be SAS optical cables or SAS copper cables.

Controller-to-stack cabling worksheets and cabling examples for multipath HA configurations - shelves with IOM12/IOM12B modules

You can use the controller-to-stack cabling worksheets and cabling examples to cable

your HA pair as a multipath HA configuration.

> This information applies to platforms without internal storage.

- If needed, you can refer to SAS cabling rules and concepts for information about supported configurations, the controller slot numbering convention, shelf-to-shelf connectivity, and controller-to-shelf connectivity (including the use of port pairs).
- If needed, you can refer to How to read a worksheet to cable controller-to-stack connections for multipathed connectivity.
- Cabling examples show controller-to-stack cables as solid or dashed to distinguish controller A and C port connections from controller B and D port connections.

Controller-to-Stack Cable Type Key	
Cable Type	Description
	▪ Connects controller **A** and **C** ports to the logical **first** disk shelf in a stack ▪ The **primary** path from a controller to a stack
	▪ Connects controller **B** and **D** ports to the logical **last** disk shelf in a stack ▪ The **secondary** path from a controller to a stack

- Cables in the cabling examples and their corresponding port pairs in the worksheets are color-coded to distinguish connectivity to each stack in the HA pair.

Controller-to-Stack Cable Color Key			
Cable Color		Connects to...	From...
	Dark blue	Stack 1	Each controller by a unique port pair
	Orange	Stack 2	
	Green	Stack 3	
	Light blue	Stack 4	

- Worksheets and cabling examples show cabling port pairs in the order in which they are listed in the worksheet.

Controller-to-stack cabling worksheets and cabling examples for multipath HA configurations with quad-port SAS HBAs

You can use the completed controller-to-stack cabling worksheets and cabling examples to cable common multipath HA configurations that have quad-port SAS HBAs. These controllers do not have onboard SAS ports.

Multipath HA with one quad-port SAS HBA and one single-shelf stack

The following worksheet and cabling example uses port pair 1a/1d:

Controller-to-Stack Cabling Worksheet for Multipathed Connectivity										
Controller SAS ports	Controllers	Cable to disk shelf IOMs			Stacks					
					1	2	3	4	5	6
		Shelf	IOM	Port	Port pairs					
A and C	1	First	A	1	1a	1c				
	2	First	B	1						
B and D					~~1b~~	~~1d~~				
	1	Last	B	3	1d	1b				
	2	Last	A	3						

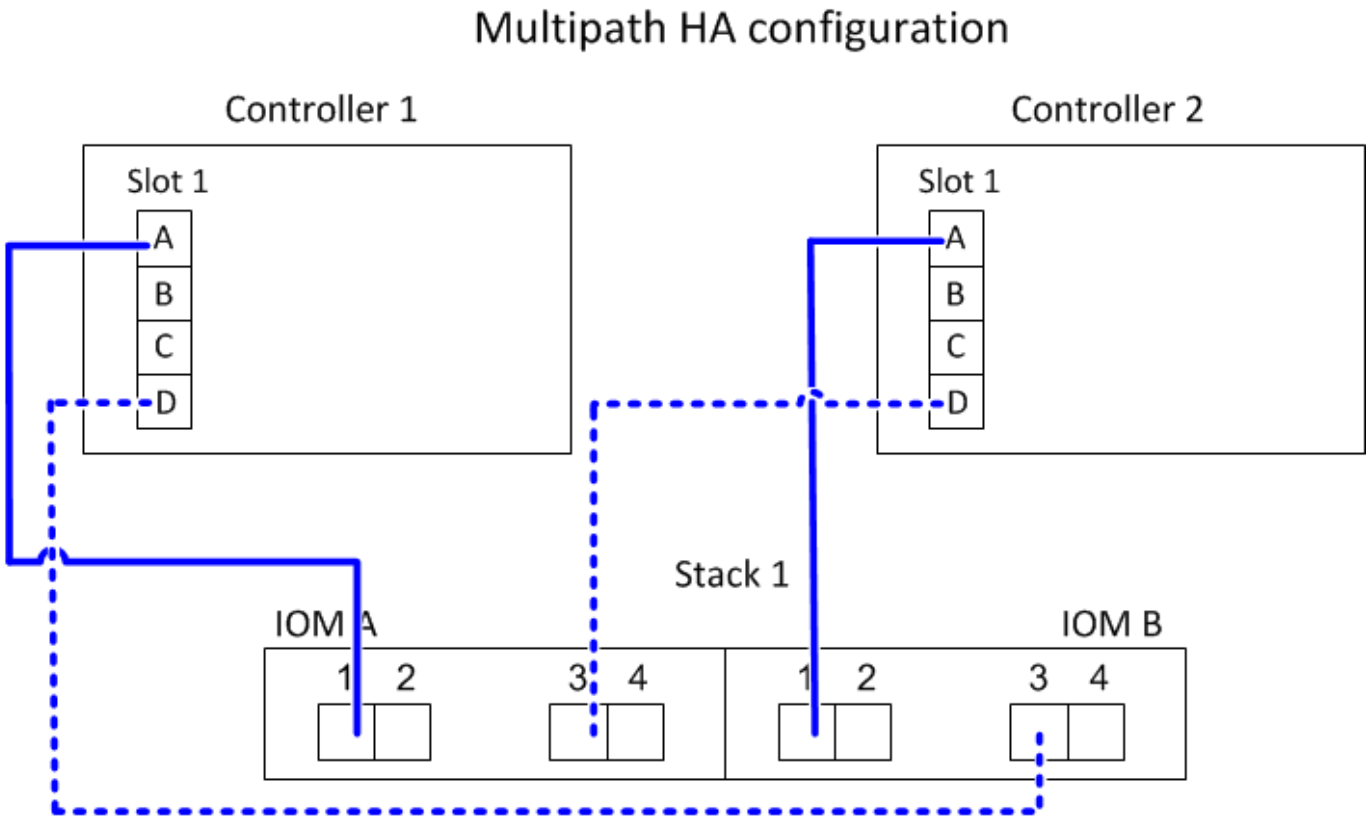

Multipath HA with one quad-port SAS HBA and two single-shelf stacks

The following worksheet and cabling example uses port pairs 1a/1d and 1c/1b:

Controller-to-Stack Cabling Worksheet for Multipathed Connectivity										
Controller SAS ports	Controllers	Cable to disk shelf IOMs			Stacks					
					1	2	3	4	5	6
		Shelf	IOM	Port	Port pairs					
A and C	1	First	A	1	1a	1c				
	2	First	B	1						
B and D					~~1b~~	~~1d~~				
	1	Last	B	3	1d	1b				
	2	Last	A	3						

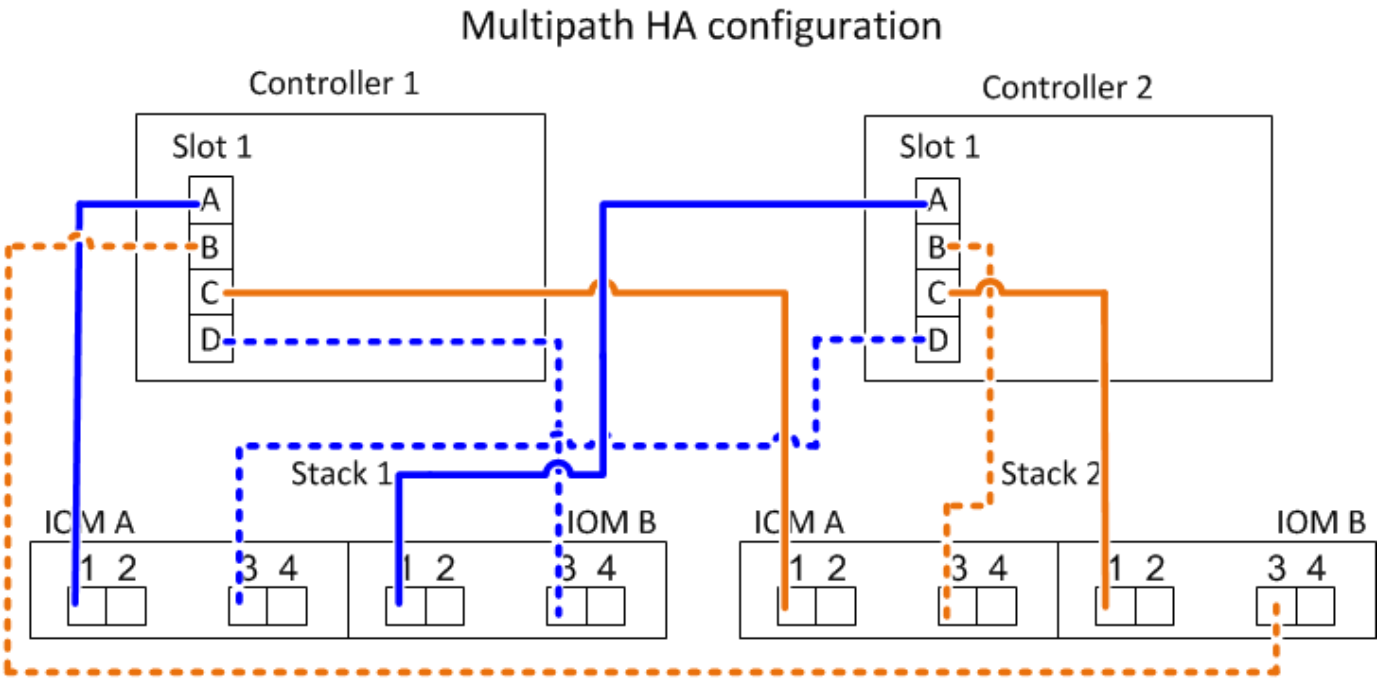

Multipath HA with two quad-port SAS HBAs and two multi-shelf stacks

Four port pairs are available for this configuration: 1a/2b, 2a/1d, 1c/2d, and 2c/1b. You can cable port pairs in the order in which they are identified (listed in the worksheet) or you can cable every other port pair (skip port pairs).

> When you have more port pairs than you need to cable the stacks in your system, the best practice is to skip port pairs to optimize the SAS ports on your system. By optimizing SAS ports, you optimize your system's performance.

The following worksheet and cabling example shows port pairs being used in the order in which they are listed in the worksheet: 1a/2b, 2a/1d, 1c/2d, and 2c/1b.

Controller-to-Stack Cabling Worksheet for Multipathed Connectivity										
Controller SAS ports	Controllers	Cable to disk shelf IOMs			Stacks					
					1	2	3	4	5	6
		Shelf	IOM	Port	Port pairs					
A and C	1	First	A	1	1a	2a	1c	2c		
	2	First	B	1						
B and D					~~1b~~	~~2b~~	~~1d~~	~~2d~~		
	1	Last	B	3	2b	1d	2d	1b		
	2	Last	A	3						

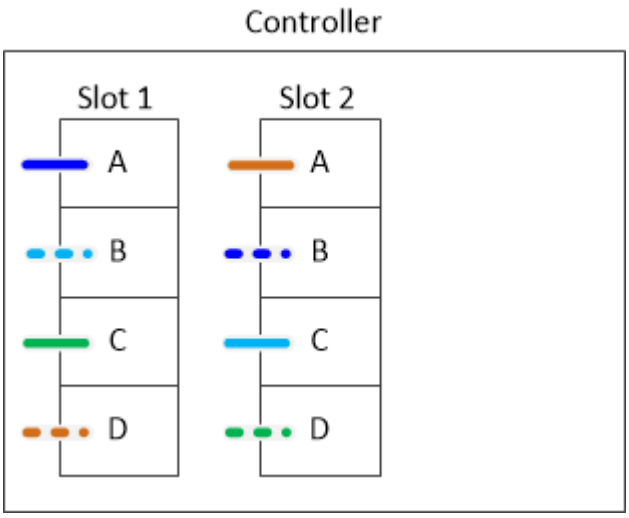

The following worksheet and cabling example shows port pairs being skipped to use every other one in the list: 1a/2b and 1c/2d.

If a third stack is added later, you use the port pair that was skipped.

Controller-to-Stack Cabling Worksheet for Multipathed Connectivity										
Controller SAS ports	Controllers	Cable to disk shelf IOMs			Stacks					
					1	3 ~~2~~	2 ~~3~~	4	5	6
		Shelf	IOM	Port	Port pairs					
A and C	1	First	A	1	1a	2a	1c	2c		
	2	First	B	1						
B and D					~~1b~~	~~2b~~	~~1d~~	~~2d~~		
	1	Last	B	3	2b	1d	2d	1b		
	2	Last	A	3						

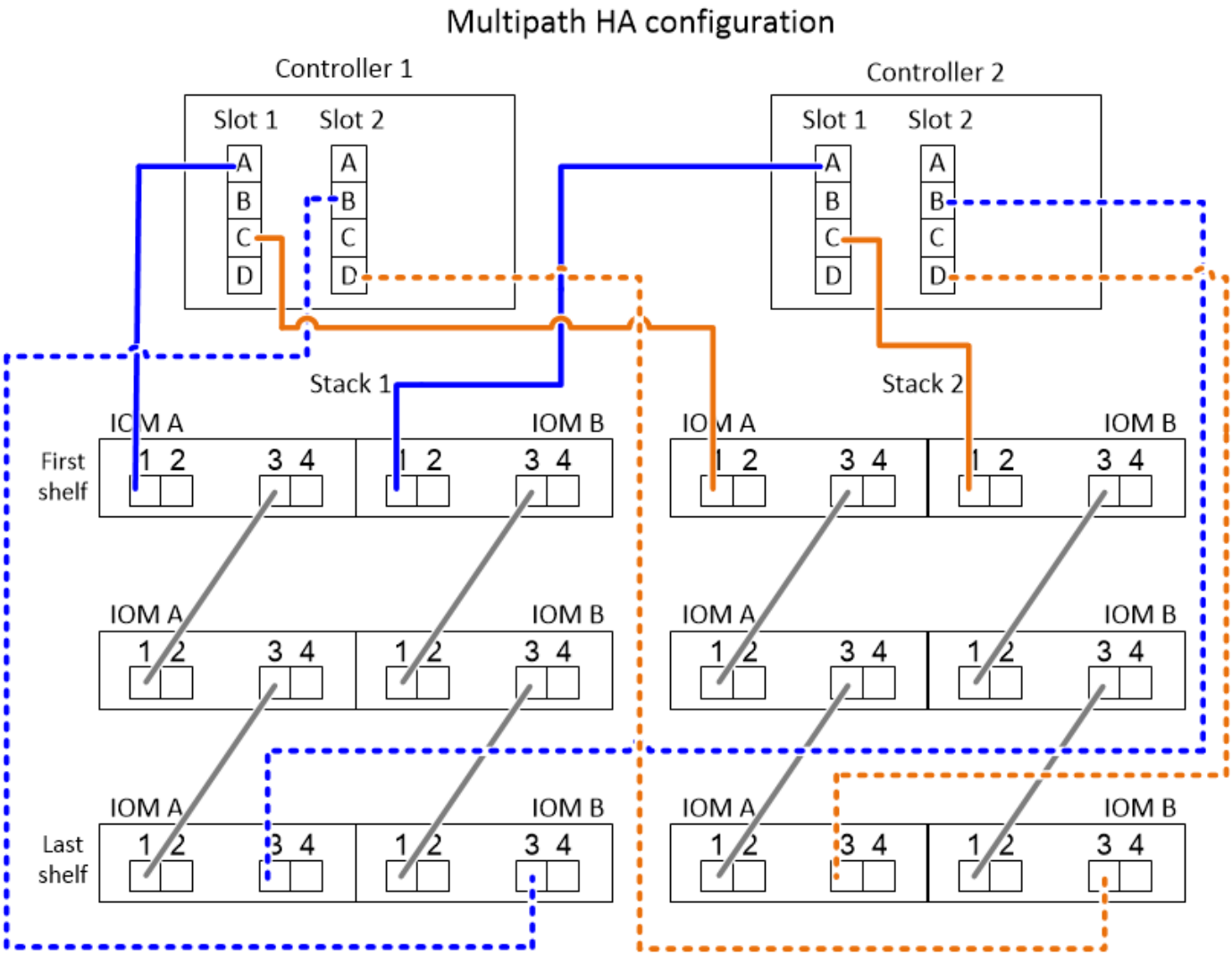

Controller-to-stack cabling worksheets and cabling examples for multipath HA configurations with four onboard SAS ports

You can use the completed controller-to-stack cabling worksheets and cabling examples to cable common multipath HA configurations that have four onboard SAS ports.

Multipath HA with four onboard SAS ports and one single-shelf stack

The following worksheet and cabling example uses port pair 0a/0d:

Controller-to-Stack Cabling Worksheet for Multipathed Connectivity										
Controller SAS ports	Controllers	Cable to disk shelf IOMs			Stacks					
					1	2	3	4	5	6
		Shelf	IOM	Port	Port pairs					
A and C	1	First	A	1	0a	0c				
	2	First	B	1						
B and D					~~0b~~	~~0d~~				
	1	Last	B	3	0d	0b				
	2	Last	A	3						

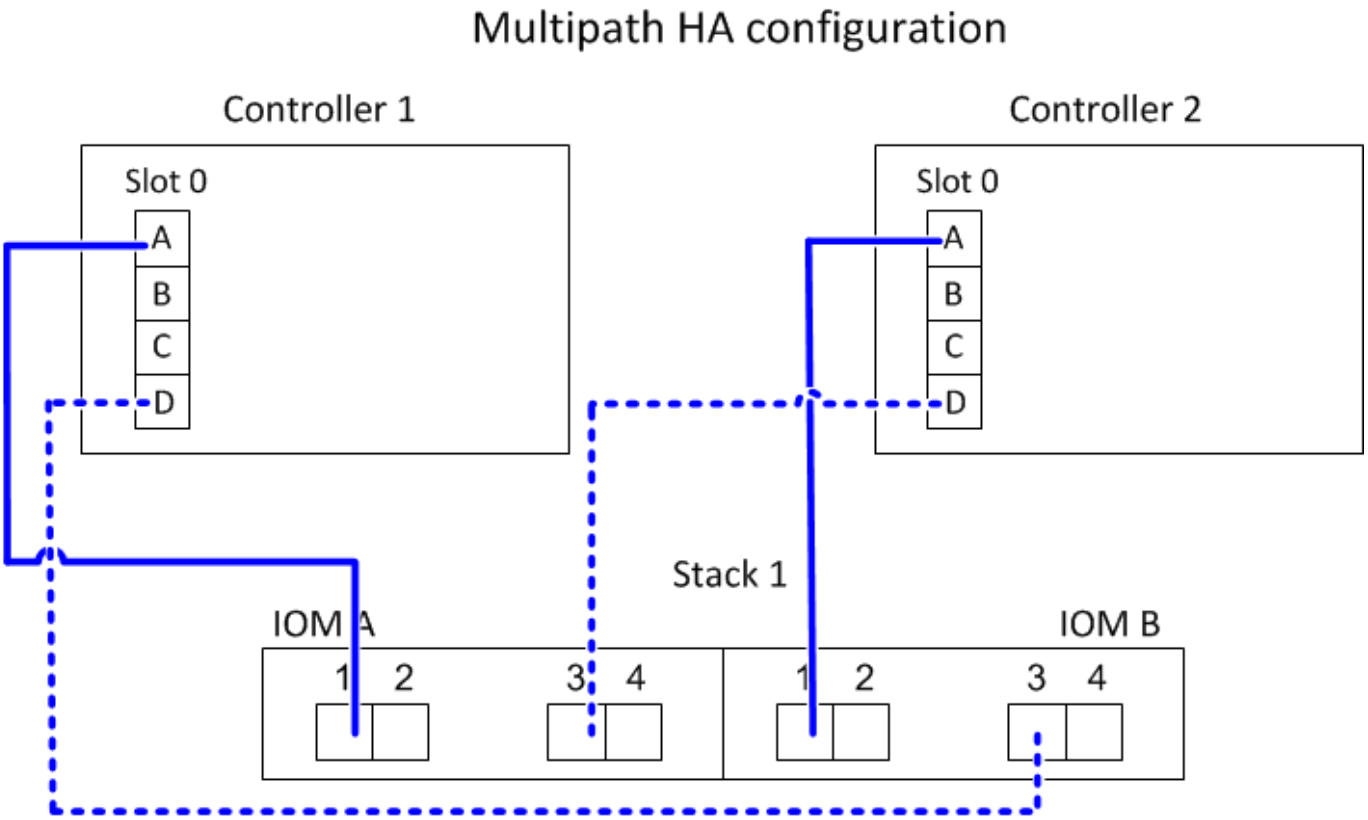

Multipath HA with four onboard SAS ports and two single-shelf stacks

The following worksheet and cabling example uses port pairs 0a/0d and 0c/0b:

Controller-to-Stack Cabling Worksheet for Multipathed Connectivity										
Controller SAS ports	Controllers	Cable to disk shelf IOMs			Stacks					
					1	2	3	4	5	6
		Shelf	IOM	Port	Port pairs					
A and C	1	First	A	1	0a	0c				
	2	First	B	1						
B and D					~~0b~~	~~0d~~				
	1	Last	B	3	0d	0b				
	2	Last	A	3						

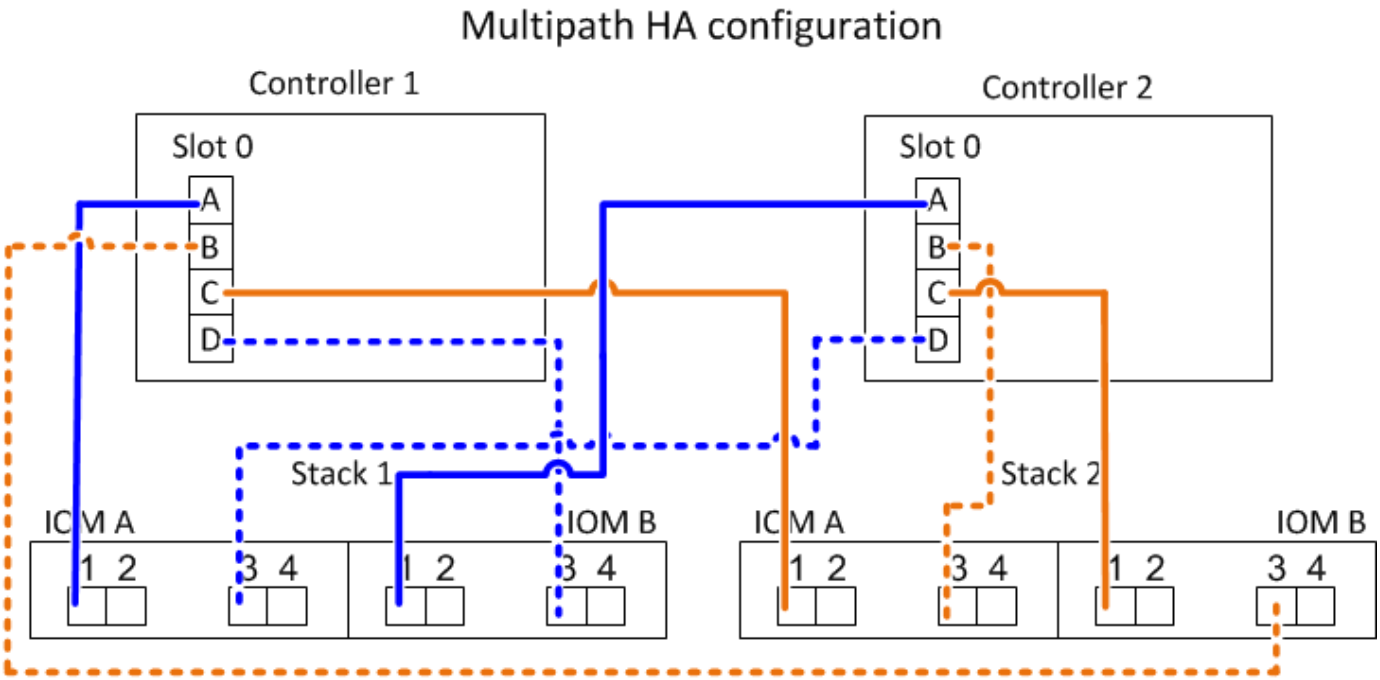

Multipath HA with four onboard SAS ports, a quad-port SAS HBA, and two multi-shelf stacks

Four port pairs are available for this configuration: 0a/1b, 1a/0d, 0c/1d, and 1c/0b. You can cable port pairs in the order in which they are identified (listed in the worksheet) or you can cable every other port pair (skip port pairs).

> When you have more port pairs than you need to cable the stacks in your system, the best practice is to skip port pairs to optimize the SAS ports on your system. By optimizing SAS ports, you optimize your system's performance.

The following worksheet and cabling example shows port pairs being used in the order in which they are listed in the worksheet: 0a/1b, 1a/0d, 0c/1d, and 1c/0b.

Controller-to-Stack Cabling Worksheet for Multipathed Connectivity										
Controller SAS ports	Controllers	Cable to disk shelf IOMs			Stacks					
					1	2	3	4	5	6
		Shelf	IOM	Port	Port pairs					
A and C	1	First	A	1	0a	1a	0c	1c		
	2	First	B	1						
B and D					~~0b~~	~~1b~~	~~0d~~	~~1d~~		
	1	Last	B	3	1b	0d	1d	0b		
	2	Last	A	3						

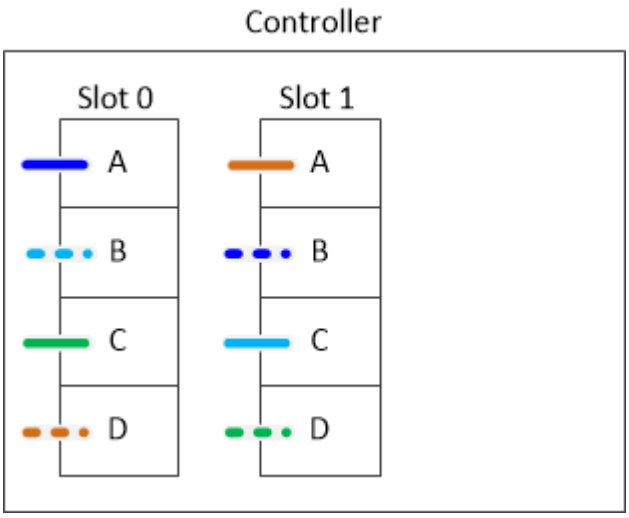

The following worksheet and cabling example shows port pairs being skipped to use every other one in the list: 0a/1b and 0c/1d.

> If a third stack is added later, you use the port pair that was skipped.

Controller-to-Stack Cabling Worksheet for Multipathed Connectivity										
Controller SAS ports	Controllers	Cable to disk shelf IOMs			Stacks					
					1	3 ~~2~~	2 ~~3~~	4	5	6
		Shelf	IOM	Port	Port pairs					
A and C	1	First	A	1	0a	1a	0c	1c		
	2	First	B	1						
B and D					~~0b~~	~~1b~~	~~0d~~	~~1d~~		
	1	Last	B	3	1b	0d	1d	0b		
	2	Last	A	3						

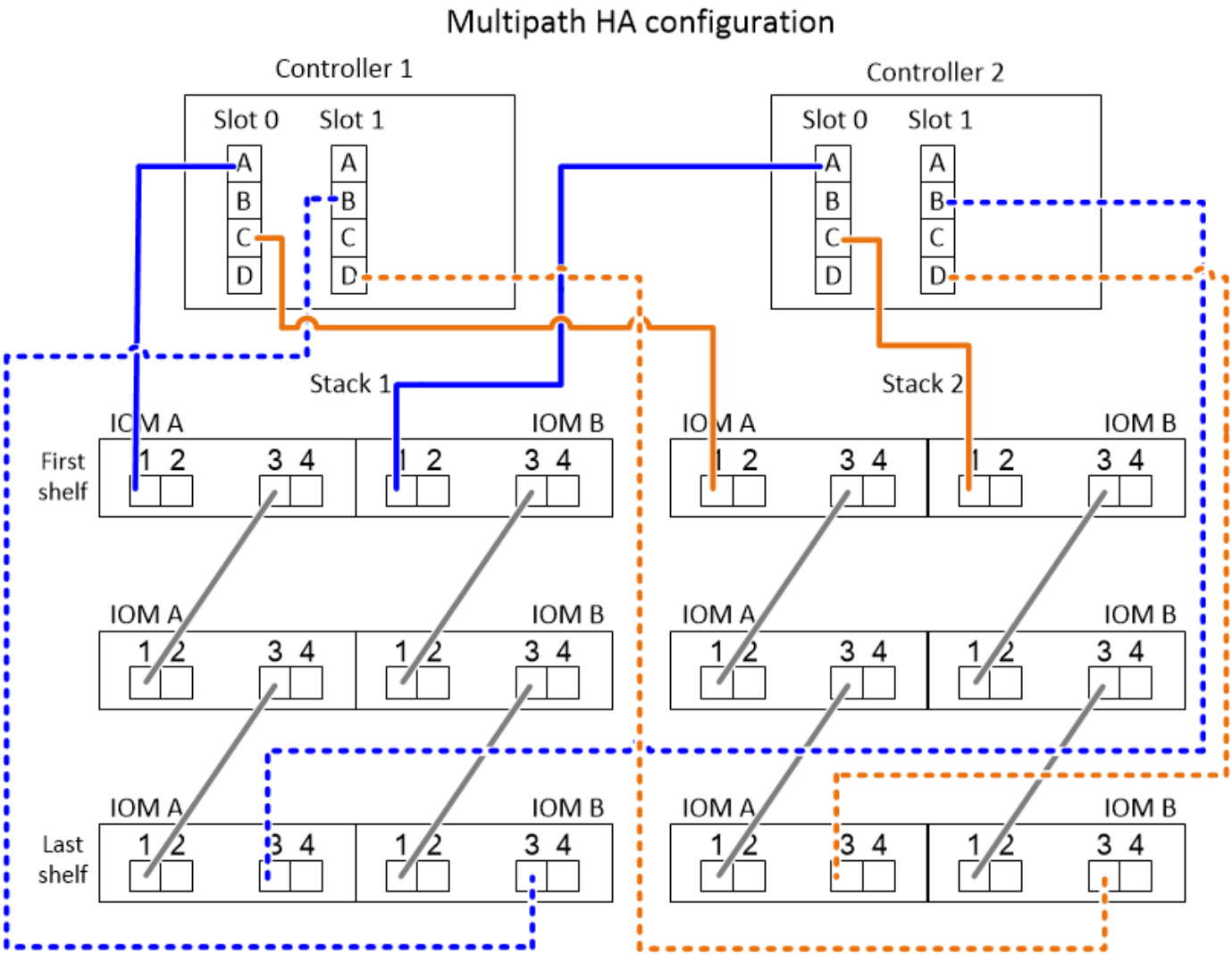

Controller-to-stack cabling worksheets and cabling examples for platforms with internal storage - shelves with IOM12/IOM12B modules

You can use the completed controller-to-stack cabling worksheets and cabling examples to cable platforms with internal storage.

> This information does not apply to FAS25XX platforms.

- If needed, you can refer to SAS cabling rules and concepts for information about supported configurations, shelf-to-shelf connectivity, and controller-to-shelf connectivity.
- Cabling examples show controller-to-stack cables as solid or dashed to distinguish controller 0b/0b1 port connections from controller 0a port connections.

Controller-to-stack cable type key: AFF and FAS platforms with onboard storage (except FAS25XX)	
Cable Type	**Description**
———	• Connects controller **0b** or **0b1** port to the logical **last** disk shelf in the stack • The **primary** path from a controller to the stack The internal storage connection
— — — —	• Connects controller **0a** port to the logical **first** disk shelf in the stack • The **secondary** path from a controller to the stack The internal HBA connection

- Cabling examples show controller-to-stack connections and shelf-to-shelf connections in two different colors to distinguish connectivity through IOM A (domain A) and IOM B (domain B).

Cable color key: AFF and FAS platforms with onboard storage (except FAS25XX)		
Cable Color		**Connects...**
	Light blue	IOM A (domain A)
	Purple	IOM B (domain B)

FAS2800 platform in a multipath HA configuration with no external shelves

The following example shows that no cabling is needed to acheive multipath HA connectivity:

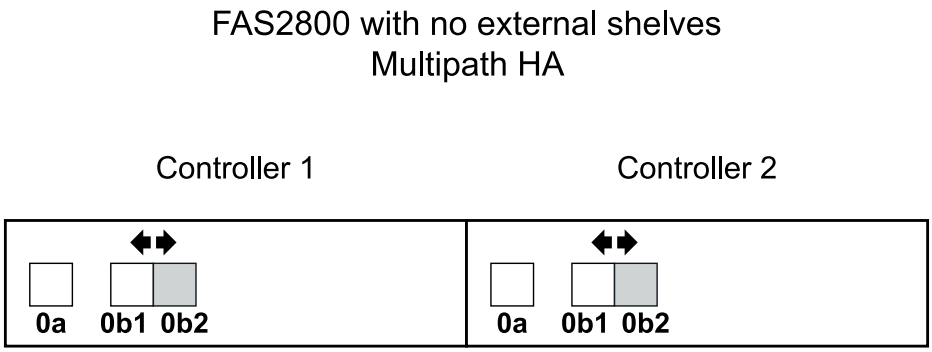

FAS2800 platform in a tri-path HA configuration with no external shelves

The following cabling example shows required cabling between the two controllers to achieve tri-path connectivity:

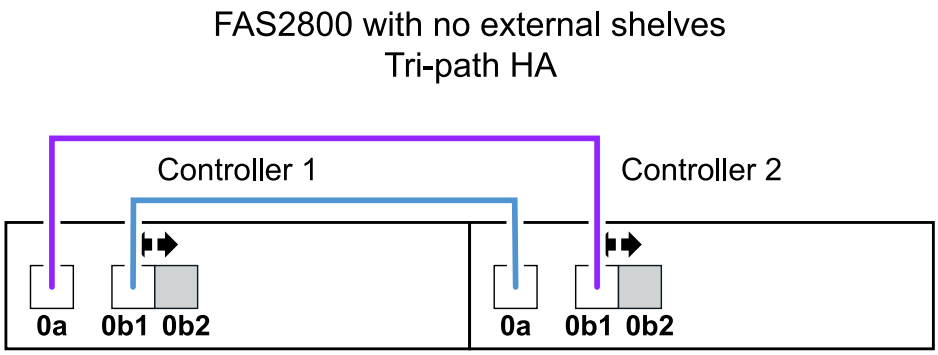

FAS2800 platform in a tri-path HA configuration with one multi-shelf stack

The following worksheet and cabling example uses port pair 0a/0b1:

Controller-to-stack cabling worksheet: FAS2800 platform										
Controller SAS ports	Controllers	Cable to disk shelf IOMs			Stacks					
					1	2	3	4	5	6
		Shelf	IOM	Port	Port pairs					
A and C	1	First	B	1	0a					
	2	First	A	1						
B and D	1	Last	A	3	0b1					
	2	Last	B	3						

FAS2800 platform
Tri-path HA configuration

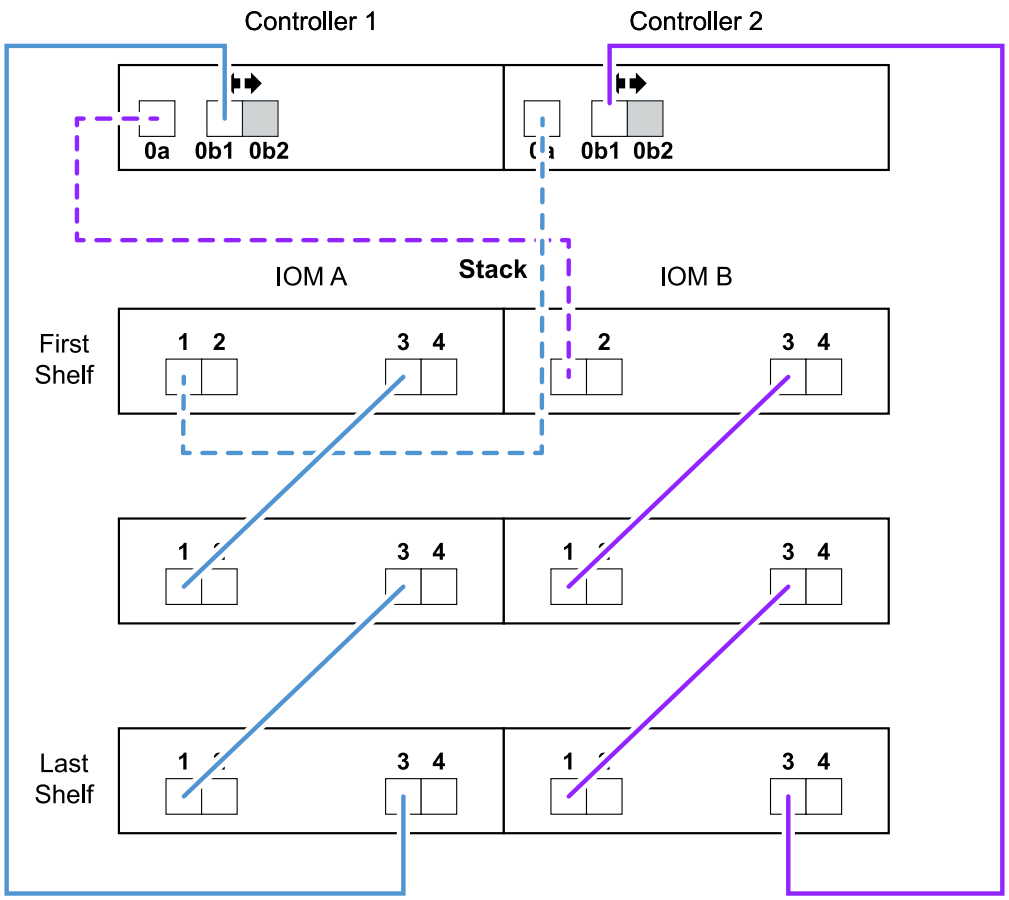

Platforms with internal storage in a multipath HA configuration with one multi-shelf stack

The following worksheet and cabling example uses port pair 0a/0b:

This section does not apply to FAS2800 or FAS25XX systems.

Controller-to-stack cabling worksheet: AFF and FAS platforms with onboard storage										
Controller SAS ports	**Controllers**	**Cable to disk shelf IOMs**			**Stacks**					
					1	2	3	4	5	6
		Shelf	**IOM**	**Port**		**Port pairs**				
A and C	1	First	B	1	0a					
	2	First	A	1						
B and D	1	Last	A	3	0b					
	2	Last	B	3						

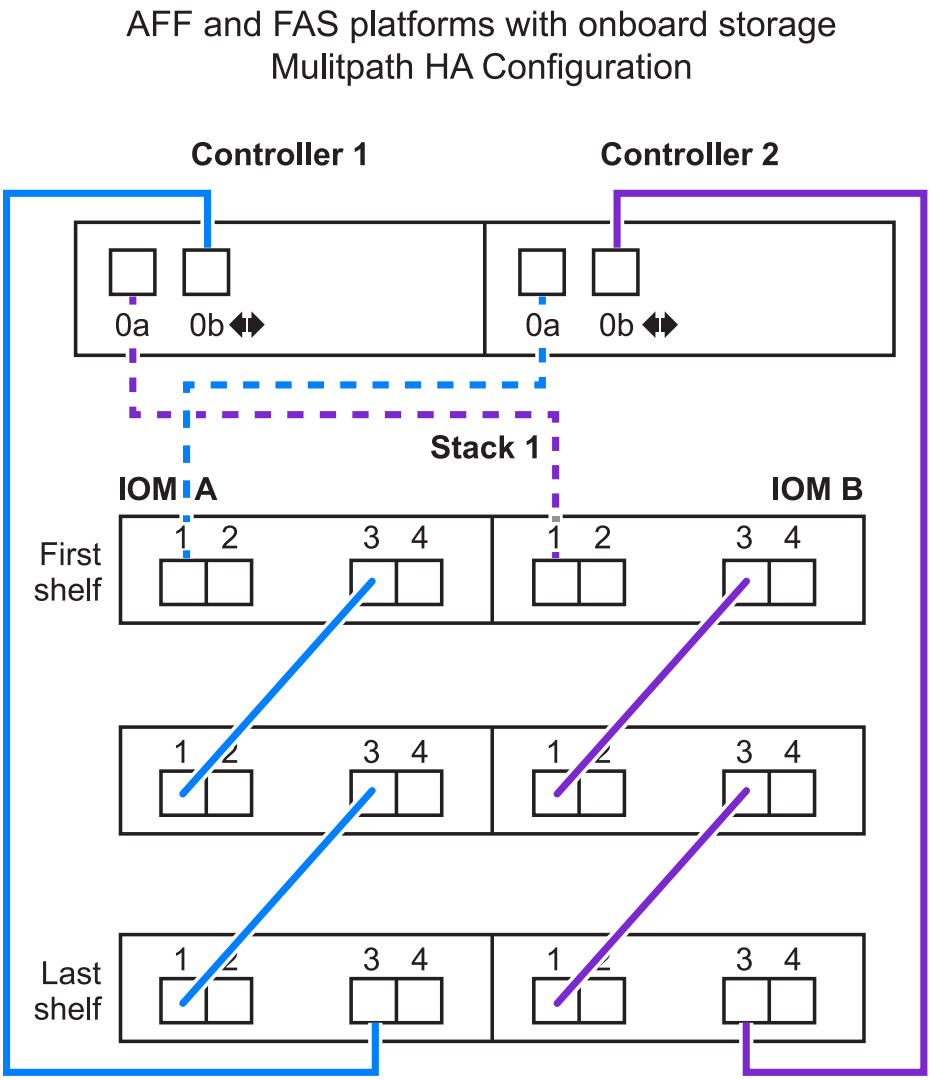

FAS2600 series multipath configuration with one multi-shelf stack

The following worksheets and cabling examples use port pair 0a/0b.

In this example, the controller is installed in slot A of the chassis. When a controller is located in slot A of the chassis, its internal storage port (0b) is in domain A (IOM A); therefore, port 0b must connect to domain A (IOM A) in the stack.

Controller-to-Stack Cabling Worksheet (FAS2600 series)										
Controller SAS ports	Controllers	Cable to disk shelf IOMs			Stacks					
					1	2	3	4	5	6
		Shelf	IOM	Port		Port pairs				
A and C	1	First	B	1	0a					
	~~2~~	~~First~~	~~A~~	~~1~~						
B and D	1	Last	A	3	0b					
	~~2~~	~~Last~~	~~B~~	~~3~~						

FAS2600 series multipath configuration

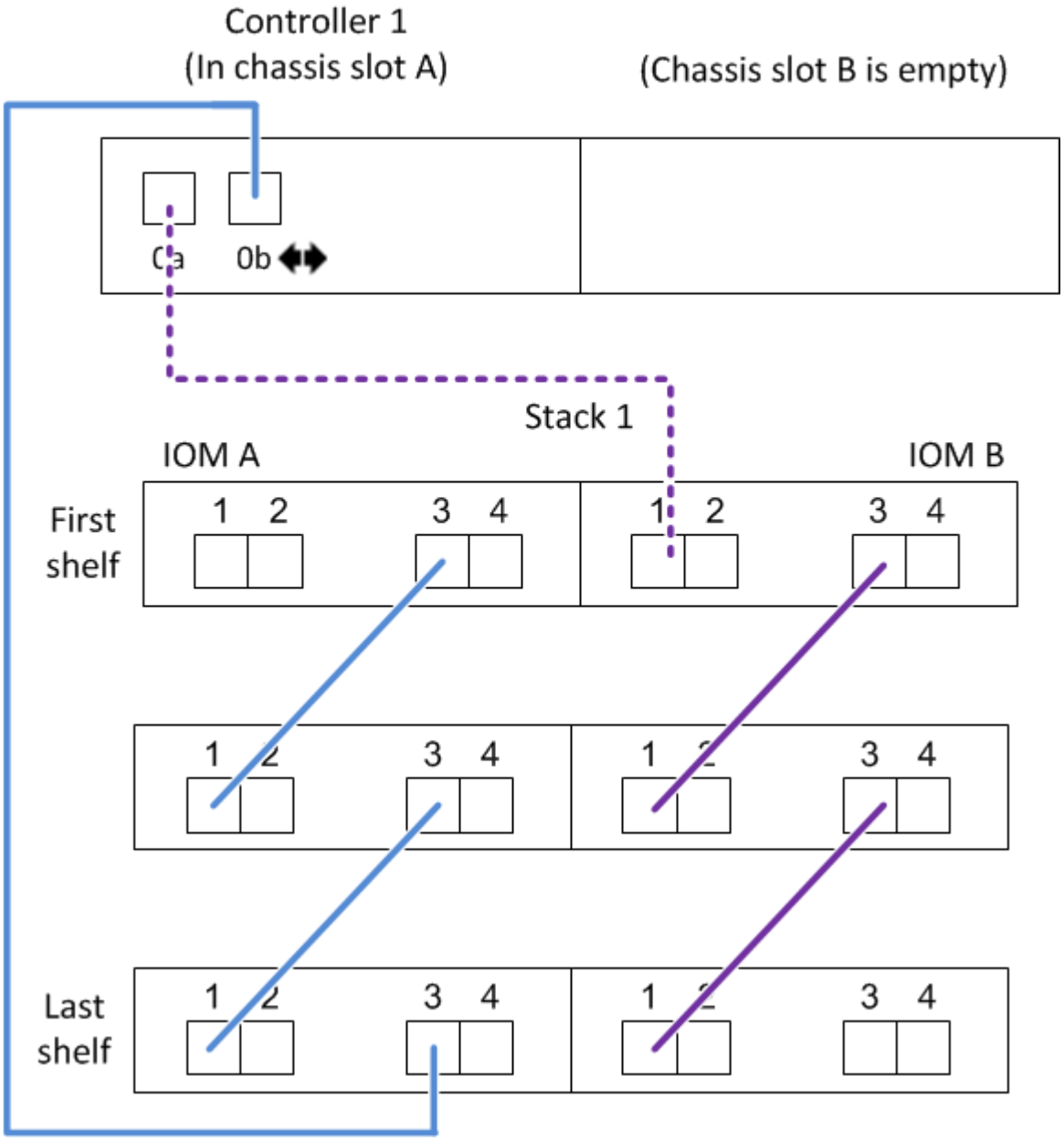

In this example, the controller is installed in slot B of the chassis. When a controller is located in slot B of the chassis, its internal storage port (0b) is in domain B (IOM B); therefore, port 0b must connect to domain B (IOM B) in the stack.

Controller-to-Stack Cabling Worksheet (FAS2600 series)										
Controller SAS ports	Controllers	Cable to disk shelf IOMs			Stacks					
					1	2	3	4	5	6
		Shelf	IOM	Port		Port pairs				
A and C	1	First	B	1	0a					
	~~2~~	~~First~~	~~A~~	~~1~~						
B and D	1	Last	A	3	0b					
	~~2~~	~~Last~~	~~B~~	~~3~~						

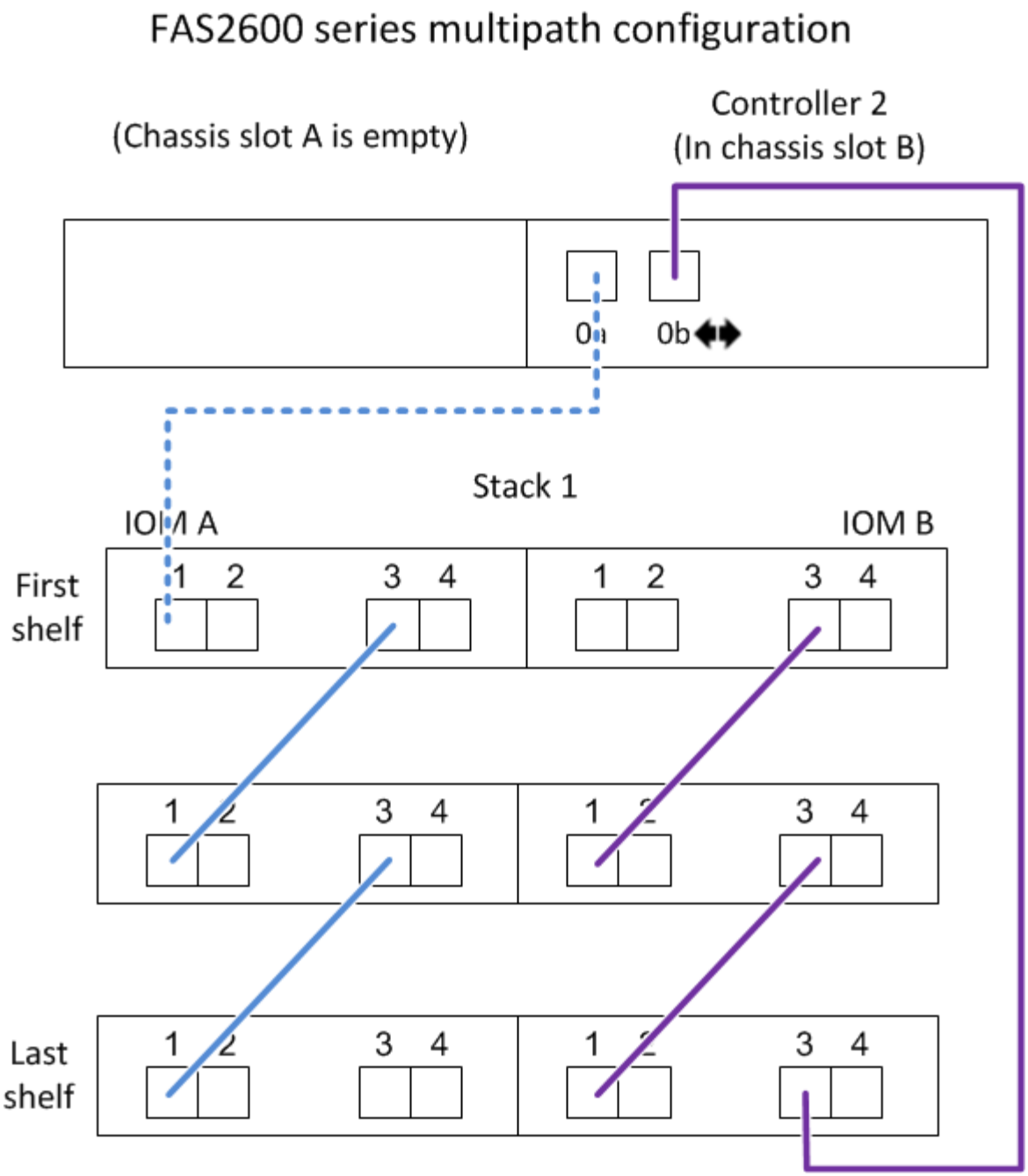

Controller-to-stack cabling worksheet and cabling example for a quad-path HA configuration with two quad-port SAS HBAs - shelves with IOM12/IOM12B modules

You can use the completed controller-to-stack cabling worksheet and cabling example to cable a quad-path HA configuration that has two quad-port SAS HBAs.

- If needed, you can refer to SAS cabling rules for information about supported configurations, the controller slot numbering convention, shelf-to-shelf connectivity, and controller-to-shelf connectivity (including the use of port pairs).
- If needed, you can refer to How to read a worksheet to cable controller-to-stack connections for quad-pathed connectivity.
- The cabling example shows controller-to-stack cables as solid or dashed to distinguish controller A and C port connections from controller B and D port connections.

Controller-to-Stack Cable Type Key	
Cable Type	Description
	▪ Connects controller **A** and **C** ports to the logical **first** disk shelf in a stack ▪ The **primary** path from a controller to a stack
	▪ Connects controller **B** and **D** ports to the logical **last** disk shelf in a stack ▪ The **secondary** path from a controller to a stack

- Cables in the cabling examples and their corresponding port pairs in the worksheets are color-coded to distinguish connectivity to each stack in the HA pair.

Controller-to-Stack Cable Color Key			
Cable Color		Connects to...	From...
	Dark blue	Stack 1	Each controller by a unique port pair
	Orange	Stack 2	

- The cabling example visually distinguishes the two sets of multipathed cabling needed to achieve quad-pathed connectivity for each controller to each stack in an HA pair or single-controller configuration.

  The first set of multipathed cabling is referred to as “multipathed”. The second set of multipathed cabling is referred to as “quad-pathed”. The second set of cabling is referred to as “quad-pathed” because completing this set of cabling gives you the quad-pathed connectivity.

Controller-to-Stack Quad-Pathed Connectivity Key			
Quad-pathed connectivity consists of two sets of cabling		Shown by color-coded ports on controllers and IOMs	Description
Set 1	Multipathed	No color	Ports (on controllers and IOMs) cabled with multipathed connectivity are shown without a color.
Set 2	Quad-pathed	The cable color associated with the applicable stack	Ports (on controllers and IOMs) cabled with quad-pathed connectivity are the same color as the cables connecting the stack, as shown in the “Controller-to-Stack Cable Color Key”.

- The worksheet example shows port pairs designated for multipathed cabling or quad-pathed cabling to the applicable stack.

  Each port pair designated for multipathed cabling is encircled by an oval that is the color associated with the stack it is cabled to. Each port pair designated for quad-pathed cabling is encircled by a rectangle that is the color associated with the stack it is cabled to.

Quad-path HA with two quad-port SAS HBAs and two multi-shelf stacks

The following worksheet and cabling example uses port pairs 1a/2b (multipathed) and 2a/1d (quad-pathed) for stack 1, and port pairs 1c/2d (multipathed) and 2c/1b (quad-pathed) for stack2.

Controller-to-Stack Cabling Worksheet for Quad-Pathed Connectivity									
Controller SAS ports	Controllers	Cable to disk shelf IOMs				Stacks			
		Shelf	IOM	Port		1		2	
				Multipathed	Quad-pathed	Port pairs			
A and C	1	First	A	1	2	1a	2a	1c	2c
	2	First	B	1	2				
B and D						~~1b~~	~~2b~~	~~1d~~	~~2d~~
	1	Last	B	3	4	2b	1d	2d	1b
	2	Last	A	3	4				

Quad-path HA configuration

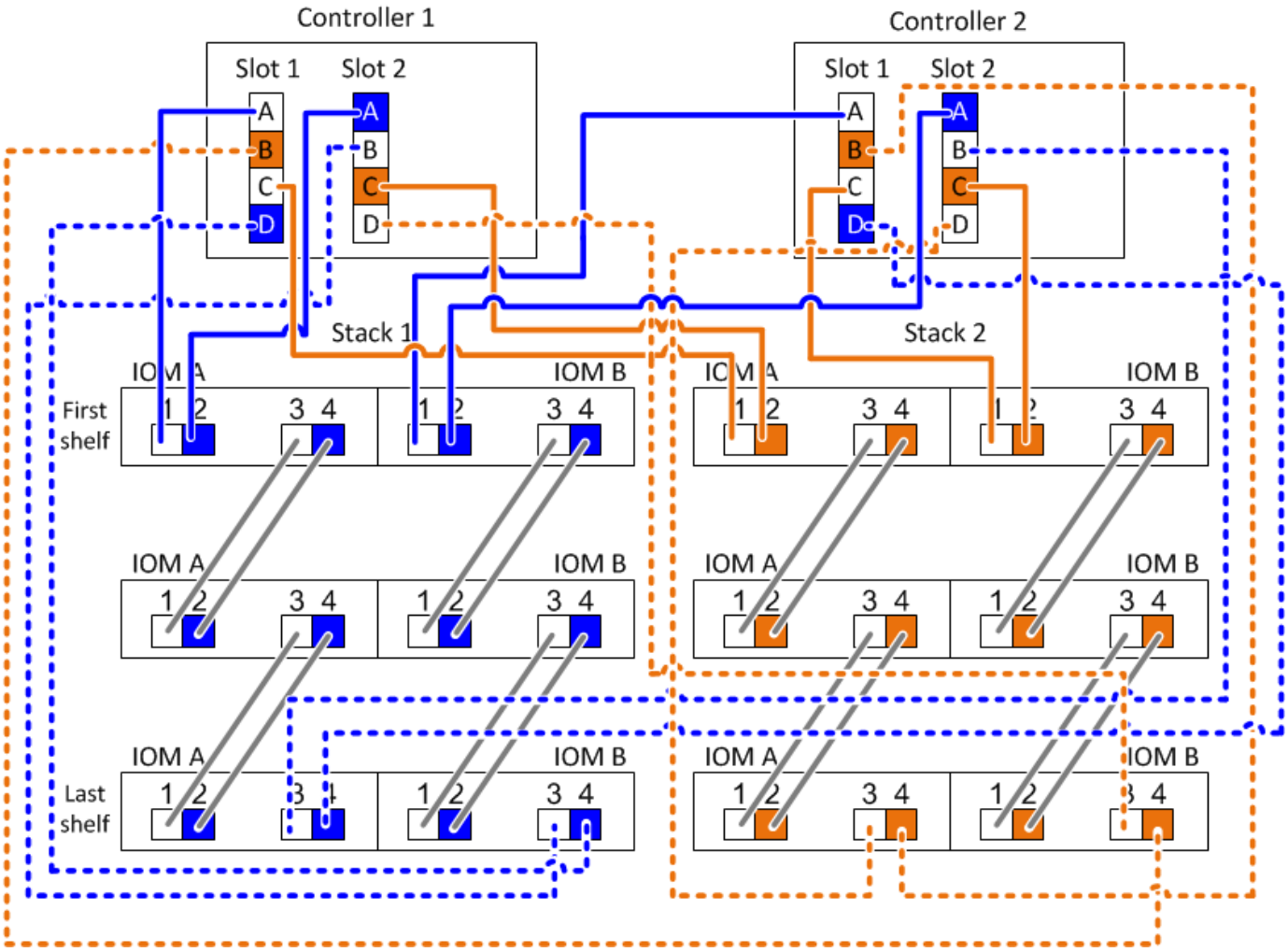

Controller-to-stack cabling worksheet template for multipathed connectivity - shelves with IOM12/IOM12B modules

By completing the worksheet template, you can define the controller SAS port pairs you can use to cable controllers to stacks of disk shelves with IOM12/IOM12B modules to achieve multipathed connectivity in an HA pair or single-controller configuration. You can also use the completed worksheet to walk yourself through cabling the multipathed connections for your configuration.

Before you begin

If you have a platform with internal storage, use the following worksheet:

Controller-to-stack cabling worksheets and cabling examples for platforms with internal storage

About this task

- This procedure and worksheet template is applicable to cabling multipathed connectivity for a multipath HA or multipath configuration with one or more stacks.

  Examples of completed worksheets are provided for multipath HA and multipath configurations.

  A configuration with two quad-port SAS HBAs and two stacks of disk shelves with IOM12/IOM12B modules is used for the worksheet examples.

- The worksheet template allows for up to six stacks; you need to add more columns if needed.
- If needed, you can refer to the SAS cabling rules and concepts for information about supported configurations, the controller slot numbering convention, shelf-to-shelf connectivity, and controller-to-shelf connectivity (including use of port pairs).
- If needed, after you complete the worksheet, you can refer to How to read a worksheet to cable controller-to-stack connections for multipathed connectivity

Controller-to-Stack Cabling Worksheet Multipathed Connectivity											
Controller SAS ports	Controllers	Cable to disk shelf IOMs			Stacks						
					1	2	3	4	5	6
		Shelf	IOM	Port	Port pairs					
A and C	1	First	A	1						
	2	First	B	1						
B and D										
	1	Last	B	3						
	2	Last	A	3						

Steps

1. In the boxes above the gray boxes, list all SAS A ports on your system, and then all SAS C ports on your system in sequence of slots (0, 1, 2, 3, and so on).

   For example: 1a, 2a, 1c, 2c

2. In the gray boxes, list all SAS B ports on your system, and then all SAS D ports on your system in sequence of slots (0, 1, 2, 3 and so on).

   For example: 1b, 2b, 1d, 2d

3. In the boxes below the gray boxes, rewrite the D and B port list so that the first port in the list is moved to the end of the list.

   For example: 2b, 1d, 2d, 1b

4. Circle (designate) a port pair for each stack.

   When all port pairs are being used to cable the stacks in your system, circle port pairs in the order in which they are defined (listed) in the worksheet.

   For example, in a multipath HA configuration with eight SAS ports and four stacks, port pair 1a/2b is cabled to stack 1, port pair 2a/1d is cabled to stack 2, port pair 1c/2d is cabled to stack3, and port pair 2c/1b is cabled to stack 4.

Controller-to-Stack Cabling Worksheet for Multipathed Connectivity										
Controller SAS ports	Controllers	Cable to disk shelf IOMs			Stacks					
					1	2	3	4	5	6
		Shelf	IOM	Port	Port pairs					
A and C	1	First	A	1	1a	2a	1c	2c		
	2	First	B	1						
B and D					~~1b~~	~~2b~~	~~1d~~	~~2d~~		
	1	Last	B	3	2b	1d	2d	1b		
	2	Last	A	3						

   When not all port pairs are needed to cable the stacks in your system, skip port pairs (use every other port pair).

   For example, in a multipath HA configuration with eight SAS ports and two stacks, port pair 1a/2b is cabled to stack 1 and port pair 1c/2d is cabled to stack 2. If two additional stacks are hot-added later, port pair 2a/1d is cabled to stack 3 and port pair 2c/1b is cabled to stack 4.

   > When you have more port pairs than you need to cable the stacks in your system, the best practice is to skip port pairs to optimize the SAS ports on your system. By optimizing SAS ports, you optimize your system's performance.

Controller-to-Stack Cabling Worksheet Multipathed Connectivity										
Controller SAS ports	Controllers	Cable to disk shelf IOMs			Stacks					
					1	3 ~~2~~	2 ~~3~~	4	5	6
		Shelf	IOM	Port	Port pairs					
A and C	1	First	A	1	1a	2a	1c	2c		
	2	First	B	1						
B and D					~~1b~~	~~2b~~	~~1d~~	~~2d~~		
	1	Last	B	3	2b	1d	2d	1b		
	2	Last	A	3						

You can use your completed worksheet to cable your system.

5. If you have a single-controller (multipath) configuration, cross out the information for controller 2.

Controller-to-Stack Cabling Worksheet Multipathed Connectivity										
Controller SAS ports	Controllers	Cable to disk shelf IOMs			Stacks					
					1	2	3	4	5	6
		Shelf	IOM	Port	Port pairs					
A and C	1	First	A	1	1a	2a	1c	2c		
	~~2~~	~~First~~	~~B~~	~~1~~						
B and D					~~1b~~	~~2b~~	~~1d~~	~~2d~~		
	1	Last	B	3	2b	1d	2d	1b		
	~~2~~	~~Last~~	~~A~~	~~3~~						

You can use your completed worksheet to cable your system.

Controller-to-stack cabling worksheet template for quad-pathed connectivity - shelves with IOM1/IOM12B2 modules

By completing the worksheet template, you can define the controller SAS port pairs you can use to cable controllers to stacks of disk shelves with IOM12/IOM12B modules to achieve quad-pathed connectivity in an HA pair or single-controller configuration. You can also use the completed worksheet to walk yourself through cabling the quad-pathed connections for your configuration.

About his task

- This procedure and worksheet template is applicable to cabling quad-pathed connectivity for a quad-path HA or quad-path configuration with one or more stacks.

  Examples of completed worksheets are provided for quad-path HA and quad-path configurations.

A configuration with two quad-port SAS HBAs and two stacks of disk shelves with IOM12/IOM12B modules is used for the worksheet examples.

- The worksheet template allows for up to two stacks; you need to add more columns if needed.
- Quad-pathed connectivity for controller-to-stack connections consists of two sets of multipathed cabling: the first set of cabling is referred to as “multipathed”; the second set of cabling is referred to as “quad-pathed”.

  The second set of cabling is referred to as “quad-pathed” because completing this set of cabling gives you the quad-pathed connectivity from a controller to a stack in an HA pair or single-controller configuration.

- Disk shelf IOM ports 1 and 3 are always used for multipathed cabling and IOM ports 2 and 4 are always used for quad-pathed cabling, as designated by the worksheet column headings.
- In the worksheet examples, port pairs are designated for multipathed cabling or quad-pathed cabling to the applicable stack.

  Each port pair designated for multipathed cabling is encircled by an oval that is the color associated with the stack it is cabled to. Each port pair designated for quad-pathed cabling is encircled by a rectangle that is the color associated with the stack it is cabled to. Stack 1 is associated with the color blue; stack 2 is associated with the color orange.

- If needed, you can refer to SAS cabling rules and concepts for information about the controller slot numbering convention, shelf-to-shelf connectivity, and controller-to-shelf connectivity (including the use of port pairs).
- If needed, after you complete the worksheet, you can refer to How to read a worksheet to cable controller-to-stack connections for quad-pathed connectivity.

Controller-to-Stack Cabling Worksheet for Quad-Pathed Connectivity									
Controller SAS ports	Controllers	Cable to disk shelf IOMs				Stacks			
		Shelf	IOM	Port		1		2	
				Multipathed	Quad-pathed	Port pairs			
A and C	1	First	A	1	2				
	2	First	B	1	2				
B and D									
	1	Last	B	3	4				
	2	Last	A	3	4				

Steps

1. In the boxes above the gray boxes, list all SAS A ports on your system, and then all SAS C ports on your system in sequence of slots (0, 1, 2, 3, and so on).

   For example: 1a, 2a, 1c, 2c

2. In the gray boxes, list all SAS B ports on your system, and then all SAS D ports on your system in sequence of slots (0, 1, 2, 3 and so on).

For example: 1b, 2b, 1d, 2d

3. In the boxes below the gray boxes, rewrite the D and B port list so that the first port in the list is moved to the end of the list.

   For example: 2b, 1d, 2d, 1b

4. Identify the two sets of port pairs to connect to stack 1 by drawing an oval around the first set of port pairs and a rectangle around the second set of port pairs.

   Both sets of cabling are needed to achieve quad-pathed connectivity from each controller to stack 1 in your HA pair or single-controller configuration.

   The following example uses port pair 1a/2b for the multipathed cabling and port pair 2a/1d for the quad-pathed cabling to stack 1.

Controller-to-Stack Cabling Worksheet for Quad-Pathed Connectivity									
Controller SAS ports	Controllers	Cable to disk shelf IOMs				Stacks			
		Shelf	IOM	Port		1		2	
				Multipathed	Quad-pathed	Port pairs			
A and C	1	First	A	1	2	1a	2a	1c	2c
	2	First	B	1	2				
B and D						~~1b~~	~~2b~~	~~1d~~	~~2d~~
	1	Last	B	3	4	2b	1d	2d	1b
	2	Last	A	3	4				

5. Identify the two sets of port pairs to connect to stack 2 by drawing an oval around the first set of port pairs and a rectangle around the second set of port pairs.

   Both sets of cabling are needed to achieve quad-pathed connectivity from each controller to stack 1 in your HA pair or single-controller configuration.

   The following example uses port pair 1c/2d for the multipathed cabling and port pair 2c/1b for the quad-pathed cabling to stack 2.

Controller-to-Stack Cabling Worksheet for Quad-Pathed Connectivity									
Controller SAS ports	Controllers	Cable to disk shelf IOMs				Stacks			
		Shelf	IOM	Port		1		2	
				Multipathed	Quad-pathed	Port pairs			
A and C	1	First	A	1	2	1a	2a	1c	2c
	2	First	B	1	2				
B and D						~~1b~~	~~2b~~	~~1d~~	~~2d~~
	1	Last	B	3	4	2b	1d	2d	1b
	2	Last	A	3	4				

6. If you have a quad-path (single-controller) configuration, cross out the information for controller 2; you only need controller 1 information to cable the controller-to-stack connections.

   The following example shows that the information for controller 2 is crossed out.

Controller-to-Stack Cabling Worksheet for Quad-Pathed Connectivity									
Controller SAS ports	Controllers	Cable to disk shelf IOMs				Stacks			
		Shelf	IOM	Port		1		2	
				Multipathed	Quad-pathed	Port pairs			
A and C	1	First	A	1	2	1a	2a	1c	2c
	~~2~~	~~First~~	~~B~~	~~1~~	~~2~~				
B and D						~~1b~~	~~2b~~	~~1d~~	~~2d~~
	1	Last	B	3	4	2b	1d	2d	1b
	~~2~~	~~Last~~	~~A~~	~~3~~	~~4~~				

How to read a worksheet to cable controller-to-stack connections for multipathed connectivity - shelves with IOM12/IOM12B modules

You can use this example to guide you through how to read and apply a completed worksheet to cable controller-to-stack connections for disk shelves with IOM12/IOM12B modules for multipathed connectivity.

Before you begin

If you have a platform with internal storage, use the following worksheet:

Controller-to-stack cabling worksheets and cabling examples for platforms with internal storage

About this task

- This procedure references the following worksheet and cabling example to demonstrate how to read a worksheet to cable controller-to-stack connections.

The configuration used in this example is a multipath HA configuration with two quad-port SAS HBAs (eight SAS ports) on each controller and two stacks of disk shelves with IOM12/IOM12B modules. Port pairs are cabled by skipping every other port pair in the worksheet.

> When you have more port pairs than you need to cable the stacks in your system, the best practice is to skip port pairs to optimize the SAS ports on your system. By optimizing SAS ports, you optimize your system's performance.

- If you have a single-controller configuration, skip substeps b and d for cabling to a second controller.
- If needed, you can refer to SAS cabling rules and concepts for information about the controller slot numbering convention, shelf-to-shelf connectivity, and controller-to-shelf connectivity (including the use of port pairs).

The port pairs are cabled using every other port pair in the worksheet: 1a/2b and 1c/2d.

Controller-to-Stack Cabling Worksheet Multipathed Connectivity										
Controller SAS ports	Controllers	Cable to disk shelf IOMs			Stacks					
					1	3 ~~2~~	2 ~~3~~	4	5	6
		Shelf	IOM	Port	Port pairs					
A and C	1	First	A	1	1a	2a	1c	2c		
	2	First	B	1						
B and D					~~1b~~	~~2b~~	~~1d~~	~~2d~~		
	1	Last	B	3	2b	1d	2d	1b		
	2	Last	A	3						

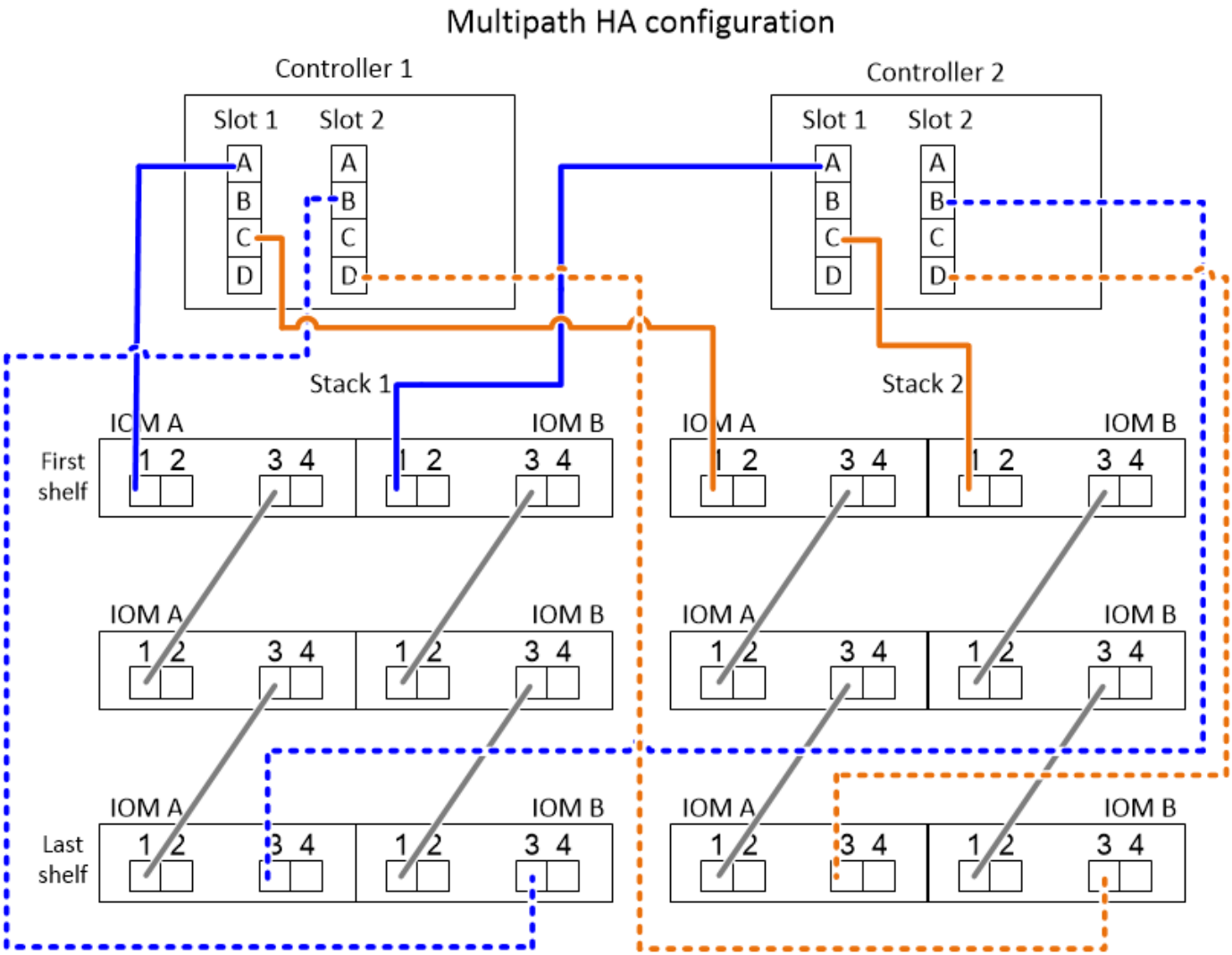

Steps

1. Cable port pair 1a/2b on each controller to stack 1:
   a. Cable controller 1 port 1a to stack 1, first shelf IOM A port 1.
   b. Cable controller 2 port 1a to stack 1, first shelf IOM B port 1.
   c. Cable controller 1 port 2b to stack 1, last shelf IOM B port 3.
   d. Cable controller 2 port 2b to stack 1, last shelf IOM A port 3.
2. Cable port pair 1c/2d on each controller to stack 2:
   a. Cable controller 1 port 1c to stack 2, first shelf IOM A port 1.
   b. Cable controller 2 port 1c to stack 2, first shelf IOM B port 1.
   c. Cable controller 1 port 2d to stack 2, last shelf IOM B port 3.
   d. Cable controller 2 port 2d to stack 2, last shelf IOM A port 3.

How to read a worksheet to cable controller-to-stack connections for quad-pathed connectivity - shelves with IOM12/IOM12B modules

You can use this example to guide you through how to read and apply a completed worksheet to cable stacks of disk shelves with IOM12/IOM12B modules for quad-pathed

connectivity.

About this task

- This procedure references the following worksheet and cabling example to demonstrate how to read a worksheet to cable controller-to-stack connections.

  The configuration used in this example is a quad-path HA configuration with two quad-port SAS HBAs on each controller and two stacks of disk shelves with IOM12 modules.

- If you have a single-controller configuration, skip substeps b and d for cabling to a second controller.
- If needed, you can refer to SAS cabling rules and concepts for information about the controller slot numbering convention, shelf-to-shelf connectivity, and controller-to-shelf connectivity (including the use of port pairs).

Controller-to-Stack Cabling Worksheet for Quad-Pathed Connectivity									
Controller SAS ports	Controllers	Cable to disk shelf IOMs				Stacks			
		Shelf	IOM	Port		1		2	
				Multipathed	Quad-pathed	Port pairs			
A and C	1	First	A	1	2	1a	2a	1c	2c
	2	First	B	1	2				
B and D						~~1b~~	~~2b~~	~~1d~~	~~2d~~
	1	Last	B	3	4	2b	1d	2d	1b
	2	Last	A	3	4				

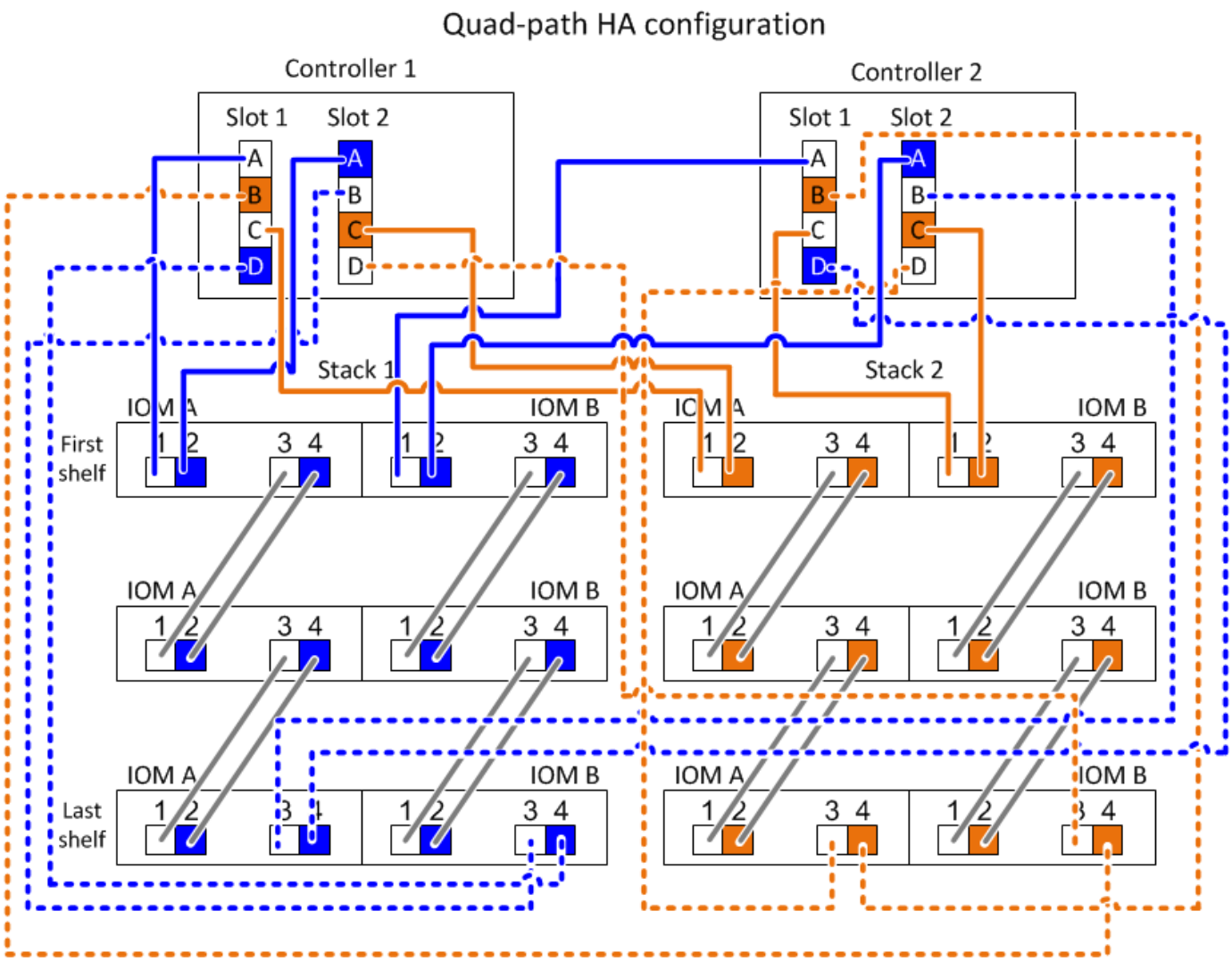

Steps

1. Cable port pair 1a/2b on each controller to stack 1:

   This is the multipathed cabling for stack 1.

   a. Cable controller 1 port 1a to stack 1, first shelf IOM A port 1.
   b. Cable controller 2 port 1a to stack 1, first shelf IOM B port 1.
   c. Cable controller 1 port 2b to stack 1, last shelf IOM B port 3.
   d. Cable controller 2 port 2b to stack 1, last shelf IOM A port 3.

2. Cable port pair 2a/1d on each controller to stack 1:

   This is the quad-pathed cabling for stack 1. Once completed, stack 1 has quad-pathed connectivity to each controller.

   a. Cable controller 1 port 2a to stack 1, first shelf IOM A port 2.
   b. Cable controller 2 port 2a to stack 1, first shelf IOM B port 2.
   c. Cable controller 1 port 1d to stack 1, last shelf IOM B port 4.
   d. Cable controller 2 port 1d to stack 1, last shelf IOM A port 4.

3. Cable port pair 1c/2d on each controller to stack 2:

   This is the multipathed cabling for stack 2.

   a. Cable controller 1 port 1c to stack 2, first shelf IOM A port 1.
   b. Cable controller 2 port 1c to stack 2, first shelf IOM B port 1.
   c. Cable controller 1 port 2d to stack 2, last shelf IOM B port 3.
   d. Cable controller 2 port 2d to stack 2, last shelf IOM A port 3.

4. Cable port pair 2c/1b on each controller to stack 2:

   This is the quad-pathed cabling for stack 2. Once completed, stack 2 has quad-pathed connectivity to each controller.

   a. Cable controller 1 port 2c to stack 2, first shelf IOM A port 2.
   b. Cable controller 2 port 2c to stack 2, first shelf IOM B port 2.
   c. Cable controller 1 port 1b to stack 2, last shelf IOM B port 4.
   d. Cable controller 2 port 1b to stack 2, last shelf IOM A port 4.

Maintain

Hot-swap a disk drive in a DS224C or DS212C disk shelf - shelves with IOM12/IOM12B modules

You can hot-swap a failed disk drive in a DS224C or DS212C disk shelf.

Before you begin

- The disk drive that you are installing must be supported by the DS224C or DS212C disk shelf.

  NetApp Hardware Universe

- All other components in the system must be functioning properly; if not, contact technical support.
- The disk drive you are removing must be failed.

  You can verify the disk drive is failed by running the `storage disk show -broken` command. The failed disk drive appears in the list of failed disk drives. If it does not, you should wait, and run the command again.

  > Depending on the disk drive type and capacity, it can take up to several hours for the disk drive to appear in the list of failed disk drives.

- If you are replacing a self-encrypting disk (SED), you must follow the instructions for Replacing an SED in the ONTAP documentation for your version of ONTAP.

  Instructions in the ONTAP documentation describe additional steps you must perform before and after replacing an SED.

  NetApp encryption overview with the CLI

About this task

- You should take steps to avoid electrostatic discharge (ESD):
  - Keep the disk drive in the ESD bag until you are ready to install it.
  - Open the ESD bag by hand or cut the top off with a pair of scissors.

    Do not insert a metal tool or knife into the ESD bag.

  - Always wear an ESD wrist strap grounded to an unpainted surface on your storage enclosure chassis.

    If a wrist strap is unavailable, touch an unpainted surface on your storage enclosure chassis before handling the disk drive.

- You should take steps to handle disk drives carefully:
  - Always use two hands when removing, installing, or carrying a disk drive to support its weight.

    Do not place hands on the disk drive boards exposed on the underside of the disk drive carrier.

  - You should place disk drives on cushioned surfaces, and never stack disk drives on top of each other.
  - You should be careful not to bump disk drives against other surfaces.
- Disk drives should be kept away from magnetic devices.

  Magnetic fields can destroy all data on the disk drive and cause irreparable damage to the disk drive circuitry.

- The best practice is to have the current version of the Disk Qualification Package (DQP) installed before hot-swapping a disk drive.

  Having the current version of the DQP installed allows your system to recognize and utilize newly qualified disk drives; therefore, avoiding system event messages about having non-current disk drive information. You also avoid the possible prevention of disk partitioning because disk drives are not recognized. The DQP also notifies you of non-current disk drive firmware.

  NetApp Downloads: Disk Qualification Package

- The best practice is to have the current versions of disk shelf (IOM) firmware and disk drive firmware on your system before adding new disk shelves, shelf FRU components, or SAS cables.

  Current versions of firmware can be found on the NetApp Support Site.

  NetApp Downloads: Disk Shelf Firmware

  NetApp Downloads: Disk Drive Firmware

- Disk drive firmware is automatically updated (nondisruptively) on new disk drives with non current firmware versions.

  Disk drive firmware checks occur every two minutes.

- If needed, you can turn on the disk shelf's location (blue) LEDs to aid in physically locating the affected disk shelf: `storage shelf location-led modify -shelf-name` *`shelf_name`* `-led-status on`

A disk shelf has three location LEDs: one on the operator display panel and one on each shelf IOM. Location LEDs remain illuminated for 30 minutes. You can turn them off by entering the same command, but using the off option.

- If needed, you can refer to the Monitoring disk shelf LEDs section for information about the meaning and location of disk shelf LEDs on the operator display panel and FRU components.

Steps

1. If you want to manually assign disk ownership for the replacement disk drive, you need to disable automatic drive assignment if it is enabled; otherwise, go to the next step.

   You need to manually assign disk ownership if disk drives in the stack are owned by both controllers in an HA pair.

   You manually assign disk ownership and then reenable automatic drive assignment later in this procedure.

   a. Verify if automatic drive assignment is enabled:`storage disk option show`

      If you have an HA pair, you can enter the command at the console of either controller.

      If automatic drive assignment is enabled, the output shows “on” (for each controller) in the “Auto Assign” column.

   b. If automatic drive assignment is enabled, you need to disable it:`storage disk option modify -node node_name -autoassign off`

      You need to disable automatic drive assignment on both controllers in an HA pair.

2. Properly ground yourself.
3. Unpack the new disk drive, and set it on a level surface near the disk shelf.

   Save all packaging materials for use when returning the failed disk drive.

   NetApp requires that all returned disk drives be in a ESD-rated bag.

4. Physically identify the failed disk drive from the system console warning message and the illuminated attention (amber) LED on the disk drive.

   The activity (green) LED on a failed disk drive can be illuminated (solid), which indicates the disk drive has power, but should not be blinking, which indicates I/O activity. A failed disk drive has no I/O activity.

5. Press the release button on the disk drive face, and then pull the cam handle to its fully open position to release the disk drive from the mid plane.

   When you press the release button, the cam handle on the disk drive springs open partially.

   Disk drives in a DS212C disk shelf are arranged horizontally with the release button located on the left of the disk drive face. Disk drives in a DS224C disk shelf are arranged vertically with the release button located at the top of the disk drive face.

The following shows disk drives in a DS212C disk shelf:

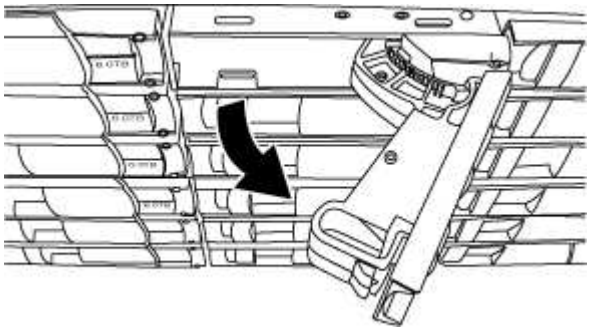

The following shows disk drives in a DS224C disk shelf:

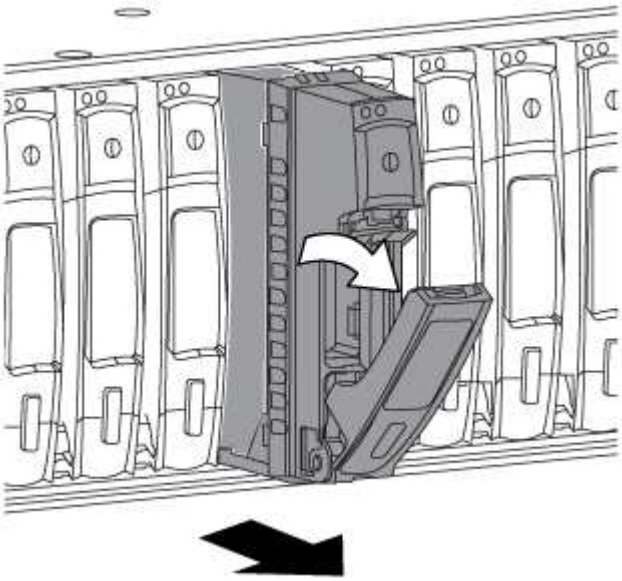

6. Slide out the disk drive slightly to allow the disk to safely spin down, and then remove the disk drive from the disk shelf.

   An HDD can take up to one minute to safely spin down.

   When handling a disk drive, always use two hands to support its weight.

7. Using two hands, with the cam handle in the open position, insert the replacement disk drive into the disk shelf, firmly pushing until the disk drive stops.

   Wait a minimum of 10 seconds before inserting a new disk drive. This allows the system to recognize that a disk drive was removed.

   Do not place hands on the disk drive boards that are exposed on the underside of the disk carrier.

8. Close the cam handle so that the disk drive is fully seated into the mid plane and the handle clicks into place.

   Be sure to close the cam handle slowly so that it aligns correctly with the face of the disk drive.

9. If you are replacing another disk drive, repeat Steps 3 through 8.
10. Verify the disk drive's activity (green) LED is illuminated.

    When the disk drive's activity LED is solid green, it means the disk drive has power. When the disk drive's activity LED is blinking, it means the disk drive has power and I/O is in progress. If the disk drive firmware is automatically updating, the LED will be blinking.

11. If you disabled automatic drive assignment in Step 1, manually assign disk ownership, and then reenable automatic drive assignment if needed:
    a. Display all unowned disks:`storage disk show -container-type unassigned`
    b. Assign each disk:`storage disk assign -disk` *`disk_name`* `-owner` *`owner_name`*

       You can use the wildcard character to assign more than one disk at once.

    c. Reenable automatic drive assignment if needed:`storage disk option modify -node` *`node_name`* `-autoassign on`

       You need to reenable automatic drive assignment on both controllers in an HA pair.

12. Return the failed part to NetApp, as described in the RMA instructions shipped with the kit.

    Contact technical support at NetApp Support, 888-463-8277 (North America), 00-800-44-638277 (Europe), or +800-800-80-800 (Asia/Pacific) if you need the RMA number or additional help with the replacement procedure.

Hot-swap a disk drive in a DS460C disk shelf - shelves with IOM12/IOM12B modules

You can hot-swap a failed disk drive in a DS460C disk shelf.

Before you begin

- The replacement disk drive must be supported by the DS460C disk shelf.

  NetApp Hardware Universe

- All other components in the system must be functioning properly; if not, contact technical support.
- The disk drive you are removing must be failed.

  You can verify the disk drive is failed by running the `storage disk show -broken` command. The failed disk drive appears in the list of failed disk drives. If it does not, you should wait, and run the command again.

  > Depending on the disk drive type and capacity, it can take up to several hours for the disk drive to appear in the list of failed disk drives.

- If you are replacing a self-encrypting disk (SED), you must follow the instructions for Replacing an SED in the ONTAP documentation for your version of ONTAP.

  Instructions in the ONTAP documentation describe additional steps you must perform before and after replacing an SED.

NetApp encryption overview with the CLI

About this task

- You should take steps to avoid electrostatic discharge (ESD):
  - Keep the disk drive in the ESD bag until you are ready to install it.
  - Open the ESD bag by hand or cut the top off with a pair of scissors.

    Do not insert a metal tool or knife into the ESD bag.

  - Always wear an ESD wrist strap grounded to an unpainted surface on your storage enclosure chassis.

    If a wrist strap is unavailable, touch an unpainted surface on your storage enclosure chassis before handling the disk drive.

- You should take steps to handle disk drives carefully:
  - Always use two hands when removing, installing, or carrying a disk drive to support its weight.

    Do not place hands on the disk drive boards exposed on the underside of the disk drive carrier.

  - You should place disk drives on cushioned surfaces, and never stack disk drives on top of each other.
  - You should be careful not to bump disk drives against other surfaces.
- Disk drives should be kept away from magnetic devices.

  Magnetic fields can destroy all data on the disk drive and cause irreparable damage to the disk drive circuitry.

- The best practice is to have the current version of the Disk Qualification Package (DQP) installed before hot-swapping a disk drive.

  Having the current version of the DQP installed allows your system to recognize and utilize newly qualified disk drives; therefore, avoiding system event messages about having non-current disk drive information. You also avoid the possible prevention of disk partitioning because disk drives are not recognized. The DQP also notifies you of non-current disk drive firmware.

  NetApp Downloads: Disk Qualification Package

- The best practice is to have the current versions of disk shelf (IOM) firmware and disk drive firmware on your system before adding new disk shelves, shelf FRU components, or SAS cables.

  Current versions of firmware can be found on the NetApp Support Site.

  NetApp Downloads: Disk Shelf Firmware

  NetApp Downloads: Disk Drive Firmware

- Disk drive firmware is automatically updated (nondisruptively) on new disk drives with non current firmware versions.

  Disk drive firmware checks occur every two minutes.

- If needed, you can turn on the disk shelf's location (blue) LEDs to aid in physically locating the affected disk shelf: `storage shelf location-led modify -shelf-name shelf_name -led-status on`

  A disk shelf has three location LEDs: one on the operator display panel and one on each shelf IOM. Location LEDs remain illuminated for 30 minutes. You can turn them off by entering the same command, but using the off option.

- If needed, you can refer to the Monitoring disk shelf LEDs section for information about the meaning and location of disk shelf LEDs on the operator display panel and FRU components.
- The DS460C drive shelf consist of five drive drawers (drive drawer 1 at the top through drive drawer 5 at the bottom) that each contain 12 drive slots.

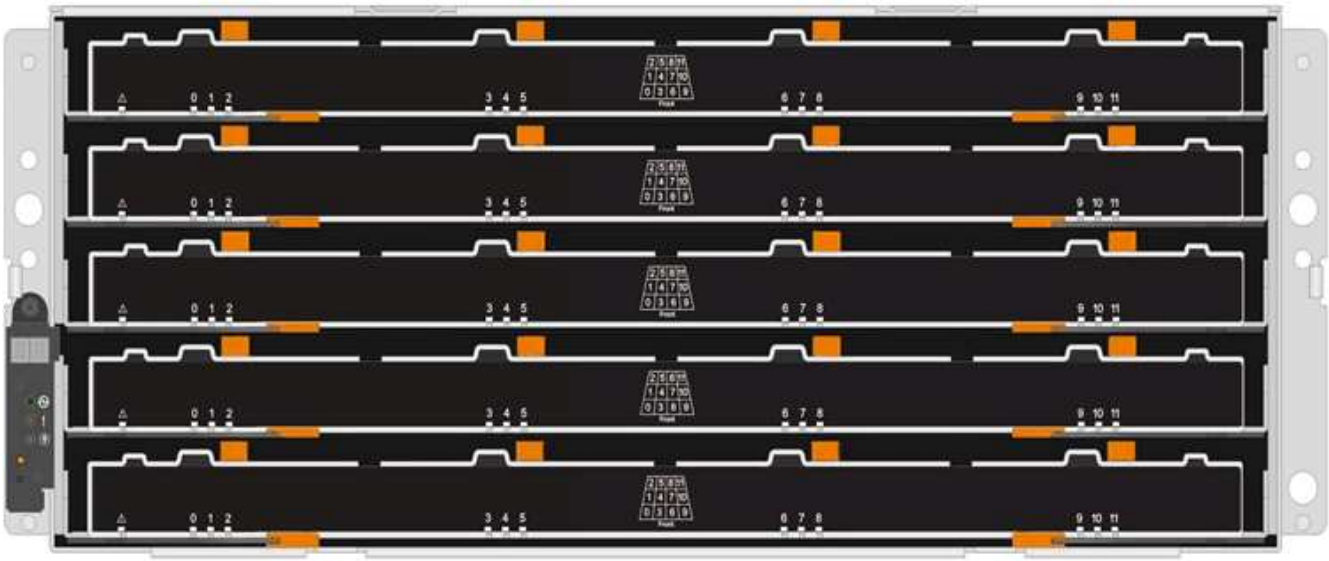

- The following illustration shows how the drives are numbered from 0 to 11 in each drive drawer within the shelf.

Steps

1. If you want to manually assign disk ownership for the replacement disk drive, you need to disable automatic drive assignment if it is enabled; otherwise, go to the next step.

> You need to manually assign disk ownership if disk drives in the stack are owned by both controllers in an HA pair.

> You manually assign disk ownership and then reenable automatic drive assignment later in this procedure.

a. Verify if automatic drive assignment is enabled:`storage disk option show`

   If you have an HA pair, you can enter the command at the console of either controller.

   If automatic drive assignment is enabled, the output shows “on” (for each controller) in the “Auto Assign” column.

b. If automatic drive assignment is enabled, you need to disable it:`storage disk option modify -node node_name -autoassign off`

   You need to disable automatic drive assignment on both controllers in an HA pair.

2. Properly ground yourself.
3. Unpack the new disk drive, and set it on a level surface near the disk shelf.

   Save all packaging materials for use when returning the failed disk drive.

   > NetApp requires that all returned disk drives be in a ESD-rated bag.

4. Identify the failed disk drive from the system console warning message and the illuminated amber attention LED on the drive drawer.

   The 2.5-inch and 3.5-inch SAS drive carriers do not contain LEDs. Instead, you must look at the Attention LEDs on the drive drawers to determine which drive has failed.

   The drive drawer’s Attention LED (amber) blinks so you can open the correct drive drawer to identify which drive to replace.

   The drive drawer’s Attention LED is on the front-left side in front of each drive, with a warning symbol on the drive handle just behind the LED.

5. Open the drawer containing the failed drive:
   a. Unlatch the drive drawer by pulling on both levers.
   b. Using the extended levers, carefully pull the drive drawer out until it stops.
   c. Look at the top of the drive drawer to find the Attention LED that resides on the drawer in front of each drive.
6. Remove the failed drive from the open drawer:
   a. Gently pull back the orange release latch that is in front of the drive you want to remove.

1	Orange release latch

b. Open the cam handle, and lift out the drive slightly.
c. Wait 30 seconds.
d. Use the cam handle to lift the drive from the shelf.

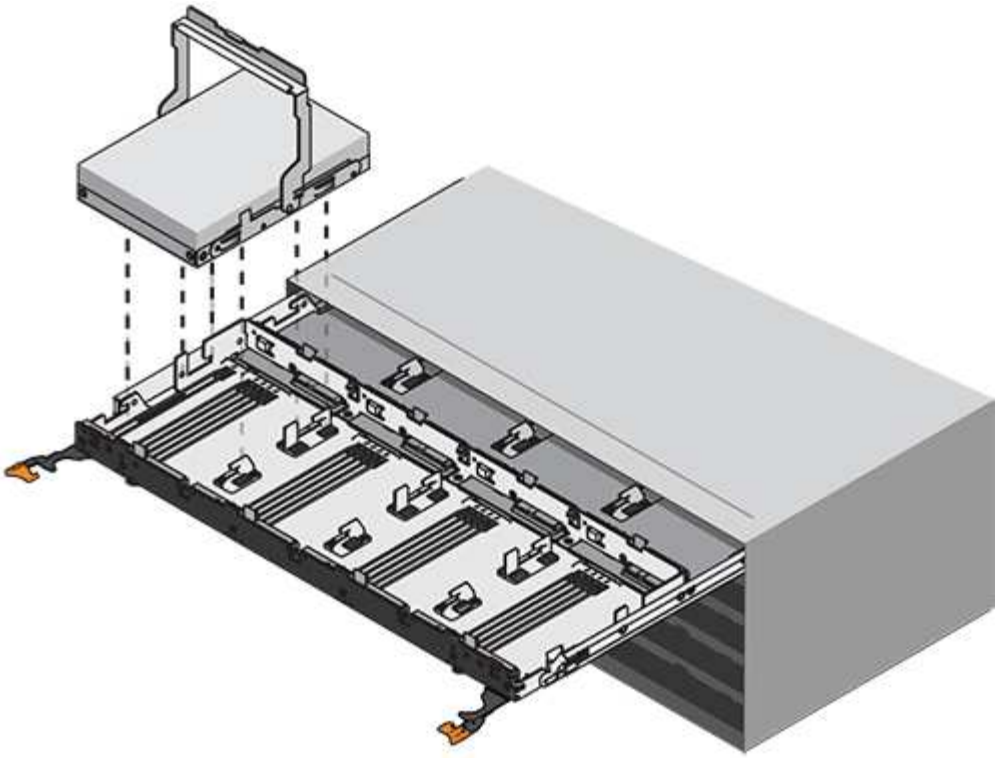

e. Place the drive on an antistatic, cushioned surface away from magnetic fields.

7. Insert the replacement drive in the drawer:
   a. Raise the cam handle on the new drive to vertical.
   b. Align the two raised buttons on each side of the drive carrier with the matching gap in the drive channel on the drive drawer.

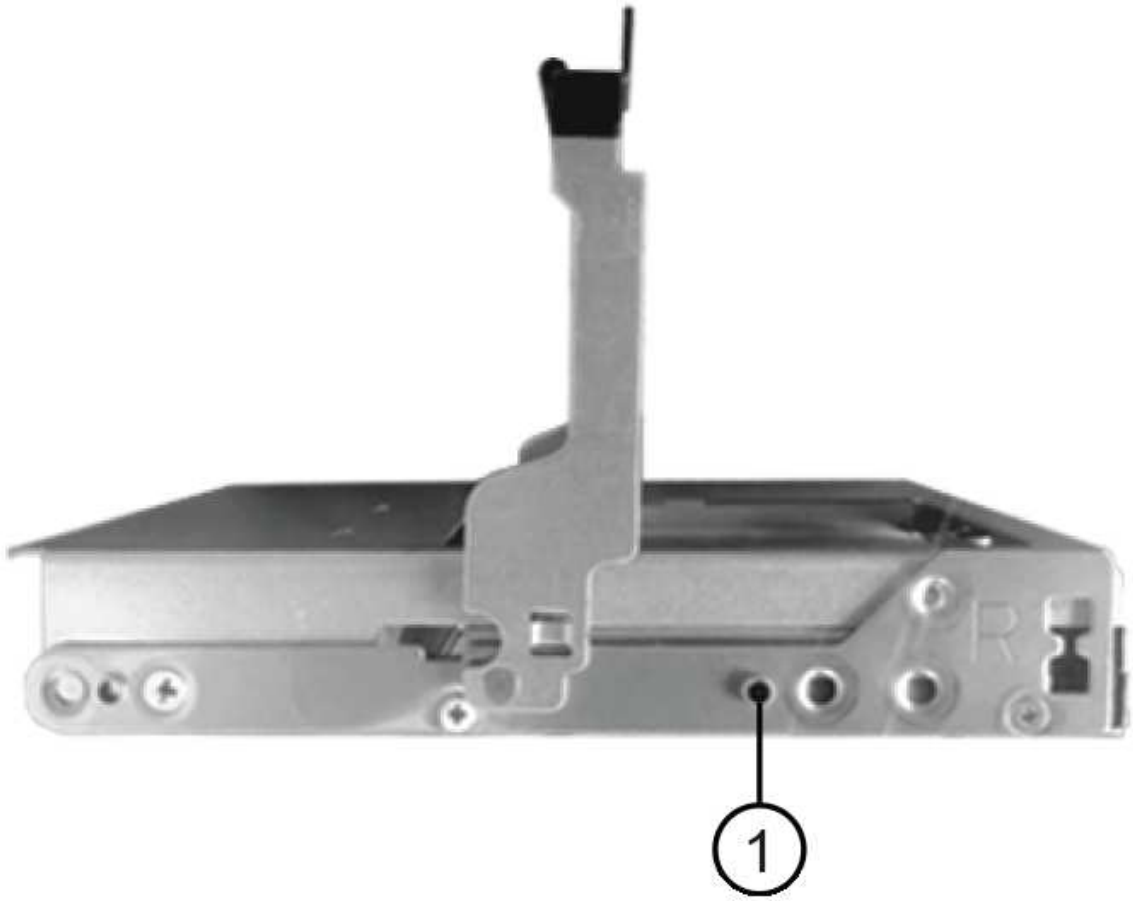

1	Raised button on the right side of the drive carrier

c. Lower the drive straight down, and then rotate the cam handle down until the drive snaps into place under the orange release latch.

d. Carefully push the drive drawer back into the enclosure.

Possible loss of data access: Never slam the drawer shut. Push the drawer in slowly to avoid jarring the drawer and causing damage to the storage array.

e. Close the drive drawer by pushing both levers towards the center.

   The green Activity LED for the replaced drive on the front of the drive drawer comes on when the drive is inserted correctly.

8. If you are replacing another disk drive, repeat Steps 4 through 7.
9. Check the Activity LED and the Attention LED on the drive you replaced.

LED status	Description
The Activity LED is on or blinking, and the Attention LED is off	The new drive is working correctly.
The Activity LED is off	The drive might not be installed correctly. Remove the drive, wait 30 seconds, and then reinstall it.
The Attention LED is on	The new drive might be defective. Replace it with another new drive. When you first insert a drive, its Attention LED might be on. However, the LED should go off within a minute.

10. If you disabled disk ownership automatic assignment in Step 1, manually assign disk ownership, and then reenable disk ownership automatic assignment if needed:
    a. Display all unowned disks:`storage disk show -container-type unassigned`
    b. Assign each disk:`storage disk assign -disk` *`disk_name`* `-owner` *`owner_name`*

       You can use the wildcard character to assign more than one disk at once.

    c. Reenable disk ownership automatic assignment if needed:`storage disk option modify -node` *`node_name`* `-autoassign on`

       You need to reenable disk ownership automatic assignment on both controllers in an HA pair.

11. Return the failed part to NetApp, as described in the RMA instructions shipped with the kit.

    Contact technical support at NetApp Support, 888-463-8277 (North America), 00-800-44-638277 (Europe), or +800-800-80-800 (Asia/Pacific) if you need the RMA number or additional help with the replacement procedure.

Replace a drive drawer in a DS460C disk shelf - shelves with IOM12/IOM12B modules

Replacing a drive drawer in a shelf requires you to either halt the entire storage system (HA pair), which allows you to keep data aggregates on the shelf, or you have the option to keep the HA pair up and running, which requires you to move all of the data from the data aggregates residing on the disk drives, and offline and delete the data aggregates. However, if the shelf contains a root aggregate, you must halt the HA pair.

Before you begin

You need these items for this procedure:

- Antistatic protection

> **Possible hardware damage:** To prevent electrostatic discharge damage to the drive shelf, use proper antistatic protection when handling drive shelf components.

- Replacement drive drawer
- Replacement left and right cable chains
- Flashlight

About this task

- This procedure applies to shelves having DCM drive drawers and/or DCM2 drive drawers. (Shelves will also have two IOM12 modules or two IOM12B modules.)

  When a DCM or DCM2 drive drawer fails, you receive a DCM or DCM2 drive drawer to replace it.

> If when you replace a failed drive drawer, it results in the shelf having a combination of IOM12 modules and any number of DCM2 drive drawers, you must upgrade the IOM12 FW to version 0300 or later because the IOM12 modules require a version of FW that supports DCM2 drive drawers.
>
> The IOM12 FW upgrade can be done before or after replacing a drive drawer. This procedure has you upgrade the FW as part of the preparation for the drawer replacement procedure.

- The DCM drive drawers and the DCM2 drive drawers can be distinguished by their appearance:

  The DCM drive drawers look like the following:

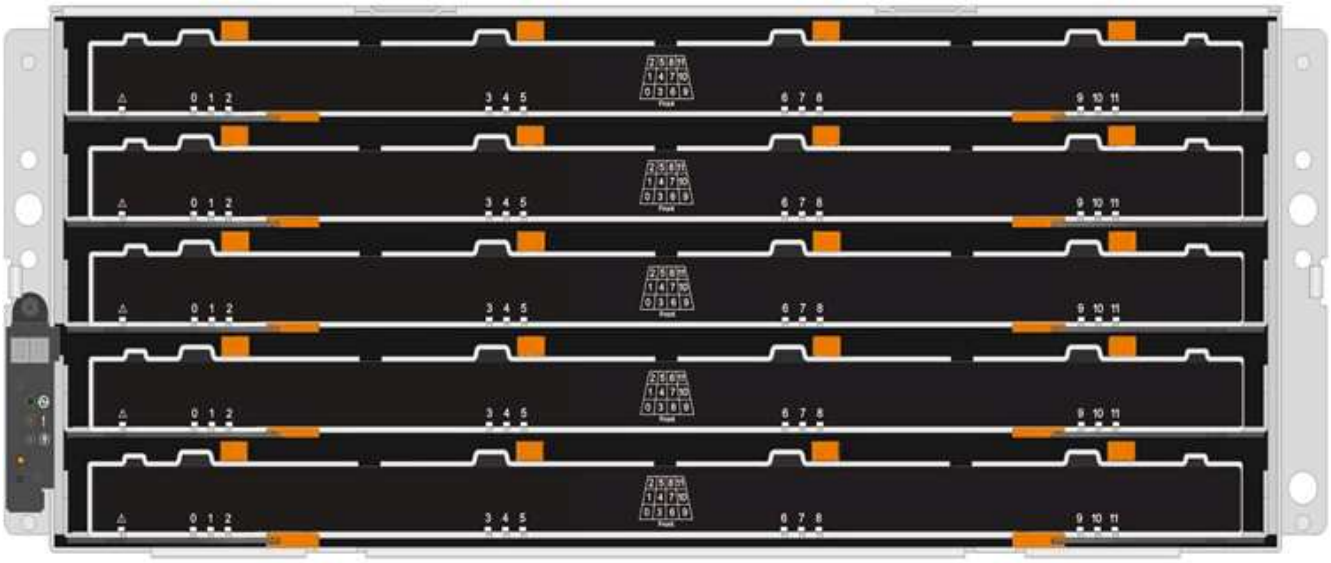

  The DCM2 drive drawers are distinguished by a blue stripe and "DCM2" label:

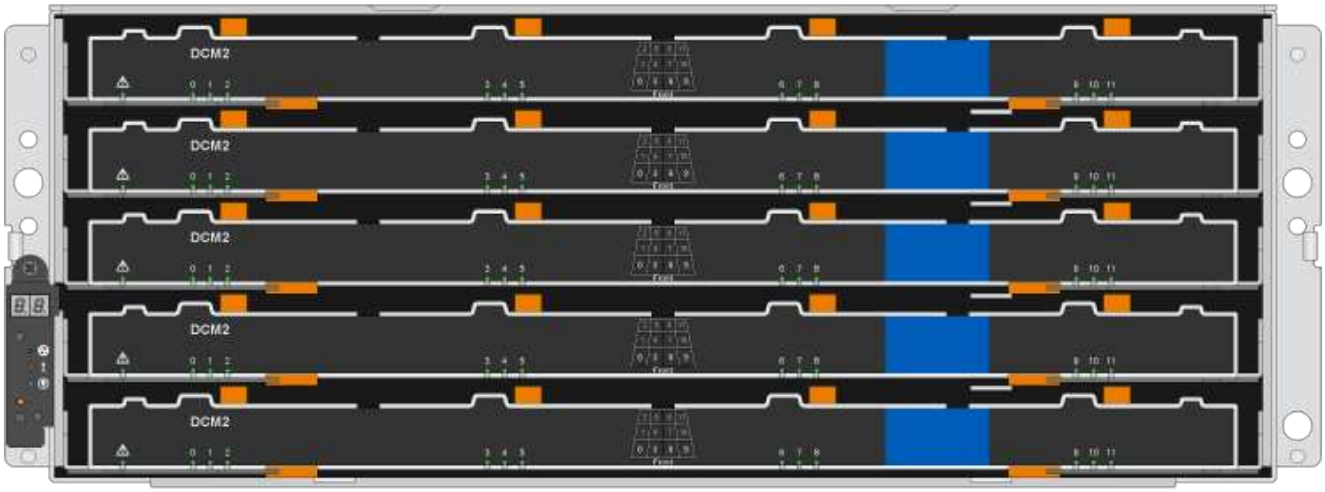

Prepare to replace a drive drawer

Before you replace a drive drawer, you must make sure to update IOM12 FW if needed, and either halt the HA pair, which allows you to keep data aggregates on the shelf, or you have the option to keep the HA pair up and running, which requires you to move all of the data from the data aggregates residing on the disk drives, and offline and delete the data aggregates. However, if the shelf contains a root aggregate, you must halt the HA pair. Lastly, you must power off the shelf.

steps

1. Determine if when you replace the failed drive drawer, it results in the shelf having a combination of IOM12 modules and any number of DCM2 drive drawers.
2. If the shelf will have a combination of IOM12 modules and any number of DCM2 drive drawers, you must upgrade the IOM12 FW to version 0300 or later; otherwise, go to the next step.

   Current versions of firmware can be found on the NetApp Support Site.

   NetApp Downloads: Disk Shelf Firmware

3. If the shelf contains the root aggregate from either controller in the HA pair, or if you chose to halt the HA pair (instead of keeping the HA pair up and running), complete the following substeps; otherwise, go to the next step.

   ⓘ Data aggregates can remain on the shelf when halting the HA pair.

   a. Halt both controllers in the HA pair.
   b. Verify that your HA pair halted by checking the storage system console.
   c. Power off the shelf.
   d. Go to the section, Remove the cable chains.
4. If you chose to keep the HA pair up and running, complete the following substeps:

   ⓘ If you attempt to replace a drawer with aggregates on the disk shelf, you could cause a system disruption with a multidisk panic.

a. Move all of the data from the data aggregates residing on the disk drives.

   Data includes, but is not limited to, volumes and LUNs.

b. Offine and delete the aggregates to allow the disk drives to become spares:

   Commands can be entered from the clustershell of either controller.

   `storage aggregate offline -aggregate aggregate_name`

   `storage aggregate delete -aggregate aggregate_name`

c. Verify that the disk drives have no aggregates (are spares):

   i. Enter the following command from the clustershell of either controller: `storage disk show -shelf shelf_number`

   ii. Check the output to verify that the drisk drives are spares.

   Disk drives that are spares show `spare` in the `Container Type` column.

   > If you have failed disk drives in the shelf, `broken` appears in the `Container Type` column.

d. Power off the shelf.

Remove the cable chains

Left and right cable chains for each drive drawer in the DS460C drive shelf allow the drawers to slide in and out. Before you can remove a drive drawer, you must remove both cable chains.

Before you begin

- You have completed the Prepare to replace a drive drawer steps so that your HA pair is halted or you have moved all of the data from the data aggregates residing on the disk drives, and offlined and deleted the data aggregates to allow the disk drives to become spares.
- You have powered off the shelf.
- You have obtained the following items:
  - Antistatic protection

    > **Possible hardware damage:** To prevent electrostatic discharge damage to the shelf, use proper antistatic protection when handling shelf components.

  - Flashlight

About this task

Each drive drawer has left and right cable chains. The metal ends on the cable chains slide into corresponding vertical and horizontal brackets inside the enclosure, as follows:

- The left and right vertical brackets connect the cable chain to the enclosure's midplane.
- The left and right horizontal brackets connect the cable chain to the individual drawer.

Steps

1. Put on antistatic protection.
2. From the rear of the drive shelf, remove the right fan module, as follows:
   a. Press the orange tab to release the fan module handle.

      The figure shows the handle for the fan module extended and released from the orange tab on the left.

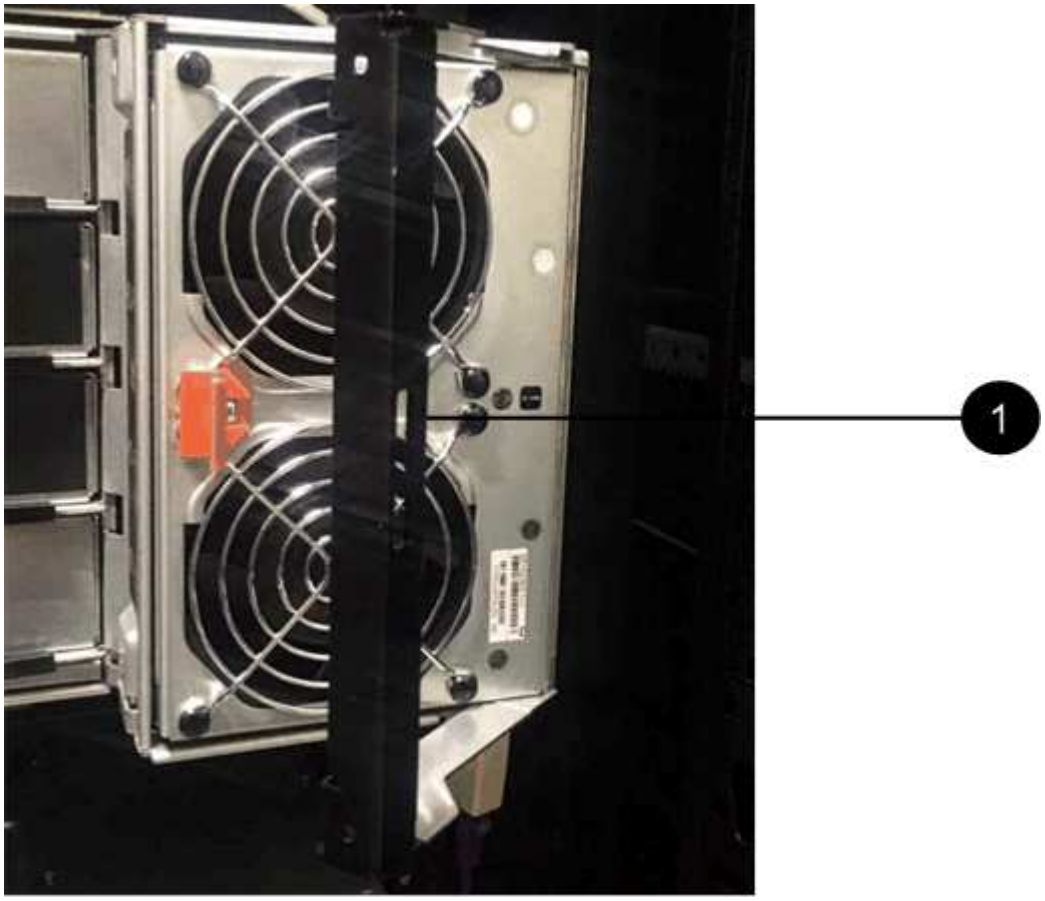

1	Fan module handle

   b. Using the handle, pull the fan module out of the drive shelf, and set it aside.
3. Manually determine which of the five cable chains to disconnect.

   The figure shows the right side of the drive shelf with the fan module removed. With the fan module removed, you can see the five cable chains and the vertical and horizontal connectors for each drawer. The callouts for drive drawer 1 are provided.

2
1
3

1	Cable chain
2	Vertical connector (connected to the midplane)
3	Horizontal connector (connected to the drive drawer)

The top cable chain is attached to drive drawer 1. The bottom cable chain is attached to drive drawer 5.

4. Use your finger to move the cable chain on the right side to the left.
5. Follow these steps to disconnect any of the right cable chains from its corresponding vertical bracket.
   a. Using a flashlight, locate the orange ring on the end of the cable chain that is connected to the vertical bracket in the enclosure.

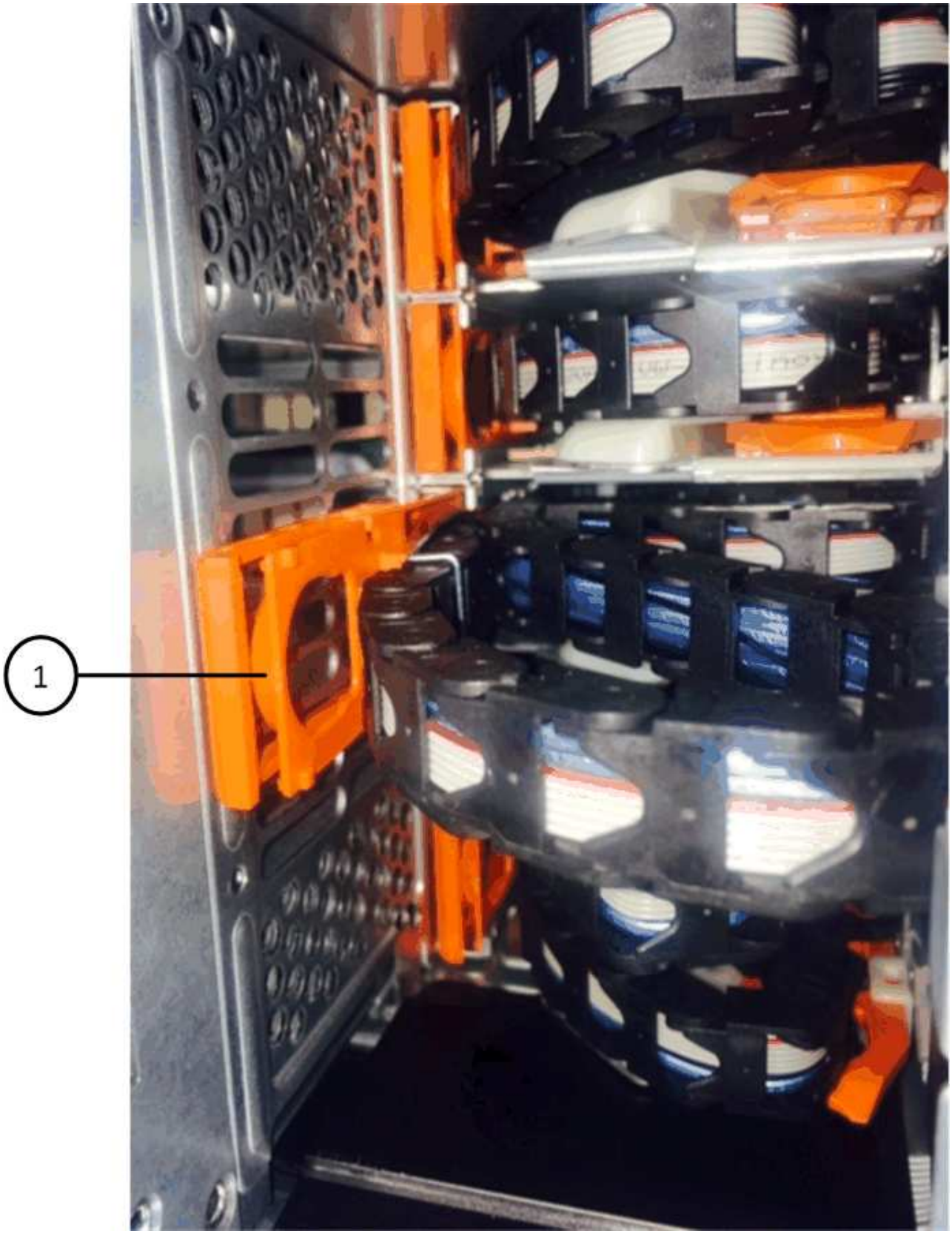

1	Orange ring on the vertical bracket

b. Disconnect the vertical connector (connected to the midplane) by gently pressing on the center of the

orange ring and pulling the left side of the cable out of the enclosure.

c. To unplug the cable chain, carefully pull your finger toward you approximately 1 inch (2.5 cm), but leave the cable chain connector within the vertical bracket.

6. Follow these steps to disconnect the other end of the cable chain:

   a. Using a flashlight, locate the orange ring on the end of the cable chain that is attached to the horizontal bracket in the enclosure.

      The figure shows the horizontal connector on the right and the cable chain disconnected and partially pulled out on the left side.

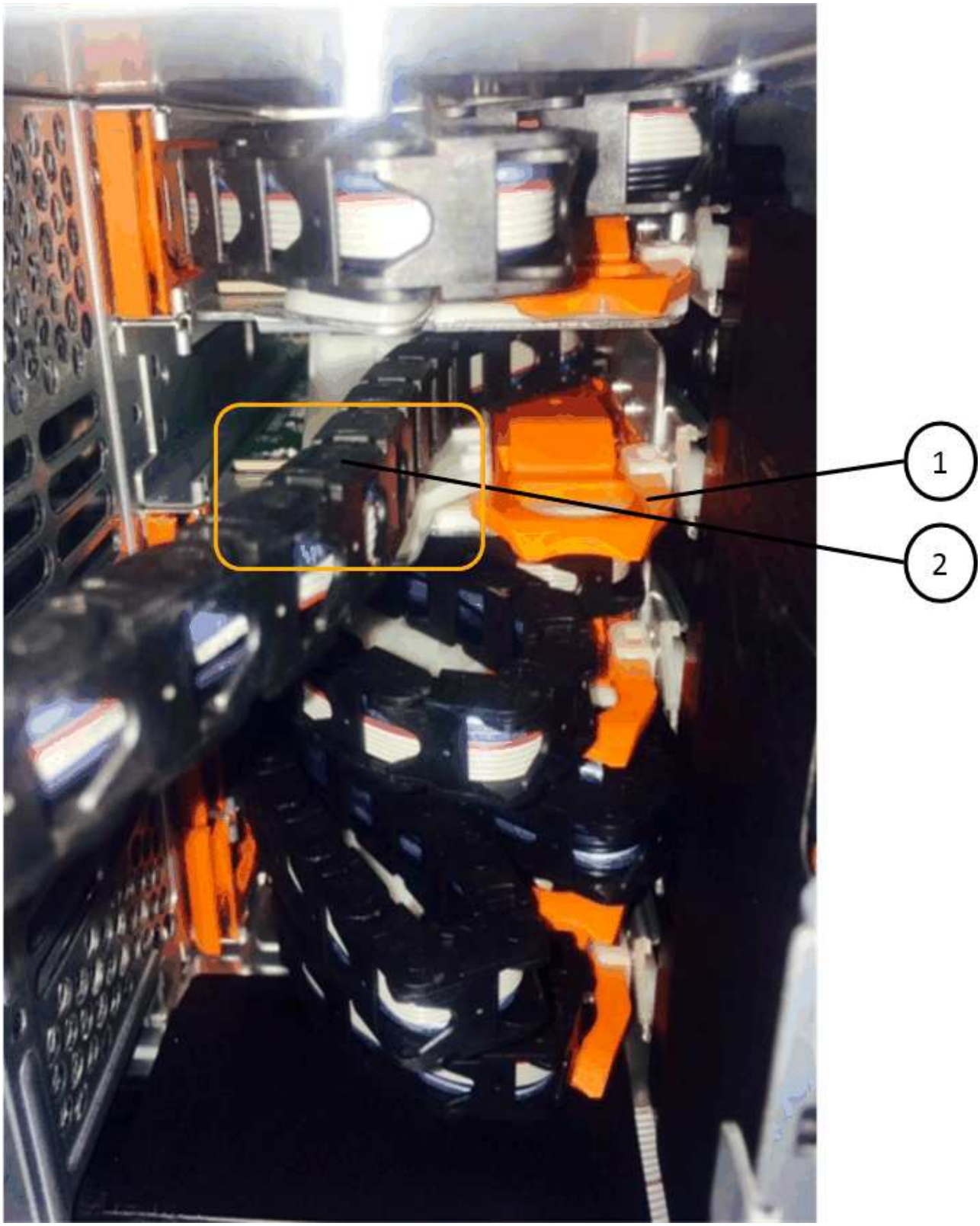

1	Orange ring on horizontal bracket
2	Cable chain

b. Gently insert your finger into the orange ring.

   The figure shows the orange ring on the horizontal bracket being pushed down so that the rest of the cable chain can be pulled out of the enclosure.

c. Pull your finger toward you to unplug the cable chain.

7. Carefully pull the entire cable chain out of the drive shelf.
8. From the back of the drive shelf, remove the left fan module.
9. Follow these steps to disconnect the left cable chain from its vertical bracket:
   a. Using a flashlight, locate the orange ring on the end of the cable chain attached to the vertical bracket.
   b. Insert your finger into the orange ring.
   c. To unplug the cable chain, pull your finger toward you approximately 1 inch (2.5 cm), but leave the cable chain connector within the vertical bracket.
10. Disconnect the left cable chain from the horizontal bracket, and pull the entire cable chain out of the drive shelf.

Remove a drive drawer

After removing the right and left cable chains, you can remove the drive drawer from the drive shelf. Removing a drive drawer entails sliding the drawer part of the way out, removing the drives, and removing the drive drawer.

Before you begin

- You have removed the right and left cable chains for the drive drawer.
- You have replaced the right and left fan modules.

Steps

1. Remove the bezel from the front of the drive shelf.
2. Unlatch the drive drawer by pulling out on both levers.
3. Using the extended levers, carefully pull the drive drawer out until it stops. Do not completely remove the drive drawer from the drive shelf.
4. Remove the drives from the drive drawer:
   a. Gently pull back the orange release latch that is visible on the center front of each drive. The following image shows the orange release latch for each of the drives.

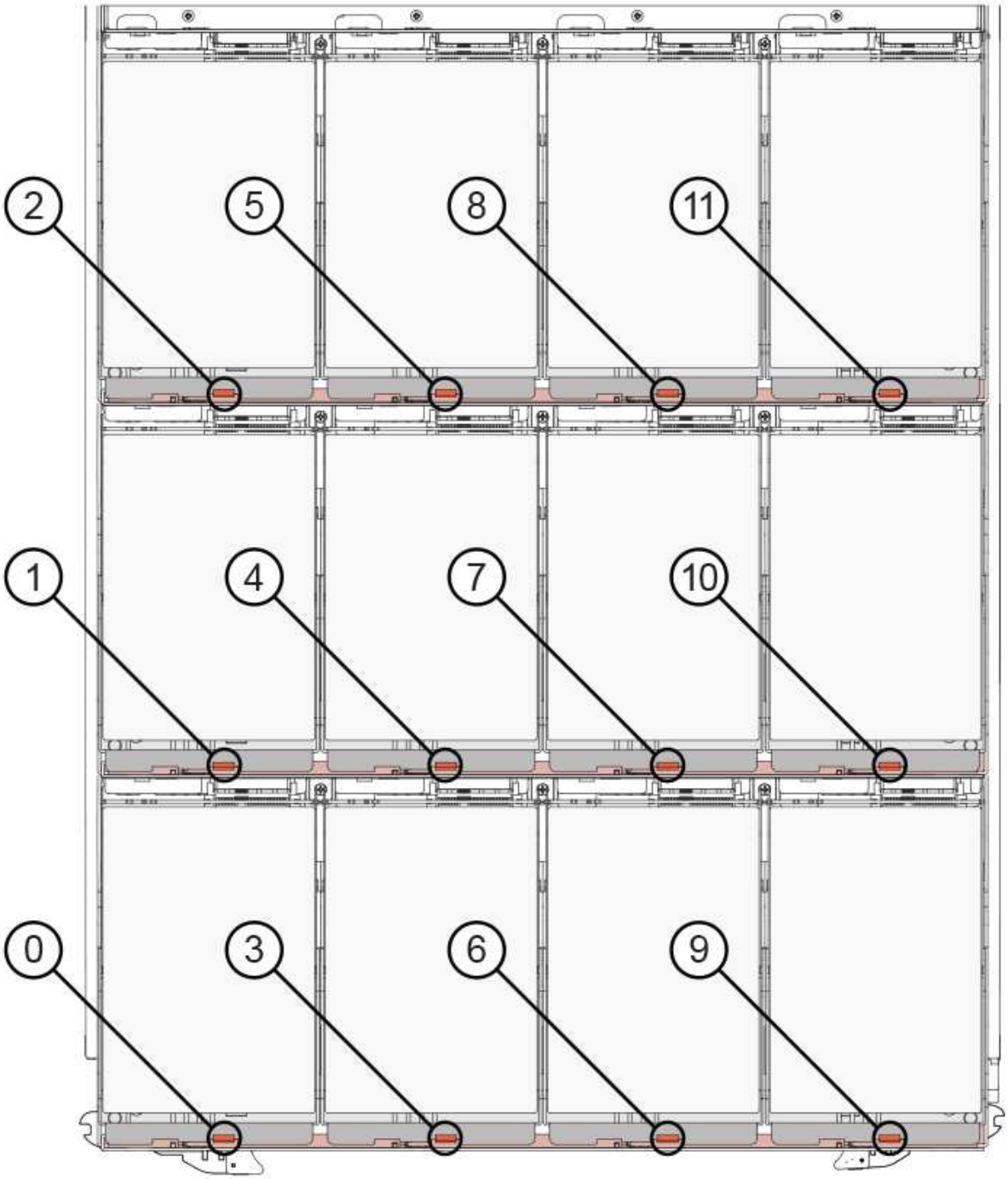

b. Raise the drive handle to vertical.

c. Use the handle to lift the drive from the drive drawer.

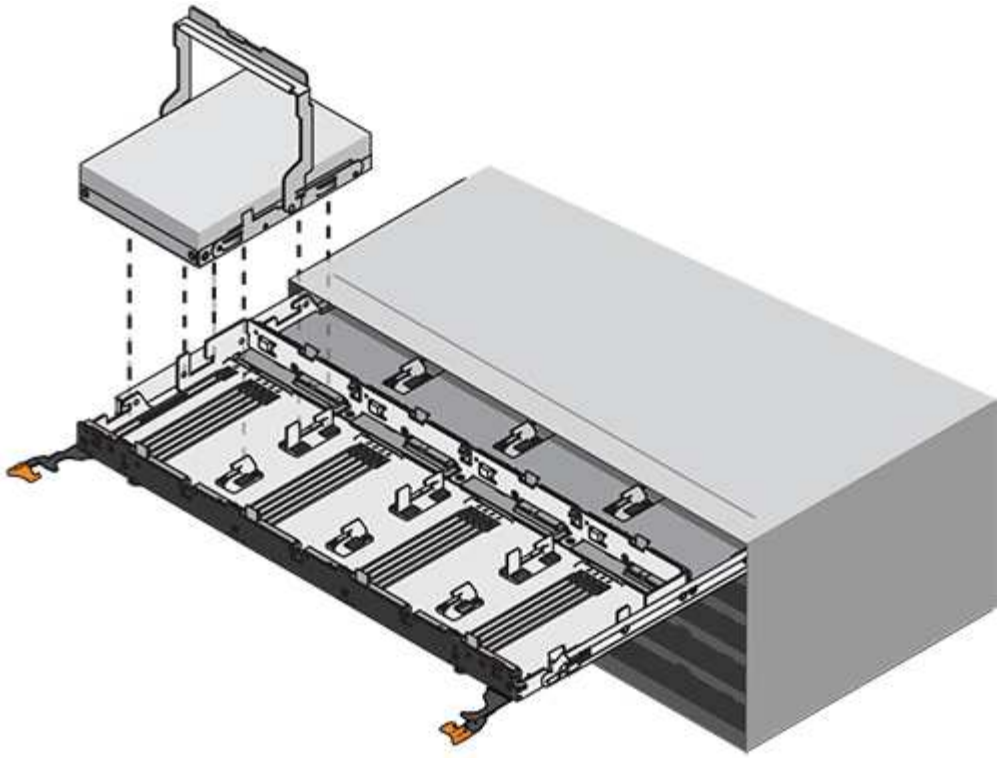

d. Place the drive on a flat, static-free surface and away from magnetic devices.

> **Possible loss of data access:** Magnetic fields can destroy all data on the drive and cause irreparable damage to the drive circuitry. To avoid loss of data access and damage to the drives, always keep drives away from magnetic devices.

5. Follow these steps to remove the drive drawer:

   a. Locate the plastic release lever on each side of the drive drawer.

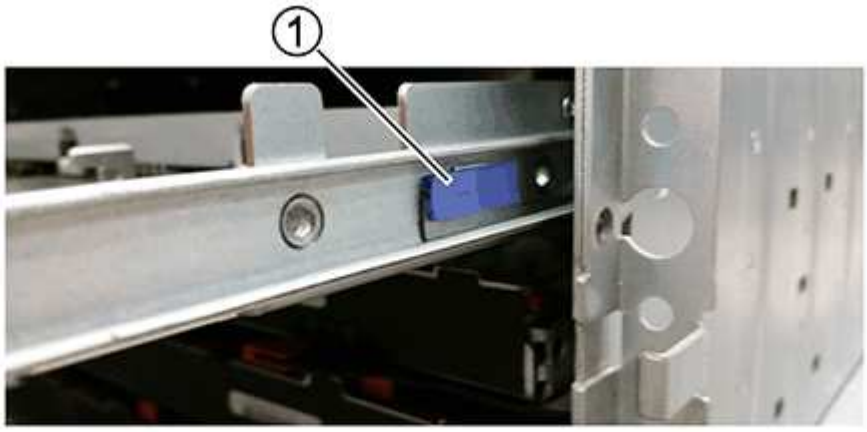

1	Drive drawer release lever

   b. Open both release levers by pulling the latches toward you.

c. While holding both release levers, pull the drive drawer toward you.

d. Remove the drive drawer from the drive shelf.

Install a drive drawer

Installing a drive drawer into a drive shelf entails sliding the drawer into the empty slot, installing the drives, and replacing the front bezel.

Before you begin

- You have obtained the following items:
  - Replacement drive drawer
  - Flashlight

Steps

1. From the front of the drive shelf, shine a flashlight into the empty drawer slot, and locate the lock-out tumbler for that slot.

   The lock-out tumbler assembly is a safety feature that prevents you from being able to open more than one drive drawer at one time.

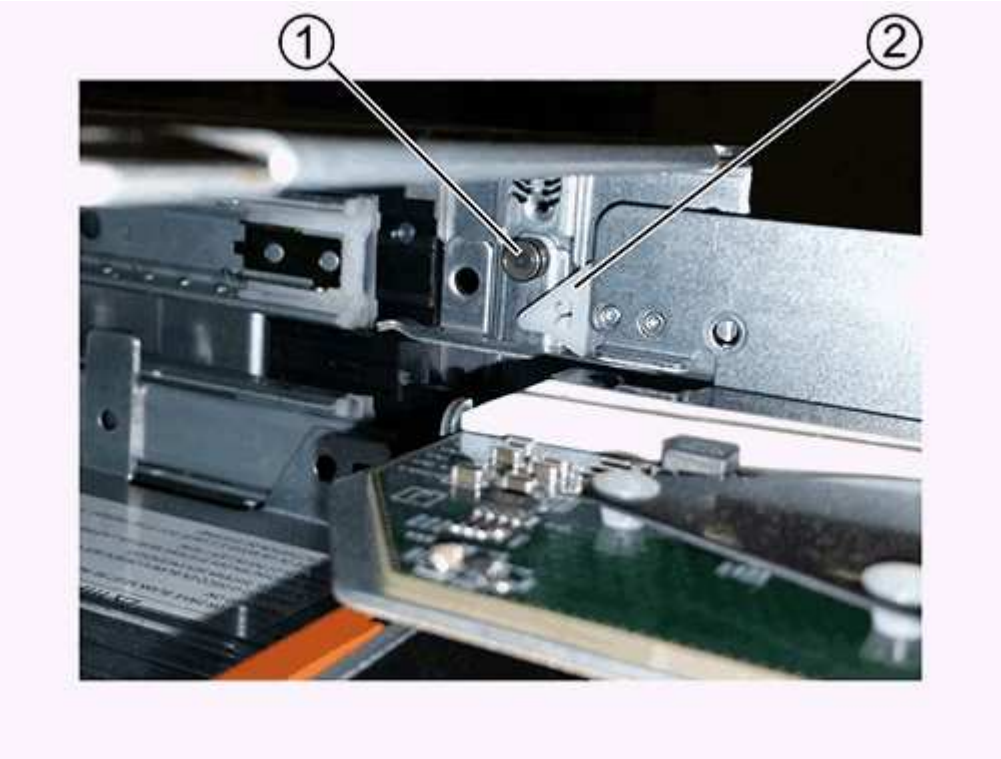

1	Lock-out tumbler
2	Drawer guide

2. Position the replacement drive drawer in front of the empty slot and slightly to the right of center.

   Positioning the drawer slightly to the right of center helps to ensure that the lock-out tumbler and the

drawer guide are correctly engaged.

3. Slide the drive drawer into the slot, and ensure that the drawer guide slides under the lock-out tumbler.

> **Risk of equipment damage:** Damage occurs if the drawer guide does not slide under the lock-out tumbler.

4. Carefully push the drive drawer all the way in until the latch fully engages.

> **Risk of equipment damage:** Stop pushing the drive drawer if you feel excessive resistance or binding. Use the release levers at the front of the drawer to slide the drawer back out. Then, reinsert the drawer into the slot, and ensure that it slides in and out freely.

5. Follow these steps to reinstall the drives in the drive drawer:
   a. Unlatch the drive drawer by pulling out on both levers at the front of the drawer.
   b. Using the extended levers, carefully pull the drive drawer out until it stops. Do not completely remove the drive drawer from the drive shelf.
   c. On the drive you are installing, raise the handle to vertical.
   d. Align the two raised buttons on each side of the drive with the notches on the drawer.

      The figure shows the right side view of a drive, showing the location of the raised buttons.

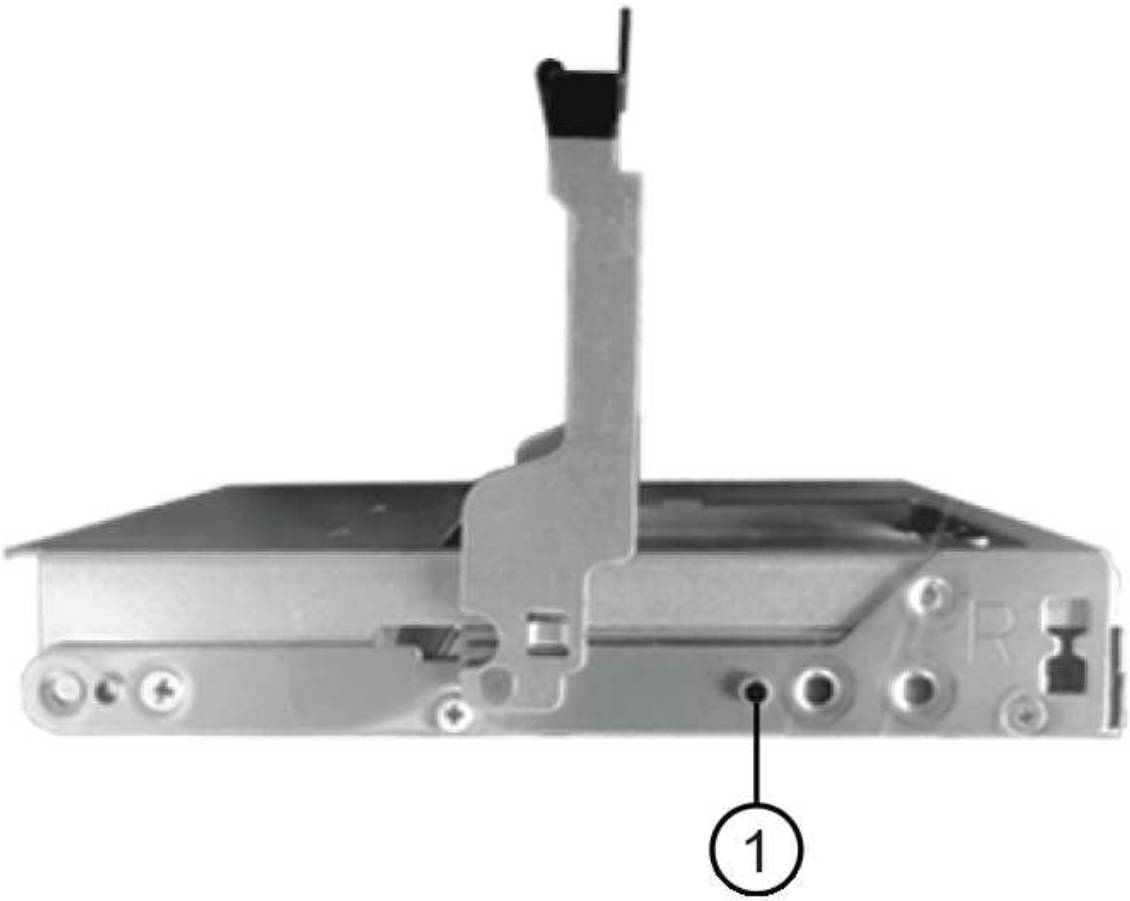

❶	Raised button on the right side of the drive.

e. Lower the drive straight down, and then rotate the drive handle down until the drive snaps into place.

   If you have a partially populated shelf, meaning that the drawer in which you are reinstalling drives has less than the 12 drives it supports, install the first four drives into the front slots (0, 3, 6, and 9).

   Risk of equipment malfunction: To allow for proper air flow and prevent overheating, always install the first four drives into the front slots (0, 3, 6, and 9).

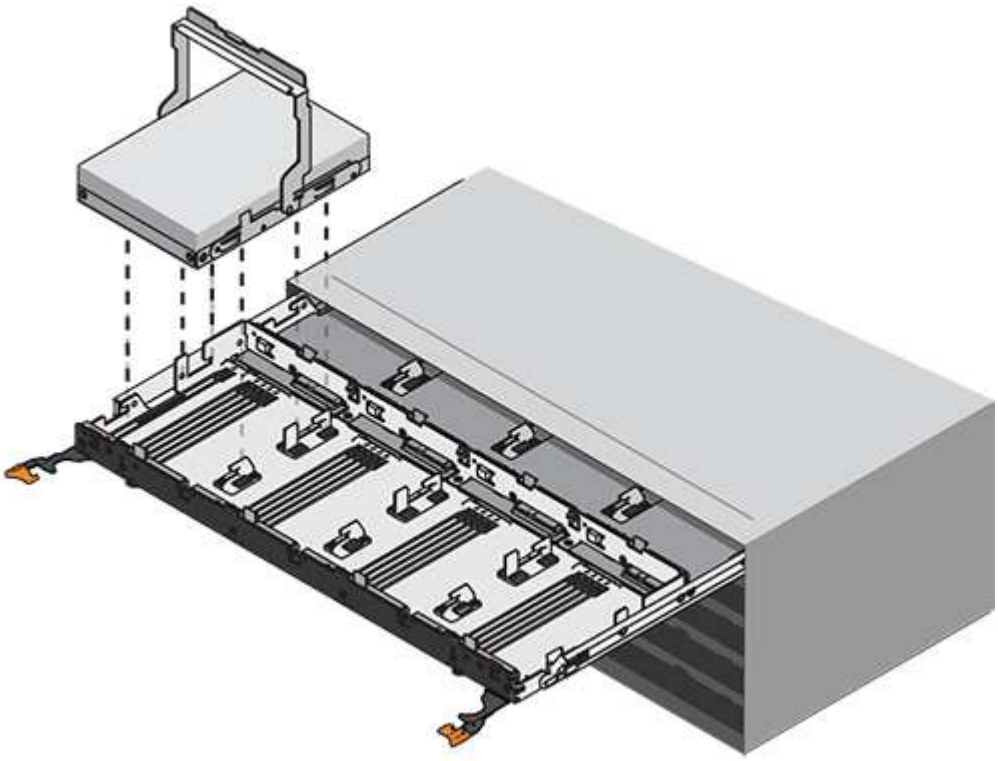

f. Repeat these substeps to reinstall all of the drives.

6. Slide the drawer back into the drive shelf by pushing it from the center and closing both levers.

   Risk of equipment malfunction: Make sure to completely close the drive drawer by pushing both levers. You must completely close the drive drawer to allow proper airflow and prevent overheating.

7. Attach the bezel to the front of the drive shelf.

Attach the cable chains

The final step in installing a drive drawer is attaching the replacement left and right cable chains to the drive shelf. When attaching a cable chain, reverse the order you used when disconnecting the cable chain. You must insert the chain's horizontal connector into the horizontal bracket in the enclosure before inserting the chain's vertical connector into the vertical bracket in the enclosure.

Before you begin

- You have replaced the drive drawer and all of the drives.
- You have two replacement cable chains, marked as LEFT and RIGHT (on the horizontal connector next to the drive drawer).

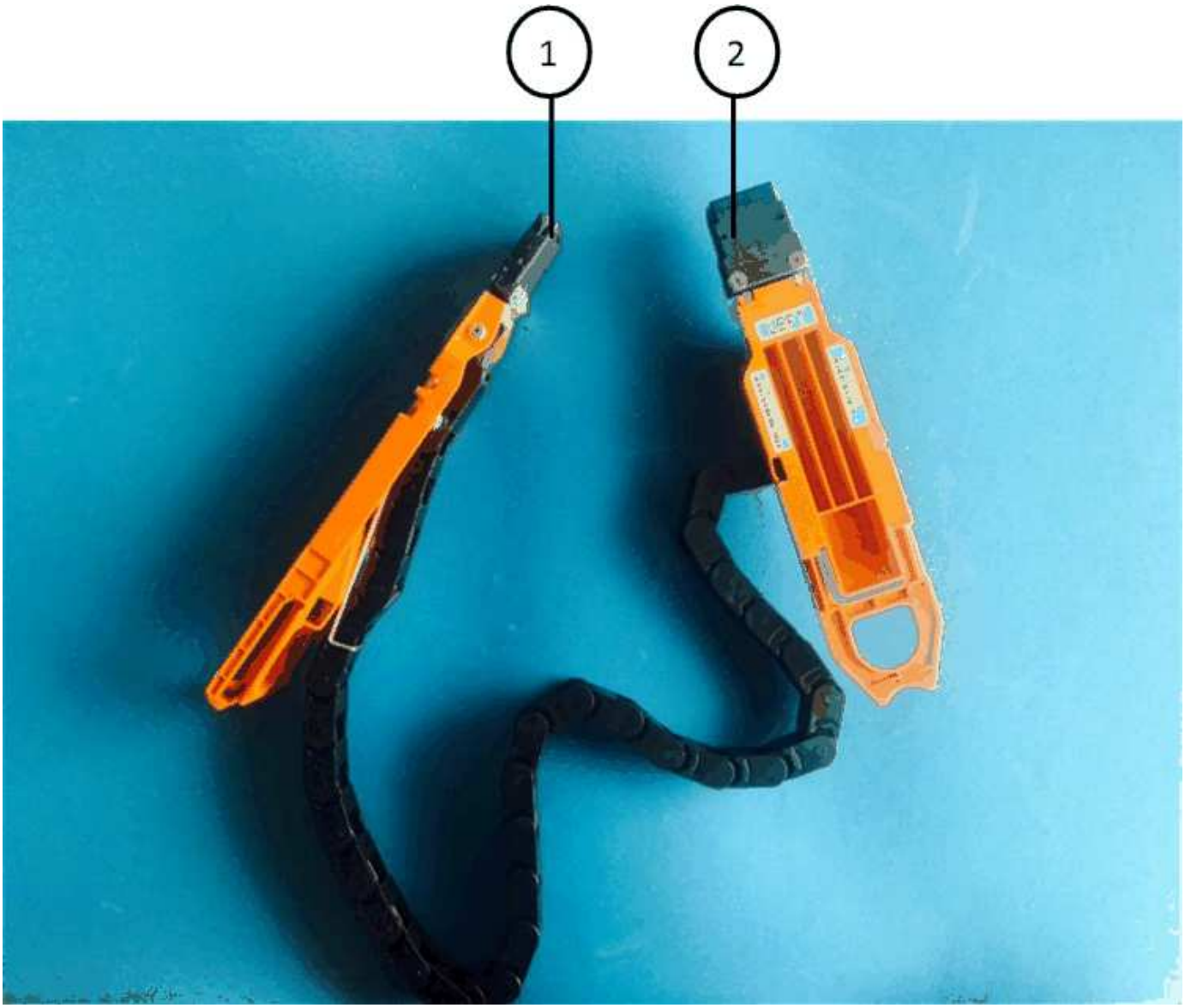

Callout	Cable chain	Connector	Connects to
1	Left	Vertical	Midplane
2	Left	Horizontal	Drive drawer

Callout	Cable chain	Connector	Connects to
❶	Right	Horizontal	Drive drawer
❷	Right	Vertical	Midplane

Steps

1. Follow these steps to attach the left cable chain:
   a. Locate the horizontal and vertical connectors on the left cable chain and the corresponding horizontal and vertical brackets inside the enclosure.
   b. Align both cable chain connectors with their corresponding brackets.
   c. Slide the cable chain's horizontal connector under the guide rail on the horizontal bracket, and push it in as far as it can go.

      The figure shows the guide rail on the left side for the second drive drawer in the enclosure.

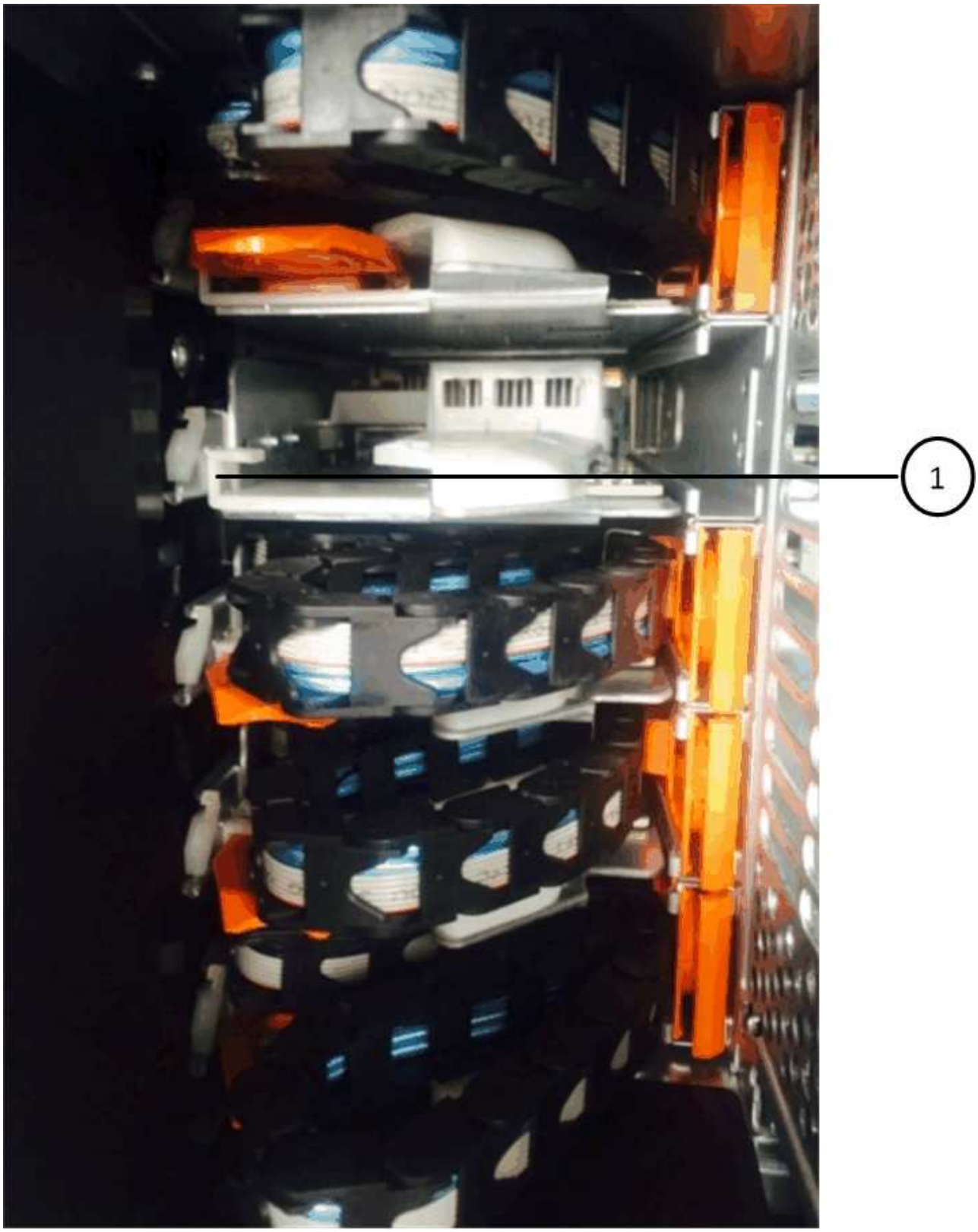

1	Guide rail

> **Risk of equipment malfunction:** Make sure to slide the connector underneath the guide rail on the bracket. If the connector rests on the top of the guide rail, problems might occur when the system runs.

d. Slide the vertical connector on the left cable chain into the vertical bracket.

e. After you have reconnected both ends of the cable chain, carefully pull on the cable chain to verify that both connectors are latched.

> **Risk of equipment malfunction:** If the connectors are not latched, the cable chain might come loose during drawer operation.

2. Reinstall the left fan module.
3. Follow these steps to reattach the right cable chain:
   a. Locate the horizontal and vertical connectors on the cable chain and their corresponding horizontal and vertical brackets inside the enclosure.
   b. Align both cable chain connectors with their corresponding brackets.
   c. Slide the cable chain's horizontal connector under the guide rail on the horizontal bracket and push it in as far as it will go.

> **Risk of equipment malfunction:** Make sure to slide the connector underneath the guide rail on the bracket. If the connector rests on the top of the guide rail, problems might occur when the system runs.

   d. Slide the vertical connector on the right cable chain into the vertical bracket.
   e. After you reconnect both ends of the cable chain, carefully pull on the cable chain to verify that both connectors are latched.

> **Risk of equipment malfunction:** If the connectors are not latched, the cable chain might come loose during drawer operation.

4. Reinstall the right fan module.
5. Reapply power:
   a. Turn on both power switches on the drive shelf.
   b. Confirm that both fans come on and that the amber LED on the back of the fans is off.
6. If you had halted the HA pair, boot ONTAP on both controllers; otherwise go to the next step.
7. If you had moved data off the shelf and deleted the data aggregates, you can now use the spare disks in the shelf for aggregate creation or expansion.

   Aggregate creation workflow

   Aggregate expansion workflow

Drive shelf

Overview - SAS3 shelves

The NetApp SAS3 drive shelf uses SAS connectors to connect to the storage system.

Take the following actions to maintain your SAS3 drive shelf.

- Cold-replace a shelf
- Hot-remove a shelf
- Monitor shelf LEDs

Cold-replace a shelf - shelves with IOM12/IOM12B modules

When replacing a drive shelf in a production system that has disks in use, you need to perform a cold shelf replacement. This is a disruptive procedure. It requires you to halt the controllers in your HA pair.

Use the KB article How to replace a shelf chassis using a cold shelf removal procedure.

Hot-remove a shelf - shelves with IOM12/IOM12B modules

You can hot-remove a disk shelf with IOM12/IOM12B modules (nondisruptively remove a disk shelf from a system that is powered on and I/O is in progress) when you need to move or replace a disk shelf. You can hot-remove one or more disk shelves from anywhere within a stack of disk shelves or remove a stack of disk shelves.

Before you begin

- Your system must be a multipath HA, tri-path HA, multipath, quad-path HA, or quad-path configuration.

  For platforms with internal storage, the external storage must be cabled as multipath HA, tri-path HA, or multipath.

  > For a FAS2600 series single-controller system that has the external storage cabled with multipath connectivity, the system is a mixed-path configuration because the internal storage uses single-path connectivity.

- Your system cannot have any SAS cabling error messages.

  You can download and run Active IQ Config Advisor to view any SAS cabling error messages and the corrective actions you should take.

  NetApp Downloads: Config Advisor

- HA pair configurations cannot be in a takeover state.
- You must have removed all aggregates from the disk drives (the disk drives must be spares) in the disk shelves you are removing.

  > If you attempt this procedure with aggregates on the disk shelf you are removing, you could fail the system with a multidisk panic.

  You can use the `storage aggregate offline -aggregate` *`aggregate_name`* command and then

the `storage aggregate delete -aggregate` *`aggregate_name`* command.

- If you are removing one or more disk shelves from within a stack, you must have factored the distance to bypass the disk shelves you are removing; therefore, if the current cables are not long enough, you need to have longer cables available.

About this task

- **Best practice:** The best practice is to remove disk drive ownership after you remove the aggregates from the disk drives in the disk shelves you are removing.

  Removing ownership information from a spare disk drive allows the disk drive to be properly integrated into another node (as needed).

> The procedure for removing ownership from disk drives requires you to disable disk ownership automatic assignment. You reenable disk ownership automatic assignment at the end of this procedure.
>
> Disks and aggregates overview

- For a clustered ONTAP system that is greater than two-nodes, best practice is to have reassigned epsilon to an HA pair other than the one that is undergoing planned maintenance.

  Reassigning epsilon minimizes the risk of unforeseen errors impacting all nodes in a clustered ONTAP system. You can use the following steps to determine the node holding epsilon and reassign epsilon if needed:

  1. Set privilege level to advanced: `set -privilege advanced`
  2. Determine which node holds epsilon: `cluster show`

     The node that holds epsilon shows `true` in the `Epsilon` column. (The nodes that do not hold epsilon show `false`.)

  3. If the node in the HA pair that is undergoing maintenance shows `true` (holds epsilon), then remove epsilon from the node: `cluster modify -node` *`node_name`* `-epsilon false`
  4. Assign epsilon to a node in another HA pair: `cluster modify -node` *`node_name`* `-epsilon true`
  5. Return to the admin privilege level: `set -privilege admin`

- If you are hot-removing a disk shelf from a stack (but keeping the stack), you recable and verify one path at a time (path A then path B) to bypass the disk shelf you are removing so that you always maintain single-path connectivity from the controllers to the stack.

> If you do not maintain single-path connectivity from the controllers to the stack when recabling the stack to bypass the disk shelf you are removing, you could fail the system with a multidisk panic.

- **Possible shelf damage:** If you are removing a DS460C shelf and you are moving it to a different part of the data center or transporting it to a different location, see the "Move or transport DS460C shelves" section at the end of this procedure.

Steps

1. Verify that your system configuration is `Multi-Path HA`, `tri-path HA`, `Multi-Path`, `Quad-path HA`, or `Quad-path` by running the the `sysconfig` command from the nodeshell of either controller.

   It might take up to a minute for the system to complete discovery.

   The configuration is listed in the `System Storage Configuration` field.

   > For a FAS2600 series single-controller system that has the external storage cabled with multipath connectivity, the output is displayed as `mixed-path` because the internal storage uses single-path connectivity.

2. Verify that the disk drives in the disk shelves you are removing have no aggregates (are spares) and ownership is removed:

   a. Enter the following command from the clustershell of either controller: `storage disk show -shelf` *`shelf_number`*

   b. Check the output to verify that there are no aggregates on the disk drives in the disk shelves you are removing.

      Disk drives with no aggregates have a dash in the `Container Name` column.

   c. Check the output to verify that ownership is removed from the disk drives on the disk shelves you are removing.

      Disk drives with no ownership have a dash in the `Owner` column.

      > If you have failed disk drives in the shelf you are removing, they have broken in the `Container Type` column. (Failed disk drive do not have ownership.)

      The following output shows disk drives on the disk shelf being removed (disk shelf 3) are in a correct state for removing the disk shelf. The aggregates are removed on all of the disk drives; therefore, a dash appears in the `Container Name` column for each disk drive. Ownership is also removed on all of the disk drives; therefore, a dash appears in the `Owner` column for each disk drive.

```
cluster::> storage disk show -shelf 3

           Usable           Disk   Container   Container
Disk         Size Shelf Bay Type   Type        Name       Owner
-------- -------- ----- --- ------ ----------- ---------- ---------
...
1.3.4           -     3   4 SAS    spare                -         -
1.3.5           -     3   5 SAS    spare                -         -
1.3.6           -     3   6 SAS    broken               -         -
1.3.7           -     3   7 SAS    spare                -         -
...
```

3. Physically locate the disk shelves you are removing.

   If needed, you can turn on the disk shelf's location (blue) LEDs to aid in physically locating the affected disk

shelf: `storage shelf location-led modify -shelf-name shelf_name -led-status on`

> A disk shelf has three location LEDs: one on the operator display panel and one on each IOM12 module. Location LEDs remain illuminated for 30 minutes. You can turn them off by entering the same command, but using the off option.

4. If you are removing an entire stack of disk shelves, complete the following substeps; otherwise, go to the next step:
   a. Remove all SAS cables on path A (IOM A) and path B (IOM B).

      This includes controller-to-shelf cables and shelf-to-shelf cables for all disk shelves in the stack you are removing.

   b. Go to step 9.
5. If you are removing one or more disk shelves from a stack (but keeping the stack), recable the path A (IOM A) stack connections to bypass the disk shelves you are removing by completing the applicable set of substeps:

   If you are removing more than one disk shelf in the stack, complete the applicable set of substeps one disk shelf at a time.

> Wait at least 10 seconds before connecting the port. The SAS cable connectors are keyed; when oriented correctly into a SAS port, the connector clicks into place and the disk shelf SAS port LNK LED illuminates green. For disk shelves, you insert a SAS cable connector with the pull tab oriented down (on the underside of the connector).

If you are removing…	Then…
A disk shelf from either end (logical first or last disk shelf) of a stack	a. Remove any shelf-to-shelf cabling from IOM A ports on the disk shelf you are removing and put them aside. b. Unplug any controller-to-stack cabling connected to IOM A ports on the disk shelf you are removing and plug them into the same IOM A ports on the next disk shelf in the stack. The “next” disk shelf can be above or below the disk shelf you are removing depending on which end of the stack you are removing the disk shelf from.

If you are removing…	Then…
A disk shelf from the middle of the stack A disk shelf in the middle of a stack is only connected to other disk shelves—not to any controllers.	a. Remove any shelf-to-shelf cabling from IOM A ports 1 and 2 or from ports 3 and 4 on the disk shelf you are removing and IOM A of the next disk shelf, and then put them aside. b. Unplug the remaining shelf-to-shelf cabling connected to IOM A ports on the disk shelf you are removing and plug them into the same IOM A ports on the next disk shelf in the stack. The “next” disk shelf can be above or below the disk shelf you are removing depending on which IOM A ports (1 and 2 or 3 and 4) you removed the cabling from.

You can refer to the following cabling examples when removing a disk shelf from an end of a stack or the middle of a stack. Note the following about the cabling examples:

- The IOM12/IOM12B modules are arranged side-by-side as in a DS224C or DS212C disk shelf; if you have a DS460C, the IOM12/IOM12B modules are arranged one above the other.
- The stack in each example is cabled with standard shelf-to-shelf cabling, which is used in stacks cabled with multipath HA, tri-path HA, or multipath connectivity.

  You can infer the recabling if your stack is cabled with quad-path HA or quad-path connectivity, which uses double-wide shelf-to-shelf cabling.

- The cabling examples demonstrate recabling one of the paths: path A (IOM A).

  You repeat the recabling for path B (IOM B).

- The cabling example for removing a disk shelf from the end of a stack demonstrates removing the logical last disk shelf in a stack that is cabled with multipath HA or tri-path HA connectivity.

  You can infer the recabling if you are removing the logical first disk shelf in a stack or if your stack has multipath connectivity.

Removing the logical last shelf in a stack: recabling path A (IOM A)

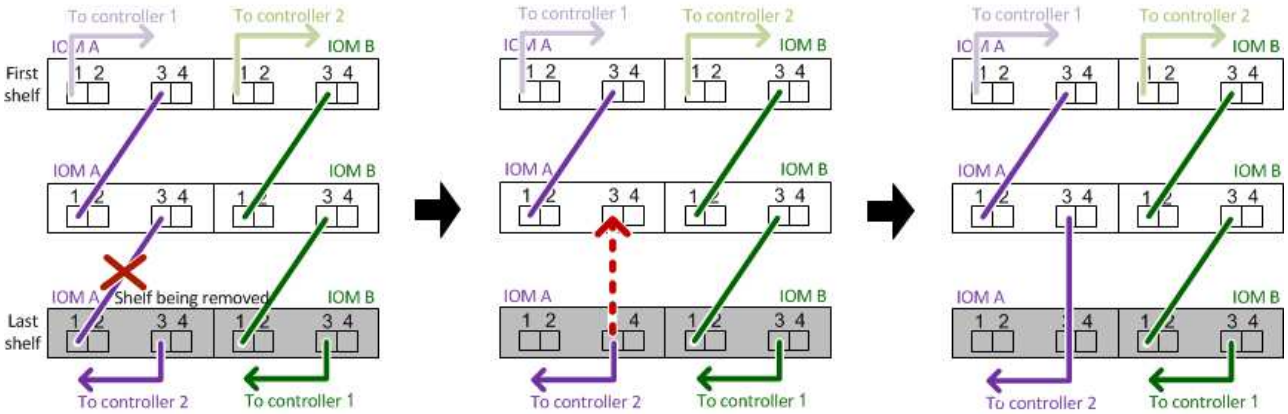

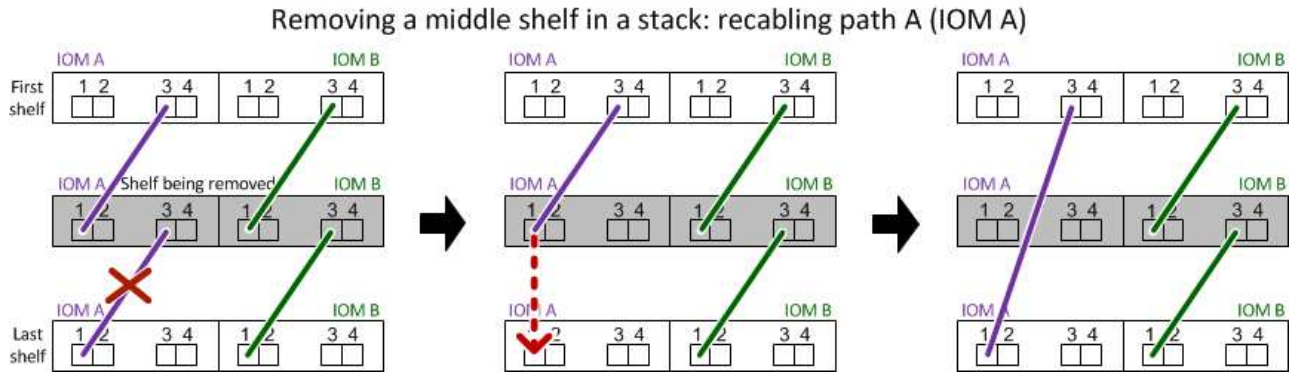

6. Verify that you bypassed the disk shelves you are removing and reestablished the path A (IOM A) stack connections correctly: `storage disk show -port`

   For HA pair configurations, you run this command from the clustershell of either controller. It might take up to a minute for the system to complete discovery.

   The first two lines of output show disk drives with connectivity through both path A and path B. The last two lines of output show disk drives with connectivity through a single-path, path B.

```
cluster::> storage show disk -port

PRIMARY  PORT SECONDARY      PORT TYPE SHELF BAY
-------- ---- ---------      ---- ---- ----- ---
1.20.0   A    node1:6a.20.0  B    SAS  20    0
1.20.1   A    node1:6a.20.1  B    SAS  20    1
1.21.0   B    -              -    SAS  21    0
1.21.1   B    -              -    SAS  21    1
...
```

7. The next step depends on the `storage disk show -port` command output:

If the output shows…	Then…
All disk drives in the stack are connected through path A and path B except for the ones in the disk shelves you disconnected, which are only connected through path B	Go to the next step. You successfully bypassed the disk shelves you are removing and reestablished path A on the remaining disk drives in the stack.
Anything other than the above	Repeat Step 5 and Step 6. You must correct the cabling.

8. Complete the following substeps for the disk shelves (in the stack) you are removing:
   a. Repeat Step 5 through Step 7 for path B.

> When you repeat Step 7 and if you have recabled the stack correctly, you should only see all remaining disk drives connected through path A and path B.

b. Repeat Step 1 to confirm that your system configuration is the same as before you removed one or more disk shelves from a stack.

c. Go to the next step.

9. If when you removed ownership from the disk drives (as part of the preparation for this procedure), you disabled disk ownership automatic assignment, reenable it by entering the following command; otherwise, go to the next step: `storage disk option modify -autoassign on`

   For HA pair configurations, you run the command from the clustershell of both controllers.

10. Power off the disk shelves you disconnected and unplug the power cords from the disk shelves.

11. Remove the disk shelves from the rack or cabinet.

    To make a disk shelf lighter and easier to maneuver, remove the power supplies and I/O modules (IOMs).

    For DS460C disk shelves, a fully loaded shelf can weigh approximately 247 lbs (112 kg); therefore, exercise the following caution when removing a shelf from a rack or cabinet.

    > It is recommended that you use a mechanized lift or four people using the lift handles to safely move a DS460C shelf.

    Your DS460C shipment was packaged with four detachable lift handles (two for each side). To use the lift handles, you install them by inserting the tabs of the handles into the slots in the side of the shelf and pushing up until they click into place. Then, as you slide the disk shelf onto the rails, you detach one set of handles at a time using the thumb latch. The following illustration shows how to attach a lift handle.

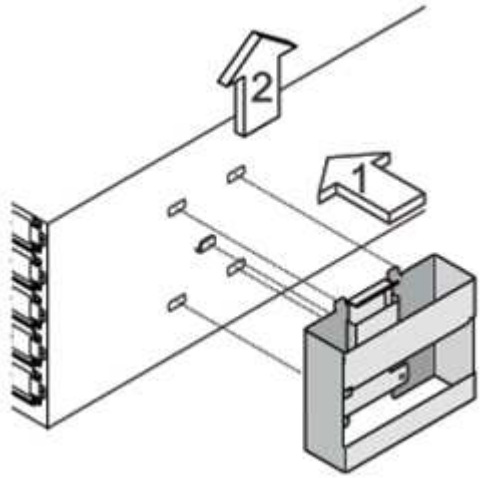

    If you are moving the DS460C shelf to a different part of the data center or transporting it to a different location, see the "Move or transport DS460C shelves" section.

Move or transport DS460C shelves

If you move a DS460C shelf to a different part of the data center or transport the shelf to a different location, you need to remove the drives from the drive drawers to avoid possible damage to the drive drawers and drives.

- If when you installed DS460C shelves as part of your new system installation or shelf hot-add, you saved the drive packaging materials, use these to repackage the drives before moving them.

  If you did not save the packaging materials, you should place drives on cushioned surfaces or use alternate cushioned packaging. Never stack drives on top of each other.

- Before handling drives, wear an ESD wrist strap grounded to an unpainted surface on your storage enclosure chassis.

  If a wrist strap is unavailable, touch an unpainted surface on your storage enclosure chassis before handling a drive.

- You should take steps to handle drives carefully:
  - Always use two hands when removing, installing, or carrying a drive to support its weight.

    Do not place hands on the drive boards exposed on the underside of the drive carrier.

  - Be careful not to bump drives against other surfaces.
  - Drives should be kept away from magnetic devices.

    Magnetic fields can destroy all data on a drive and cause irreparable damage to the drive circuitry.

Monitor disk shelf LEDs - shelves with IOM12/IOM12B modules

You can monitor the health of your disk shelf by understanding the location and status conditions of the LEDs on your disk shelf components.

Operator display panel LEDs

The LEDs on the disk shelf front operator display panel indicate whether your disk shelf is functioning normally or there are problems with the hardware.

The following table describes the three LEDs on the operator display panel used in DS460C, DS224C, and DS212C disk shelves:

LED icon	LED name	State	Description
	Power	Solid green	One or more power supplies are supplying power to the disk shelf.

LED icon	LED name	State	Description
!	Attention	Solid amber	An error occurred with the function of one of more FRUs: the disk shelf, disk drives, IOM12/IOM12B modules, or power supplies. Check event messages to determine corrective action to take.
		Blinking amber	The shelf ID is in a pending state. Power cycle the disk shelf for the shelf ID to take affect.
	Location	Solid blue	The system administrator activated this LED function to aid in physically locating the disk shelf requiring service. The location LED on the operator display panel and both IOM12/IOM12B modules illuminate when this LED function is activated. Location LEDs automatically turn off after 30 minutes.

Depending on your disk shelf model, the operator display panel looks different; however, the three LEDs are arranged in the same way.

The following illustration is of a DS224C disk shelf operator display panel with the end cap on:

IOM12/IOM12B module LEDs

The LEDs on the IOM12/IOM12B module indicate whether the module is functioning normally, whether it is ready for I/O traffic, and whether there are any problems with the hardware.

The following table describes IOM12/IOM12B module LEDs associated with the function of the module and the function of each SAS port on the module.

The IOM12/IOM12B module is used in DS460C, DS224C, and DS212C disk shelves.

LED icon	LED name	State	Description
!	Attention	Solid amber	IOM12/IOM12B module function: An error occurred with the function of the IOM12/IOM12B module. SAS port function: Less than all four SAS lanes established a link (with either an adapter or another disk shelf). Check event messages to determine corrective action to take.
LNK	Port link	Solid green	One or more of the four SAS lanes established a link (with either an adapter or another disk shelf).

LED icon	LED name	State	Description
	Location	Solid blue	The system administrator activated this LED function to aid in physically locating the disk shelf with the failed IOM12/IOM12B module. The location LED on the operator display panel and both IOM12/IOM12B modules illuminate when this LED function is activated. Location LEDs automatically turn off after 30 minutes.

The following illustration is for an IOM12 module:

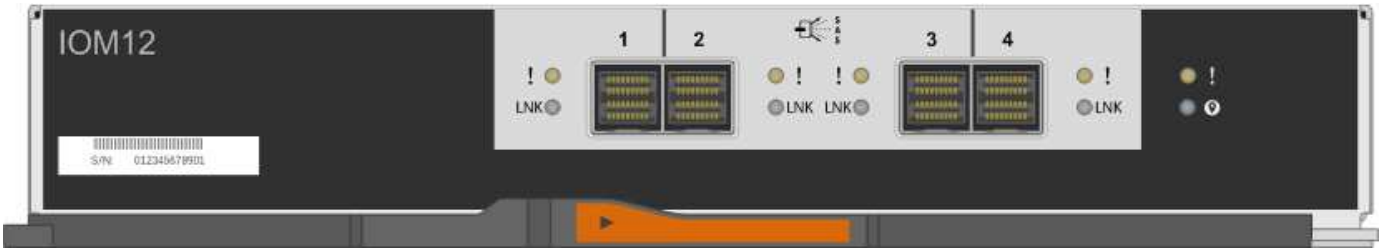

The IOM12B modules are distinguished by a blue stripe and an "IOM12B" label:

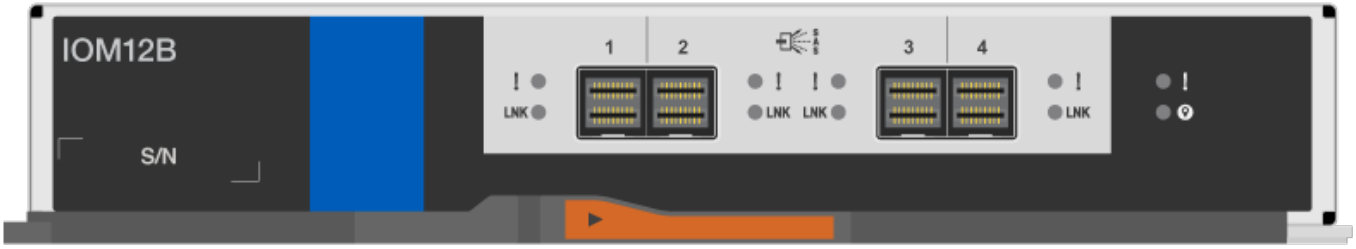

Power supply LEDs

The LEDs on the power supply indicate whether the power supply is functioning normally or there are hardware problems.

The following table describes the two LEDs on power supplies used in DS460C, DS224C, and DS212C disk shelves:

LED icon	LED name	State	Description
	Power	Solid green	The power supply is functioning correctly.
		Off	The power supply failed, the AC switch is turned off, the AC power cord is not properly installed, or electricity is not being properly supplied to the power supply. Check event messages to determine corrective action to take.
!	Attention	Solid amber	An error occurred with the function of the power supply. Check event messages to determine corrective action to take.

Depending on your disk shelf model, power supplies can be different, dictating the location of the two LEDs.

The following illustration is for a power supply used in a DS460C disk shelf.

The two LED icons act as the labels and LEDs, meaning the icons themselves illuminate—there are no adjacent LEDs.

The following illustration is for a power supply used in a DS224C or DS212C disk shelf:

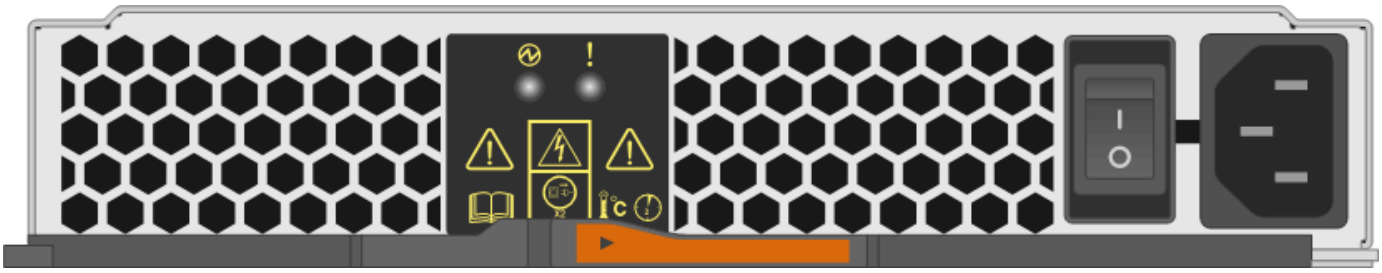

Fan LEDs on DS460C disk shelves

The LEDs on the DS460C fans indicate whether the fan is functioning normally or there are hardware problems.

The following table describes the LEDs on fans used in DS460C disk shelves:

Item	LED name	State	Description
1	Attention	Solid amber	An error occurred with the function of the fan. Check event messages to determine corrective action to take.

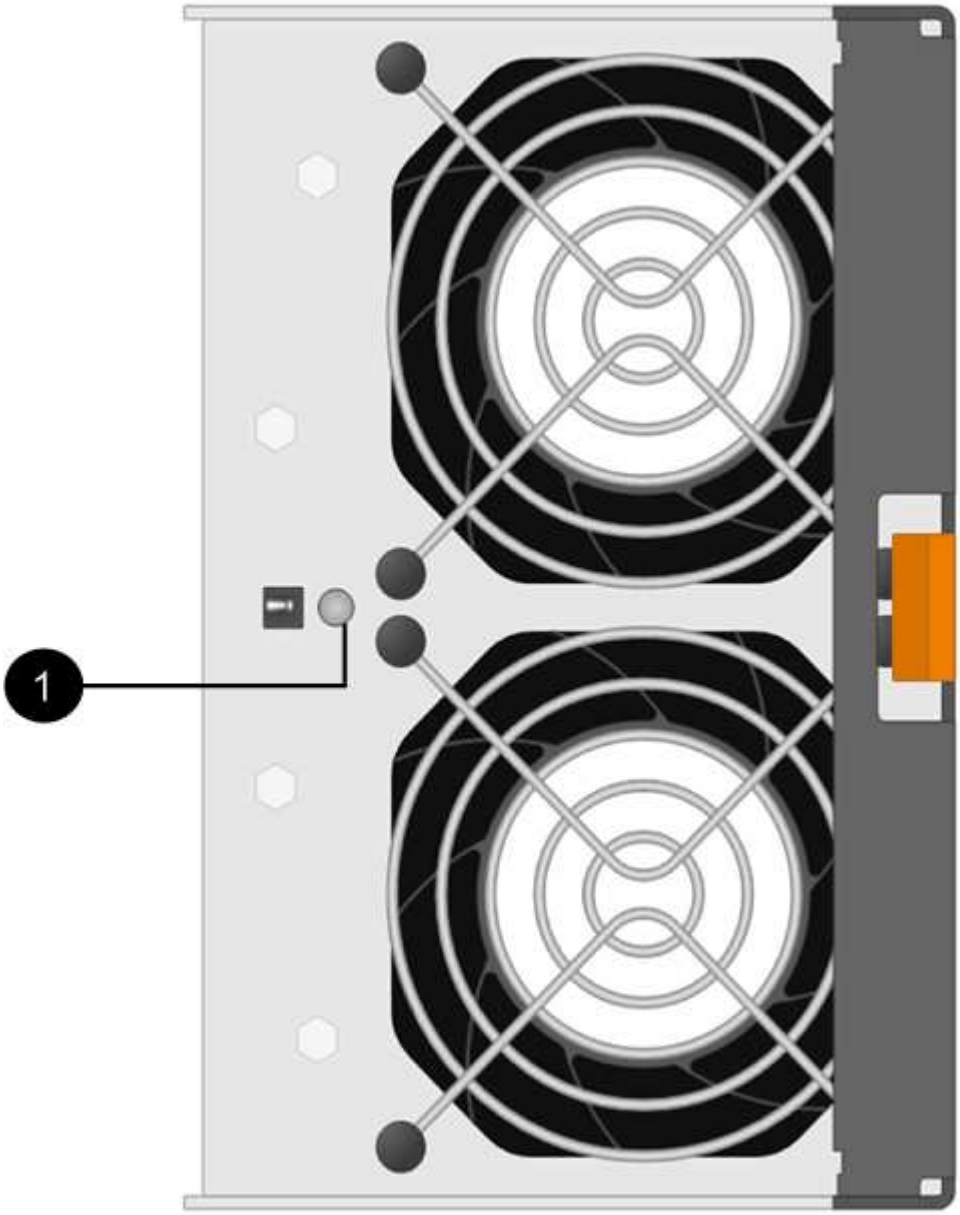

Disk drive LEDs

The LEDs on a disk drive indicates whether it is functioning normally or there are problems with the hardware.

Disk drive LEDs for DS224C and DS212C disk shelves

The following table describes the two LEDs on the disk drives used in DS224C and DS212C disk shelves:

Callout	LED name	State	Description
1	Activity	Solid green	The disk drive has power.
		Blinking green	The disk drive has power and I/O operations are in progress.
2	Attention	Solid amber	An error occurred with the function of the disk drive. Check event messages to determine corrective action to take.

Depending on your disk shelf model, disk drives are arranged vertically or horizontally in the disk shelf, dictating the location of the two LEDs.

The following illustration is for a disk drive used in a DS224C disk shelf.

DS224C disk shelves use 2.5-inch disk drives arranged vertically in the disk shelf.

The following illustration is for a disk drive used in a DS212C disk shelf.

DS212C disk shelves use 3.5-inch disk drives or 2.5-inch disk drives in carriers arranged horizontally in the disk shelf.

Disk drive LEDs for DS460C disk shelves

The following illustration and table describes the drive activity LEDs on the drive drawer and their operational states:

Location	LED	Status indicator	Description
1	Attention: Drawer attention for each drawer	Solid amber	A component within the drive drawer requires operator attention.
		Off	No drive or other component in the drawer requires attention and no drive in the drawer has an active locate operation.
		Blinking amber	A locate drive operation is active for any drive within the drawer.
2-13	Activity: Drive activity for drives 0 through 11 in the drive drawer	Green	The power is turned on and the drive is operating normally.
		Blinking green	The drive has power, and I/O operations are in progress.
		Off	The power is turned off.

When the drive drawer is open, an attention LED can be seen in front of each drive.

1	Attention LED light on

Replace a fan module in a DS460C disk shelf - shelves with IOM12/IOM12B modules

Each DS460C drive shelf includes two fan modules. If a fan module fails, you must replace it as soon as possible to ensure that the shelf has adequate cooling. When you remove the failed fan module, you do not have to turn off power to your disk shelf.

About this task

You must ensure that you remove and replace the fan module within 30 minutes to prevent the system from overheating.

Steps

1. Put on antistatic protection.
2. Unpack the new fan module, and place it on a level surface near the shelf.

   Save all packing material for use when returning the failed fan.

3. From the back of the disk shelf, look at the Attention LEDs to locate the fan module you need to remove.

   You must replace the fan module that has its Attention LED on.

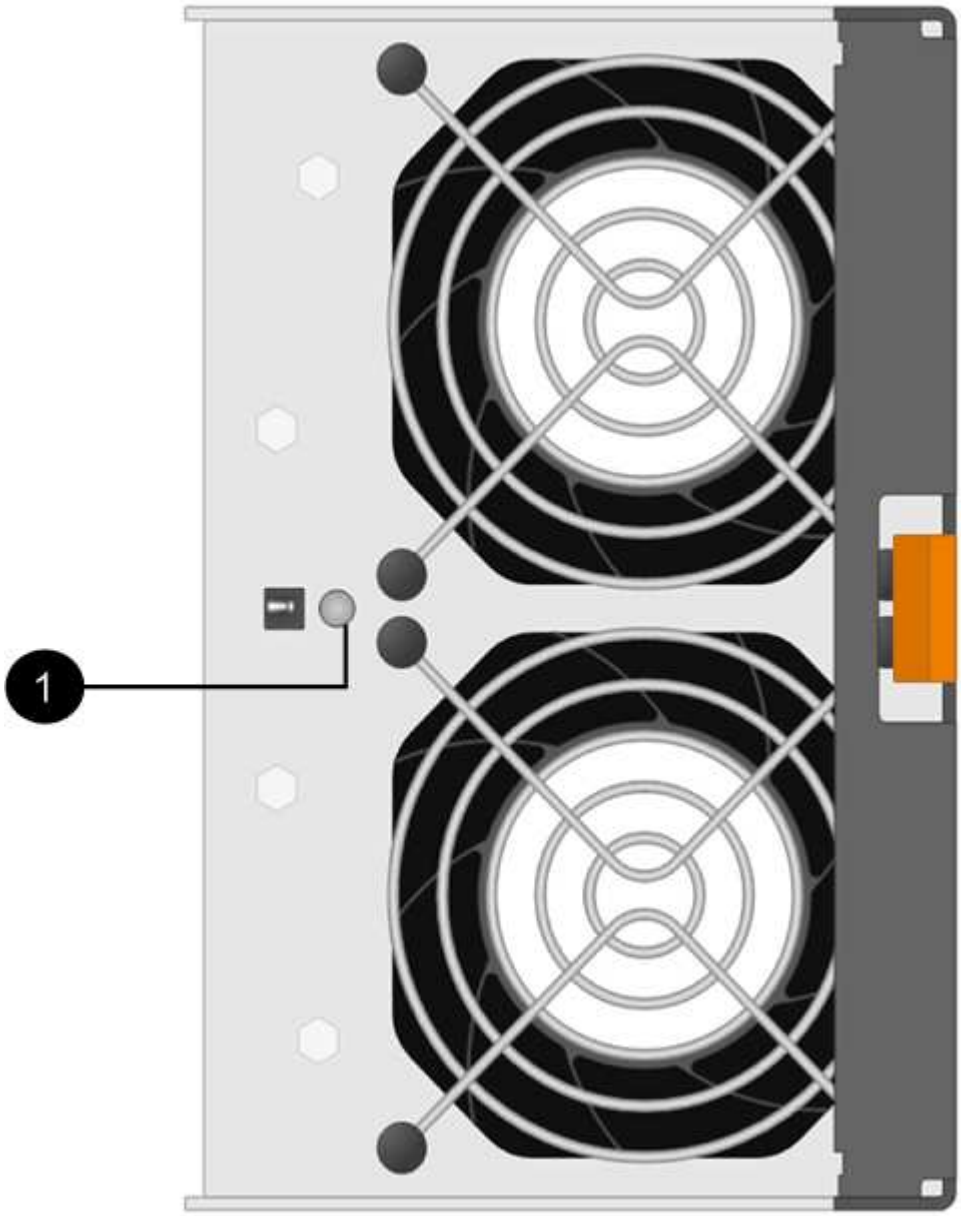

Item	LED name	State	Description
1	Attention	Solid amber	The fan has a fault

4. Press the orange tab to release the fan module handle.

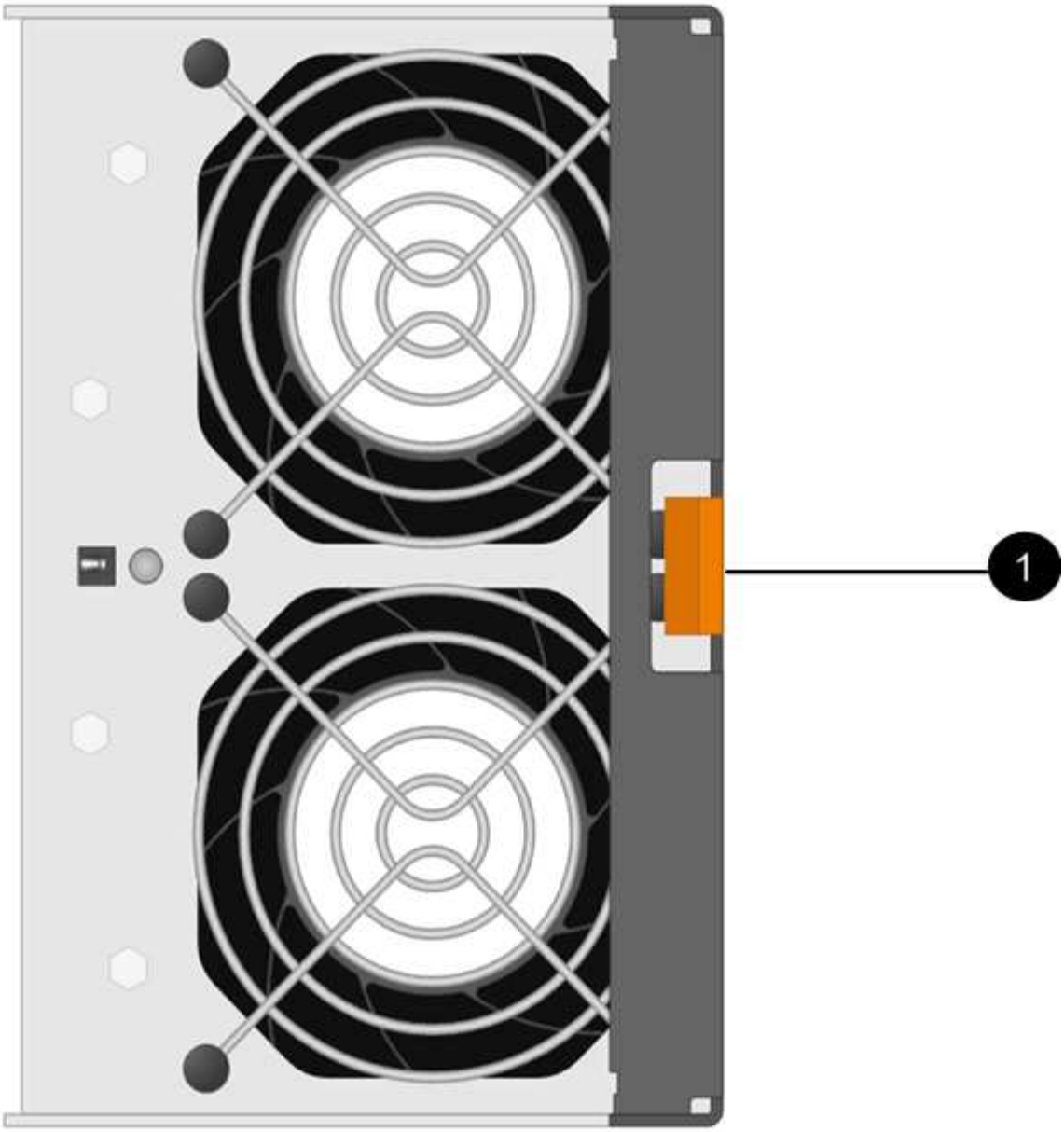

1	Tab that you press to release the fan module handle

5. Use the fan module handle to pull the fan module out of the shelf.

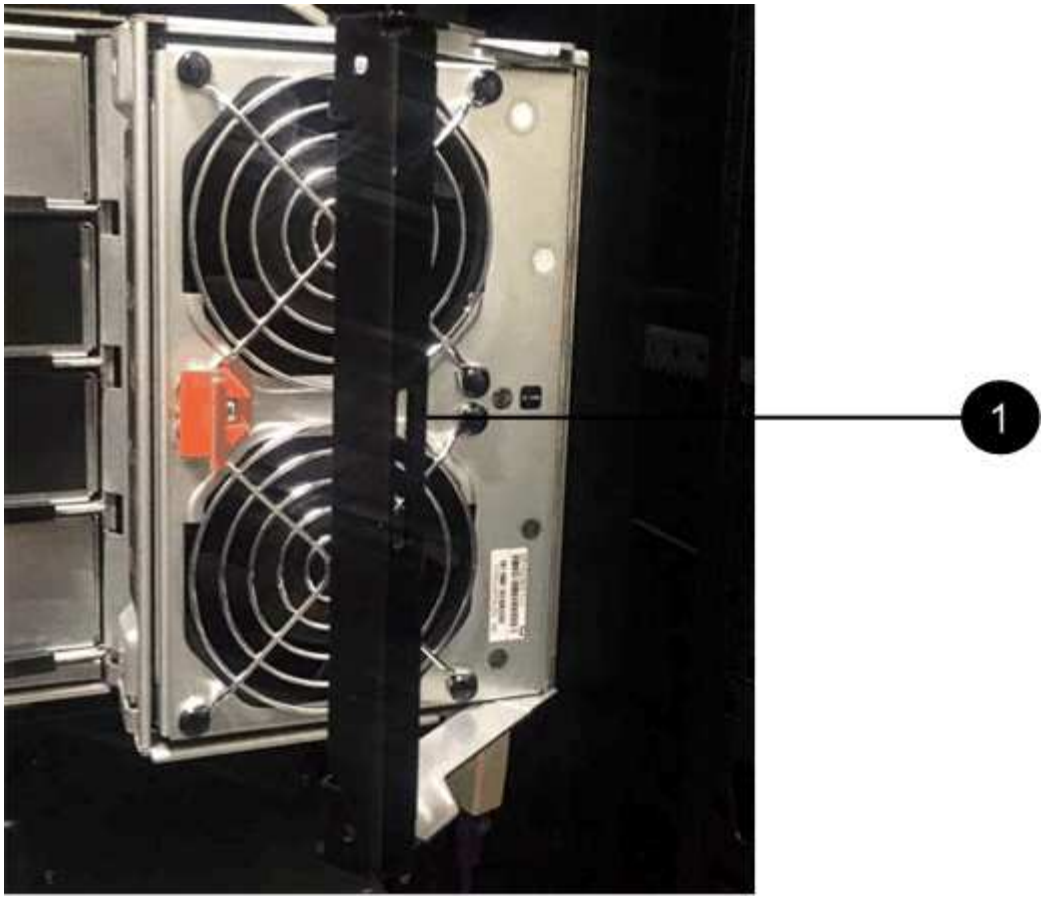

1	Handle to pull the fan module out

6. Slide the replacement fan module all the way into the shelf, moving the fan module handle to the side until it latches with the orange tab.
7. Check the amber Attention LED on the new fan module.

> After you replace the fan module, the Attention LED stays on (solid amber) while the firmware checks that the fan module was installed correctly. The LED goes off after this process is complete.

8. Return the failed part to NetApp, as described in the RMA instructions shipped with the kit.

   Contact technical support at NetApp Support, 888-463-8277 (North America), 00-800-44-638277 (Europe), or +800-800-80-800 (Asia/Pacific) if you need the RMA number.

Hot-swap or replace an IOM12/IOM12B module - shelves with IOM12/IOM12B modules

Your system configuration determines whether you can perform a nondisruptive shelf IOM hot-swap or a disruptive shelf IOM replacement when a shelf IOM fails.

Before you begin

All other components in the system—including the other IOM12/IOM12B module—must be functioning

properly.

About this task

- This procedure applies to shelves having IOM12 modules and shelves having IOM12B modules.

> This procedure is for like-for-like shelf IOM hot-swaps or replacements. This means you can only replace an IOM12 module with another IOM12 module or replace an IOM12B module with another IOM12B module. (Your shelf can have two IOM12 modules or have two IOM12B modules.)

- The IOM12 modules and the IOM12B modules can be distinguished by their appearance:

  The IOM12 modules are distinguished by an "IOM12" label:

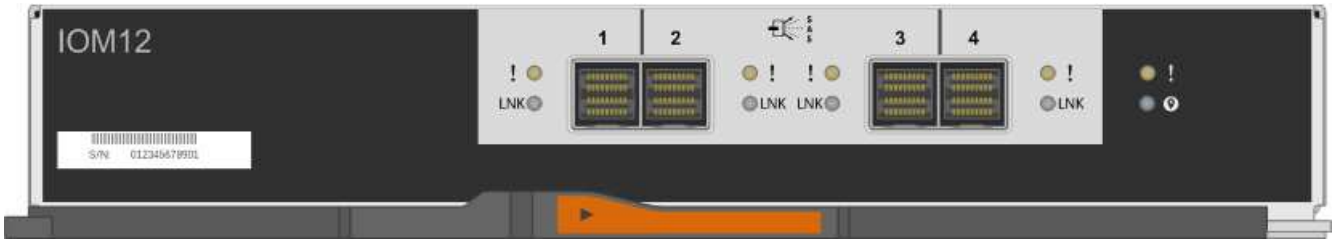

  The IOM12B modules are distinguished by a blue stripe and an "IOM12B" label:

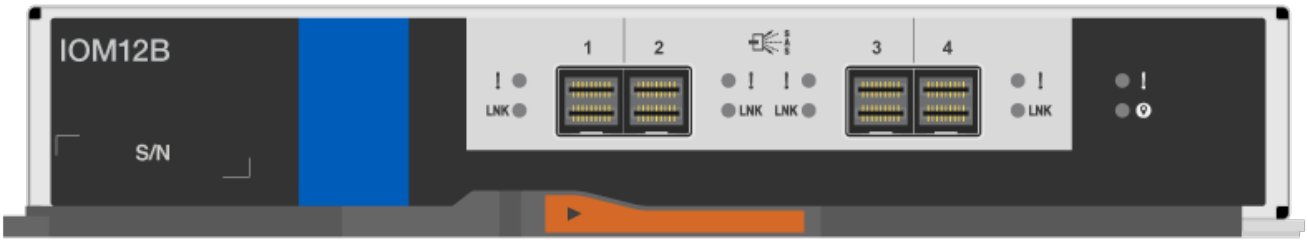

- For multipathed (multipath HA or multipath), tri-path HA, and quad-pathed (quad-path HA or quad-path) configurations, you can hot-swap a shelf IOM (nondisruptively replace a shelf IOM in a system that is powered on and serving data—I/O is in progress).
- For FAS2600 series and FAS2700 series single-path HA configurations, you must perform a takeover and giveback operation to replace a shelf IOM in a system that is powered on and serving data—I/O is in progress.
- For FAS2600 series single-path configurations, you must halt your system to replace a shelf IOM.

> If you attempt to hot-swap a shelf IOM on a disk shelf with a single-path connection, you will lose all access to the disk drives in the disk shelf as well as any disk shelves beneath. You could also bring down your entire system.

- The best practice is to have the current versions of disk shelf (IOM) firmware and disk drive firmware on your system before adding new disk shelves, shelf FRU components, or SAS cables.

  Current versions of firmware can be found on the NetApp Support Site.

  NetApp Downloads: Disk Shelf Firmware

  NetApp Downloads: Disk Drive Firmware

- Disk shelf (IOM) firmware is automatically updated (nondisruptively) on a new shelf IOM with a non-current firmware version.

  Shelf IOM firmware checks occur every ten minutes. An IOM firmware update can take up to 30 minutes.

- If needed, you can turn on the disk shelf's location (blue) LEDs to aid in physically locating the affected disk shelf: `storage shelf location-led modify -shelf-name shelf_name -led-status on`

  A disk shelf has three location LEDs: one on the operator display panel and one on each shelf IOM. Location LEDs remain illuminated for 30 minutes. You can turn them off by entering the same command, but using the off option.

- If needed, you can refer to the Monitoring disk shelf LEDs section for information about the meaning and location of disk shelf LEDs on the operator display panel and FRU components.

Steps

1. Properly ground yourself.
2. Unpack the new shelf IOM and set it on a level surface near the disk shelf.

   Save all packaging materials for use when returning the failed shelf IOM.

3. Physically identify the failed shelf IOM from the system console warning message and the illuminated attention (amber) LED on the failed shelf IOM.
4. Perform one of the following actions based on the type of configuration you have:

If you have a…	Then…
Multipath HA, tri-path HA, multipath, quad-path HA, or quad-path configuration	Go to the next step.
FAS2600 series and FAS2700 series single-path HA configuration	a. Determine the target node (the node the failed shelf IOM belongs to). IOM A belongs to Controller 1. IOM B belongs to Controller 2. b. Take over the target node: `storage failover takeover -bynode partner HA node`
FAS2600 series single-path configuration	a. Shut down the system from the system console: `halt` b. Verify that your system halted by checking the storage system console.

5. Disconnect the cabling from the shelf IOM that you are removing.

   Make note of the shelf IOM ports each cable is connected to.

6. Press the orange latch on the shelf IOM cam handle until it releases, and then open the cam handle fully to release the shelf IOM from the mid plane.

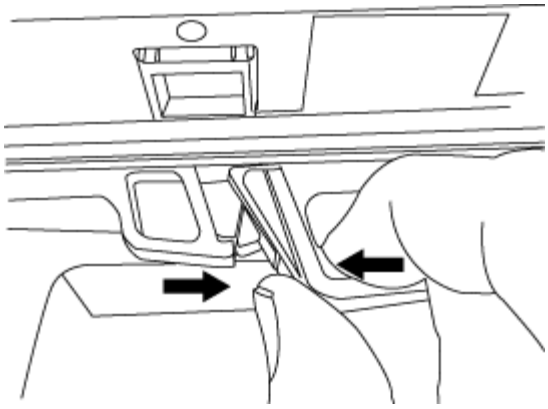

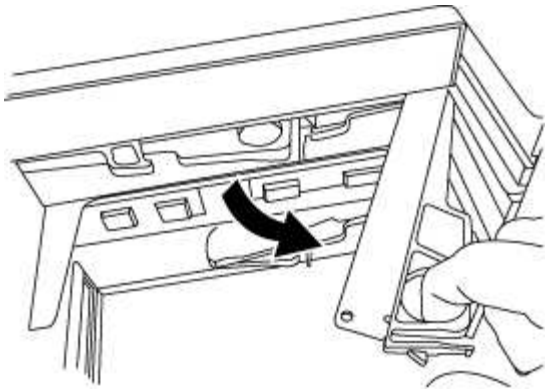

7. Use the cam handle to slide the shelf IOM out of the disk shelf.

   When handling a shelf IOM, always use two hands to support its weight.

8. Wait at least 70 seconds after removing the shelf IOM before you install the new shelf IOM.

   Waiting at least 70 seconds enables the driver to register the shelf ID correctly.

9. Using two hands, with the cam handle of the new shelf IOM in the open position, support and align the edges of the new shelf IOM with the opening in the disk shelf, and then firmly push the new shelf IOM until it meets the mid plane.

   > Do not use excessive force when sliding the shelf IOM into the disk shelf; you might damage the connectors.

10. Close the cam handle so that the latch clicks into the locked position and the shelf IOM is fully seated.
11. Reconnect the cabling.

    The SAS cable connectors are keyed; when oriented correctly into an IOM port, the connector clicks into place and the IOM port LNK LED illuminates green. You insert a SAS cable connector into an IOM port with the pull tab oriented down (on the underside of the connector).

12. Perform one of the following actions based on the type of configuration you have:

If you have a…	Then…
Multipath HA, tri-path HA, multipath, quad-path HA, or quad-path configuration	Go to the next step.

If you have a…	Then…
FAS2600 series and FAS2700 series single-path HA configuration	Give back the target node: `storage failover giveback -fromnode partner_HA_node`
FAS2600 series single-path configuration	Reboot your system.

13. Verify that the shelf IOM port links have been established.

    For each module port that you cabled, the LNK (green) LED illuminates when one or more of the four SAS lanes have established a link (with either an adapter or another disk shelf).

14. Return the failed part to NetApp, as described in the RMA instructions shipped with the kit.

    Contact technical support at NetApp Support, 888-463-8277 (North America), 00-800-44-638277 (Europe), or +800-800-80-800 (Asia/Pacific) if you need the RMA number or additional help with the replacement procedure.

Hot-swap a power supply - shelves with IOM12/IOM12B modules

You can hot-swap a failed power supply in a DS460C, DS224C, or DS212C disk shelf.

Before you begin

All other components in the system—including the other power supply—must be functioning properly.

About this task

- If you are replacing more than one power supply, you must do so one at a time so that the disk shelf maintains power.
- You must replace a power supply within two minutes of removal to minimize disruption to the disk shelf's airflow.
- Always use two hands when removing, installing, or carrying a power supply to support its weight.
- The best practice is to have the current versions of disk shelf (IOM) firmware and disk drive firmware on your system before adding new disk shelves, shelf FRU components, or SAS cables.

  Current versions of firmware can be found on the NetApp Support Site.

  NetApp Downloads: Disk Shelf Firmware

  NetApp Downloads: Disk Drive Firmware

- If needed, you can turn on the disk shelf's location (blue) LEDs to aid in physically locating the affected disk shelf: `storage shelf location-led modify -shelf-name shelf_name -led-status on`

  A disk shelf has three location LEDs: one on the operator display panel and one on each shelf IOM. Location LEDs remain illuminated for 30 minutes. You can turn them off by entering the same command, but using the off option.

- If needed, you can refer to the Monitoring disk shelf LEDs section for information about the meaning and location of disk shelf LEDs on the operator display panel and FRU components.

Steps

1. Properly ground yourself.
2. Unpack the new power supply and set it on a level surface near the shelf.

   Save all packing materials for use when returning the failed power supply.

3. Physically identify the failed power supply from the system console warning message and the illuminated attention (amber) LED on the power supply.
4. Turn off the failed power supply and disconnect the power cable:
   a. Turn off the power switch on the power supply.
   b. Open the power cord retainer and unplug the power cord from the power supply.
   c. Unplug the power cord from the power source.
5. Press the orange latch on the power supply cam handle until it releases, and then open the cam handle to fully release the power supply from the mid plane.

   The following illustration is for a power supply used in a DS224C or DS212C disk shelf; however, the latch operates the same way for power supplies used in DS460C disk shelves.

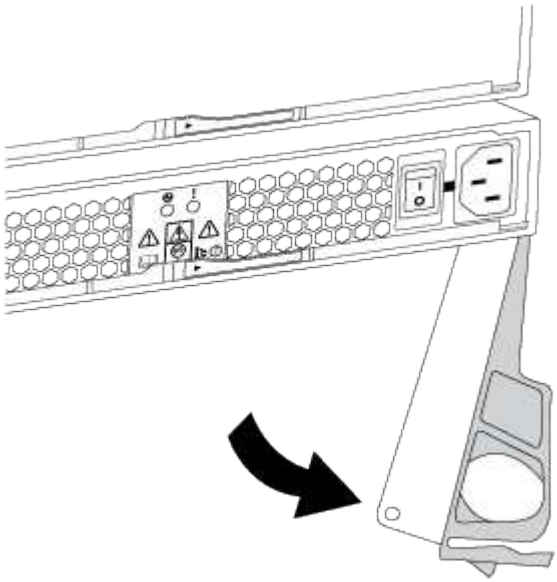

6. Use the cam handle to slide the power supply out of the disk shelf.

   If you have a DS224C or DS212C disk shelf, as you remove the power supply, a flap swings into place to block the empty bay, helping to maintain air flow and cooling.

   When handling a power supply, always use two hands to support its weight.

7. Make sure that the on/off switch of the new power supply is in the Off position.
8. Using two hands, with the cam handle of the new power supply in the open position, support and align the edges of the new power supply with the opening in the disk shelf, and then firmly push the new power supply until it meets the mid plane.

> Do not use excessive force when sliding the power supply into the disk shelf; you might damage the connectors.

9. Close the cam handle so that the latch clicks into the locked position and the power supply is fully seated.
10. Reconnect the power supply cable and turn on the new power supply:
    a. Reconnect the power cord to the power source.
    b. Reconnect the power cord to the power supply and secure the power cord with the power cord retainer.
    c. Turn on the power switch.

       The power supply's power (green) LED and attention (amber) LED illuminate, and then within 40 seconds, the attention (amber) LED turns off.
11. Return the failed part to NetApp, as described in the RMA instructions shipped with the kit.

    Contact technical support at NetApp Support, 888-463-8277 (North America), 00-800-44-638277 (Europe), or +800-800-80-800 (Asia/Pacific) if you need the RMA number or additional help with the replacement procedure.

Copyright information

Copyright © 2024 NetApp, Inc. All Rights Reserved. Printed in the U.S. No part of this document covered by copyright may be reproduced in any form or by any means—graphic, electronic, or mechanical, including photocopying, recording, taping, or storage in an electronic retrieval system—without prior written permission of the copyright owner.

Software derived from copyrighted NetApp material is subject to the following license and disclaimer:

THIS SOFTWARE IS PROVIDED BY NETAPP “AS IS” AND WITHOUT ANY EXPRESS OR IMPLIED WARRANTIES, INCLUDING, BUT NOT LIMITED TO, THE IMPLIED WARRANTIES OF MERCHANTABILITY AND FITNESS FOR A PARTICULAR PURPOSE, WHICH ARE HEREBY DISCLAIMED. IN NO EVENT SHALL NETAPP BE LIABLE FOR ANY DIRECT, INDIRECT, INCIDENTAL, SPECIAL, EXEMPLARY, OR CONSEQUENTIAL DAMAGES (INCLUDING, BUT NOT LIMITED TO, PROCUREMENT OF SUBSTITUTE GOODS OR SERVICES; LOSS OF USE, DATA, OR PROFITS; OR BUSINESS INTERRUPTION) HOWEVER CAUSED AND ON ANY THEORY OF LIABILITY, WHETHER IN CONTRACT, STRICT LIABILITY, OR TORT (INCLUDING NEGLIGENCE OR OTHERWISE) ARISING IN ANY WAY OUT OF THE USE OF THIS SOFTWARE, EVEN IF ADVISED OF THE POSSIBILITY OF SUCH DAMAGE.

NetApp reserves the right to change any products described herein at any time, and without notice. NetApp assumes no responsibility or liability arising from the use of products described herein, except as expressly agreed to in writing by NetApp. The use or purchase of this product does not convey a license under any patent rights, trademark rights, or any other intellectual property rights of NetApp.

The product described in this manual may be protected by one or more U.S. patents, foreign patents, or pending applications.

LIMITED RIGHTS LEGEND: Use, duplication, or disclosure by the government is subject to restrictions as set forth in subparagraph (b)(3) of the Rights in Technical Data -Noncommercial Items at DFARS 252.227-7013 (FEB 2014) and FAR 52.227-19 (DEC 2007).

Data contained herein pertains to a commercial product and/or commercial service (as defined in FAR 2.101) and is proprietary to NetApp, Inc. All NetApp technical data and computer software provided under this Agreement is commercial in nature and developed solely at private expense. The U.S. Government has a non-exclusive, non-transferrable, nonsublicensable, worldwide, limited irrevocable license to use the Data only in connection with and in support of the U.S. Government contract under which the Data was delivered. Except as provided herein, the Data may not be used, disclosed, reproduced, modified, performed, or displayed without the prior written approval of NetApp, Inc. United States Government license rights for the Department of Defense are limited to those rights identified in DFARS clause 252.227-7015(b) (FEB 2014).

Trademark information

NETAPP, the NETAPP logo, and the marks listed at http://www.netapp.com/TM are trademarks of NetApp, Inc. Other company and product names may be trademarks of their respective owners.