Maintain

Install and maintain

NetApp
March 22, 2024

This PDF was generated from https://docs.netapp.com/us-en/ontap-systems/sas3/service-hot-swap-drive-ds224c-ds212c.html on March 22, 2024. Always check docs.netapp.com for the latest.

Table of Contents

Maintain . . . 1
Hot-swap a disk drive in a DS224C or DS212C disk shelf - shelves with IOM12/IOM12B modules . . . 1
Hot-swap a disk drive in a DS460C disk shelf - shelves with IOM12/IOM12B modules . . . 5
Replace a drive drawer in a DS460C disk shelf - shelves with IOM12/IOM12B modules . . . 12
Drive shelf . . . 31
Replace a fan module in a DS460C disk shelf - shelves with IOM12/IOM12B modules . . . 48
Hot-swap or replace an IOM12/IOM12B module - shelves with IOM12/IOM12B modules . . . 51
Hot-swap a power supply - shelves with IOM12/IOM12B modules . . . 55

Maintain

Hot-swap a disk drive in a DS224C or DS212C disk shelf - shelves with IOM12/IOM12B modules

You can hot-swap a failed disk drive in a DS224C or DS212C disk shelf.

Before you begin

- The disk drive that you are installing must be supported by the DS224C or DS212C disk shelf.

  NetApp Hardware Universe

- All other components in the system must be functioning properly; if not, contact technical support.
- The disk drive you are removing must be failed.

  You can verify the disk drive is failed by running the `storage disk show -broken` command. The failed disk drive appears in the list of failed disk drives. If it does not, you should wait, and run the command again.

  > Depending on the disk drive type and capacity, it can take up to several hours for the disk drive to appear in the list of failed disk drives.

- If you are replacing a self-encrypting disk (SED), you must follow the instructions for Replacing an SED in the ONTAP documentation for your version of ONTAP.

  Instructions in the ONTAP documentation describe additional steps you must perform before and after replacing an SED.

  NetApp encryption overview with the CLI

About this task

- You should take steps to avoid electrostatic discharge (ESD):
  - Keep the disk drive in the ESD bag until you are ready to install it.
  - Open the ESD bag by hand or cut the top off with a pair of scissors.

    > Do not insert a metal tool or knife into the ESD bag.

  - Always wear an ESD wrist strap grounded to an unpainted surface on your storage enclosure chassis.

    If a wrist strap is unavailable, touch an unpainted surface on your storage enclosure chassis before handling the disk drive.

- You should take steps to handle disk drives carefully:
  - Always use two hands when removing, installing, or carrying a disk drive to support its weight.

    > Do not place hands on the disk drive boards exposed on the underside of the disk drive carrier.

- You should place disk drives on cushioned surfaces, and never stack disk drives on top of each other.
- You should be careful not to bump disk drives against other surfaces.

- Disk drives should be kept away from magnetic devices.

  > Magnetic fields can destroy all data on the disk drive and cause irreparable damage to the disk drive circuitry.

- The best practice is to have the current version of the Disk Qualification Package (DQP) installed before hot-swapping a disk drive.

  Having the current version of the DQP installed allows your system to recognize and utilize newly qualified disk drives; therefore, avoiding system event messages about having non-current disk drive information. You also avoid the possible prevention of disk partitioning because disk drives are not recognized. The DQP also notifies you of non-current disk drive firmware.

  NetApp Downloads: Disk Qualification Package

- The best practice is to have the current versions of disk shelf (IOM) firmware and disk drive firmware on your system before adding new disk shelves, shelf FRU components, or SAS cables.

  Current versions of firmware can be found on the NetApp Support Site.

  NetApp Downloads: Disk Shelf Firmware

  NetApp Downloads: Disk Drive Firmware

- Disk drive firmware is automatically updated (nondisruptively) on new disk drives with non current firmware versions.

  > Disk drive firmware checks occur every two minutes.

- If needed, you can turn on the disk shelf's location (blue) LEDs to aid in physically locating the affected disk shelf: `storage shelf location-led modify -shelf-name shelf_name -led-status on`

  A disk shelf has three location LEDs: one on the operator display panel and one on each shelf IOM. Location LEDs remain illuminated for 30 minutes. You can turn them off by entering the same command, but using the off option.

- If needed, you can refer to the Monitoring disk shelf LEDs section for information about the meaning and location of disk shelf LEDs on the operator display panel and FRU components.

Steps

1. If you want to manually assign disk ownership for the replacement disk drive, you need to disable automatic drive assignment if it is enabled; otherwise, go to the next step.

   > You need to manually assign disk ownership if disk drives in the stack are owned by both controllers in an HA pair.

   > You manually assign disk ownership and then reenable automatic drive assignment later in this procedure.

   a. Verify if automatic drive assignment is enabled:`storage disk option show`

If you have an HA pair, you can enter the command at the console of either controller.

If automatic drive assignment is enabled, the output shows “on” (for each controller) in the “Auto Assign” column.

b. If automatic drive assignment is enabled, you need to disable it:`storage disk option modify -node node_name -autoassign off`

You need to disable automatic drive assignment on both controllers in an HA pair.

2. Properly ground yourself.
3. Unpack the new disk drive, and set it on a level surface near the disk shelf.

   Save all packaging materials for use when returning the failed disk drive.

   NetApp requires that all returned disk drives be in a ESD-rated bag.

4. Physically identify the failed disk drive from the system console warning message and the illuminated attention (amber) LED on the disk drive.

   The activity (green) LED on a failed disk drive can be illuminated (solid), which indicates the disk drive has power, but should not be blinking, which indicates I/O activity. A failed disk drive has no I/O activity.

5. Press the release button on the disk drive face, and then pull the cam handle to its fully open position to release the disk drive from the mid plane.

   When you press the release button, the cam handle on the disk drive springs open partially.

   Disk drives in a DS212C disk shelf are arranged horizontally with the release button located on the left of the disk drive face. Disk drives in a DS224C disk shelf are arranged vertically with the release button located at the top of the disk drive face.

   The following shows disk drives in a DS212C disk shelf:

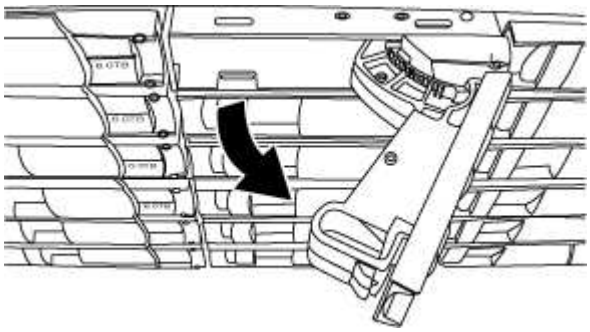

   The following shows disk drives in a DS224C disk shelf:

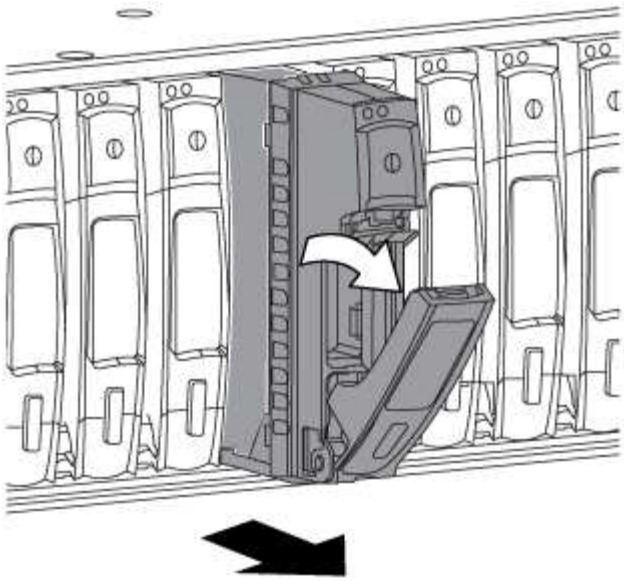

6. Slide out the disk drive slightly to allow the disk to safely spin down, and then remove the disk drive from the disk shelf.

   An HDD can take up to one minute to safely spin down.

   When handling a disk drive, always use two hands to support its weight.

7. Using two hands, with the cam handle in the open position, insert the replacement disk drive into the disk shelf, firmly pushing until the disk drive stops.

   Wait a minimum of 10 seconds before inserting a new disk drive. This allows the system to recognize that a disk drive was removed.

   Do not place hands on the disk drive boards that are exposed on the underside of the disk carrier.

8. Close the cam handle so that the disk drive is fully seated into the mid plane and the handle clicks into place.

   Be sure to close the cam handle slowly so that it aligns correctly with the face of the disk drive.

9. If you are replacing another disk drive, repeat Steps 3 through 8.
10. Verify the disk drive's activity (green) LED is illuminated.

    When the disk drive's activity LED is solid green, it means the disk drive has power. When the disk drive's activity LED is blinking, it means the disk drive has power and I/O is in progress. If the disk drive firmware is automatically updating, the LED will be blinking.

11. If you disabled automatic drive assignment in Step 1, manually assign disk ownership, and then reenable automatic drive assignment if needed:

    a. Display all unowned disks:`storage disk show -container-type unassigned`

    b. Assign each disk:`storage disk assign -disk` *`disk_name`* `-owner` *`owner_name`*

       You can use the wildcard character to assign more than one disk at once.

c. Reenable automatic drive assignment if needed:`storage disk option modify -node node_name -autoassign on`

   You need to reenable automatic drive assignment on both controllers in an HA pair.

12. Return the failed part to NetApp, as described in the RMA instructions shipped with the kit.

    Contact technical support at NetApp Support, 888-463-8277 (North America), 00-800-44-638277 (Europe), or +800-800-80-800 (Asia/Pacific) if you need the RMA number or additional help with the replacement procedure.

Hot-swap a disk drive in a DS460C disk shelf - shelves with IOM12/IOM12B modules

You can hot-swap a failed disk drive in a DS460C disk shelf.

Before you begin

- The replacement disk drive must be supported by the DS460C disk shelf.

  NetApp Hardware Universe

- All other components in the system must be functioning properly; if not, contact technical support.
- The disk drive you are removing must be failed.

  You can verify the disk drive is failed by running the `storage disk show -broken` command. The failed disk drive appears in the list of failed disk drives. If it does not, you should wait, and run the command again.

  > Depending on the disk drive type and capacity, it can take up to several hours for the disk drive to appear in the list of failed disk drives.

- If you are replacing a self-encrypting disk (SED), you must follow the instructions for Replacing an SED in the ONTAP documentation for your version of ONTAP.

  Instructions in the ONTAP documentation describe additional steps you must perform before and after replacing an SED.

  NetApp encryption overview with the CLI

About this task

- You should take steps to avoid electrostatic discharge (ESD):
  - Keep the disk drive in the ESD bag until you are ready to install it.
  - Open the ESD bag by hand or cut the top off with a pair of scissors.

    > Do not insert a metal tool or knife into the ESD bag.

  - Always wear an ESD wrist strap grounded to an unpainted surface on your storage enclosure chassis.

    If a wrist strap is unavailable, touch an unpainted surface on your storage enclosure chassis before handling the disk drive.

- You should take steps to handle disk drives carefully:
  - Always use two hands when removing, installing, or carrying a disk drive to support its weight.

    > Do not place hands on the disk drive boards exposed on the underside of the disk drive carrier.

  - You should place disk drives on cushioned surfaces, and never stack disk drives on top of each other.
  - You should be careful not to bump disk drives against other surfaces.
- Disk drives should be kept away from magnetic devices.

  > Magnetic fields can destroy all data on the disk drive and cause irreparable damage to the disk drive circuitry.

- The best practice is to have the current version of the Disk Qualification Package (DQP) installed before hot-swapping a disk drive.

  Having the current version of the DQP installed allows your system to recognize and utilize newly qualified disk drives; therefore, avoiding system event messages about having non-current disk drive information. You also avoid the possible prevention of disk partitioning because disk drives are not recognized. The DQP also notifies you of non-current disk drive firmware.

  NetApp Downloads: Disk Qualification Package

- The best practice is to have the current versions of disk shelf (IOM) firmware and disk drive firmware on your system before adding new disk shelves, shelf FRU components, or SAS cables.

  Current versions of firmware can be found on the NetApp Support Site.

  NetApp Downloads: Disk Shelf Firmware

  NetApp Downloads: Disk Drive Firmware

- Disk drive firmware is automatically updated (nondisruptively) on new disk drives with non current firmware versions.

  > Disk drive firmware checks occur every two minutes.

- If needed, you can turn on the disk shelf's location (blue) LEDs to aid in physically locating the affected disk shelf: `storage shelf location-led modify -shelf-name` *`shelf_name`* `-led-status on`

  A disk shelf has three location LEDs: one on the operator display panel and one on each shelf IOM. Location LEDs remain illuminated for 30 minutes. You can turn them off by entering the same command, but using the off option.

- If needed, you can refer to the Monitoring disk shelf LEDs section for information about the meaning and location of disk shelf LEDs on the operator display panel and FRU components.
- The DS460C drive shelf consist of five drive drawers (drive drawer 1 at the top through drive drawer 5 at the bottom) that each contain 12 drive slots.

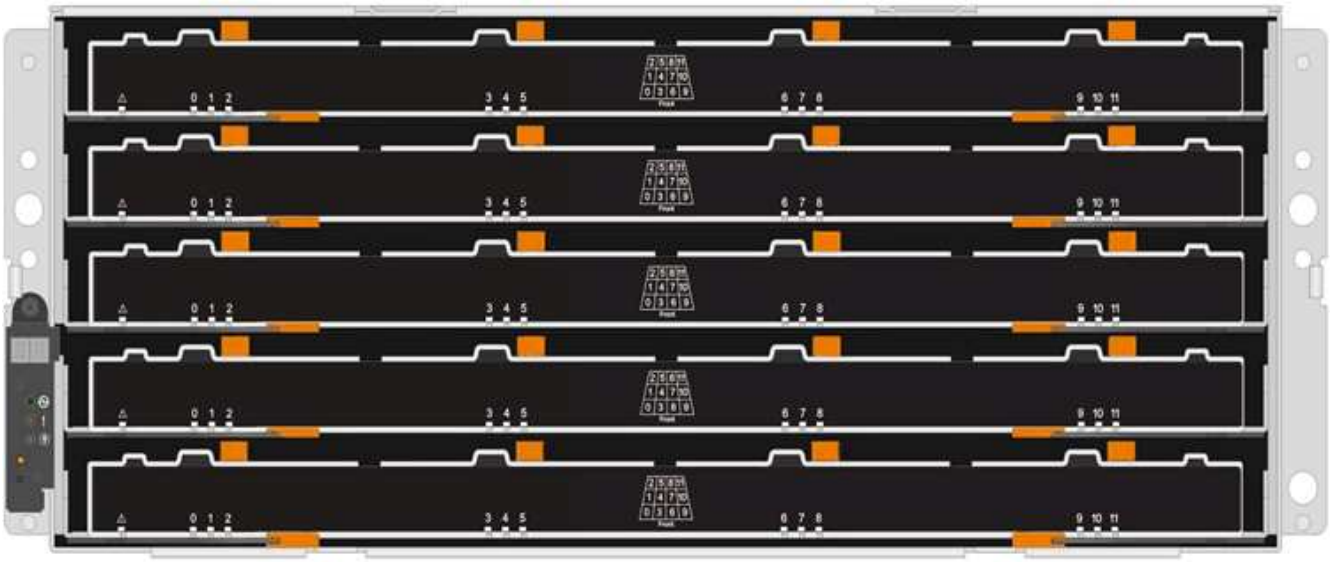

- The following illustration shows how the drives are numbered from 0 to 11 in each drive drawer within the shelf.

Steps

1. If you want to manually assign disk ownership for the replacement disk drive, you need to disable automatic drive assignment if it is enabled; otherwise, go to the next step.

   You need to manually assign disk ownership if disk drives in the stack are owned by both controllers in an HA pair.

   You manually assign disk ownership and then reenable automatic drive assignment later in this procedure.

   a. Verify if automatic drive assignment is enabled:`storage disk option show`

      If you have an HA pair, you can enter the command at the console of either controller.

If automatic drive assignment is enabled, the output shows “on” (for each controller) in the “Auto Assign” column.

b. If automatic drive assignment is enabled, you need to disable it:`storage disk option modify -node node_name -autoassign off`

   You need to disable automatic drive assignment on both controllers in an HA pair.

2. Properly ground yourself.
3. Unpack the new disk drive, and set it on a level surface near the disk shelf.

   Save all packaging materials for use when returning the failed disk drive.

   NetApp requires that all returned disk drives be in a ESD-rated bag.

4. Identify the failed disk drive from the system console warning message and the illuminated amber attention LED on the drive drawer.

   The 2.5-inch and 3.5-inch SAS drive carriers do not contain LEDs. Instead, you must look at the Attention LEDs on the drive drawers to determine which drive has failed.

   The drive drawer’s Attention LED (amber) blinks so you can open the correct drive drawer to identify which drive to replace.

   The drive drawer’s Attention LED is on the front-left side in front of each drive, with a warning symbol on the drive handle just behind the LED.

5. Open the drawer containing the failed drive:
   a. Unlatch the drive drawer by pulling on both levers.
   b. Using the extended levers, carefully pull the drive drawer out until it stops.
   c. Look at the top of the drive drawer to find the Attention LED that resides on the drawer in front of each drive.
6. Remove the failed drive from the open drawer:
   a. Gently pull back the orange release latch that is in front of the drive you want to remove.

1	Orange release latch

b. Open the cam handle, and lift out the drive slightly.
c. Wait 30 seconds.
d. Use the cam handle to lift the drive from the shelf.

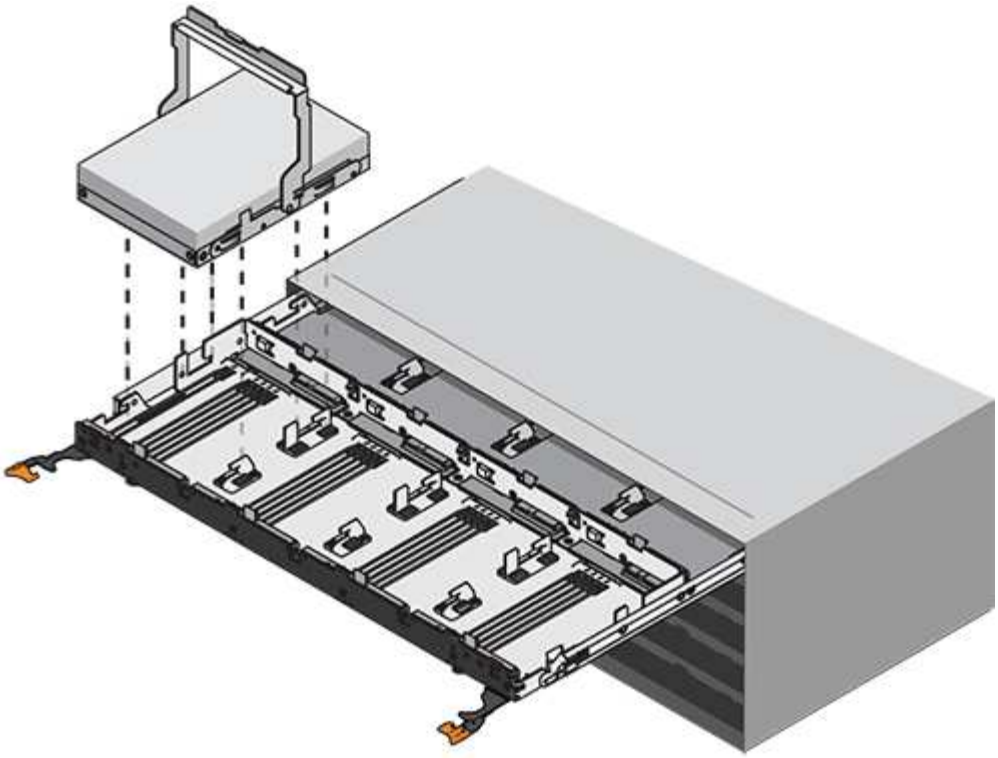

e. Place the drive on an antistatic, cushioned surface away from magnetic fields.

7. Insert the replacement drive in the drawer:
   a. Raise the cam handle on the new drive to vertical.
   b. Align the two raised buttons on each side of the drive carrier with the matching gap in the drive channel on the drive drawer.

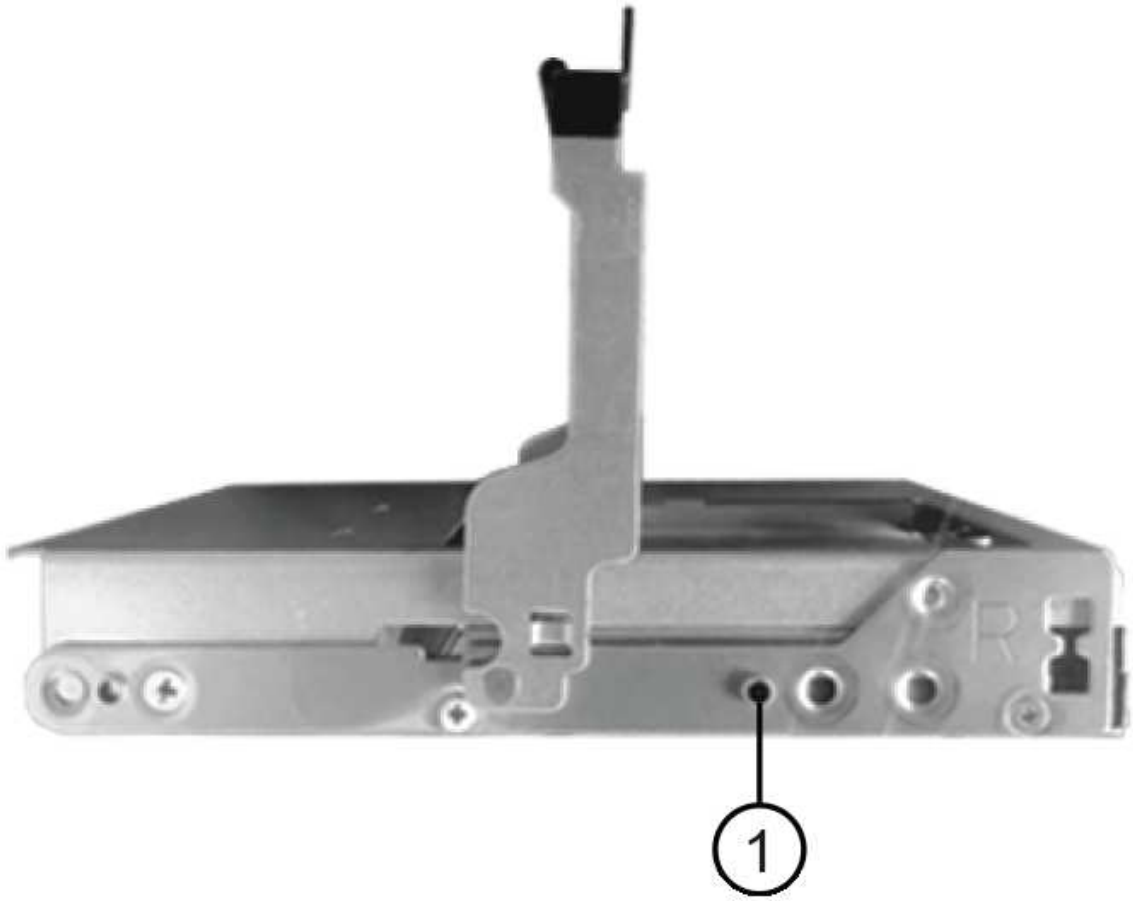

❶	Raised button on the right side of the drive carrier

c. Lower the drive straight down, and then rotate the cam handle down until the drive snaps into place under the orange release latch.

d. Carefully push the drive drawer back into the enclosure.

Possible loss of data access: Never slam the drawer shut. Push the drawer in slowly to avoid jarring the drawer and causing damage to the storage array.

e. Close the drive drawer by pushing both levers towards the center.

   The green Activity LED for the replaced drive on the front of the drive drawer comes on when the drive is inserted correctly.

8. If you are replacing another disk drive, repeat Steps 4 through 7.
9. Check the Activity LED and the Attention LED on the drive you replaced.

LED status	Description
The Activity LED is on or blinking, and the Attention LED is off	The new drive is working correctly.
The Activity LED is off	The drive might not be installed correctly. Remove the drive, wait 30 seconds, and then reinstall it.
The Attention LED is on	The new drive might be defective. Replace it with another new drive. When you first insert a drive, its Attention LED might be on. However, the LED should go off within a minute.

10. If you disabled disk ownership automatic assignment in Step 1, manually assign disk ownership, and then reenable disk ownership automatic assignment if needed:

    a. Display all unowned disks:`storage disk show -container-type unassigned`

    b. Assign each disk:`storage disk assign -disk` *`disk_name`* `-owner` *`owner_name`*

       You can use the wildcard character to assign more than one disk at once.

    c. Reenable disk ownership automatic assignment if needed:`storage disk option modify -node` *`node_name`* `-autoassign on`

       You need to reenable disk ownership automatic assignment on both controllers in an HA pair.

11. Return the failed part to NetApp, as described in the RMA instructions shipped with the kit.

    Contact technical support at NetApp Support, 888-463-8277 (North America), 00-800-44-638277 (Europe), or +800-800-80-800 (Asia/Pacific) if you need the RMA number or additional help with the replacement procedure.

Replace a drive drawer in a DS460C disk shelf - shelves with IOM12/IOM12B modules

Replacing a drive drawer in a shelf requires you to either halt the entire storage system (HA pair), which allows you to keep data aggregates on the shelf, or you have the option to keep the HA pair up and running, which requires you to move all of the data from the data aggregates residing on the disk drives, and offline and delete the data aggregates. However, if the shelf contains a root aggregate, you must halt the HA pair.

Before you begin

You need these items for this procedure:

- Antistatic protection

> **Possible hardware damage:** To prevent electrostatic discharge damage to the drive shelf, use proper antistatic protection when handling drive shelf components.

- Replacement drive drawer
- Replacement left and right cable chains
- Flashlight

About this task

- This procedure applies to shelves having DCM drive drawers and/or DCM2 drive drawers. (Shelves will also have two IOM12 modules or two IOM12B modules.)

  When a DCM or DCM2 drive drawer fails, you receive a DCM or DCM2 drive drawer to replace it.

> If when you replace a failed drive drawer, it results in the shelf having a combination of IOM12 modules and any number of DCM2 drive drawers, you must upgrade the IOM12 FW to version 0300 or later because the IOM12 modules require a version of FW that supports DCM2 drive drawers.
>
> The IOM12 FW upgrade can be done before or after replacing a drive drawer. This procedure has you upgrade the FW as part of the preparation for the drawer replacement procedure.

- The DCM drive drawers and the DCM2 drive drawers can be distinguished by their appearance:

  The DCM drive drawers look like the following:

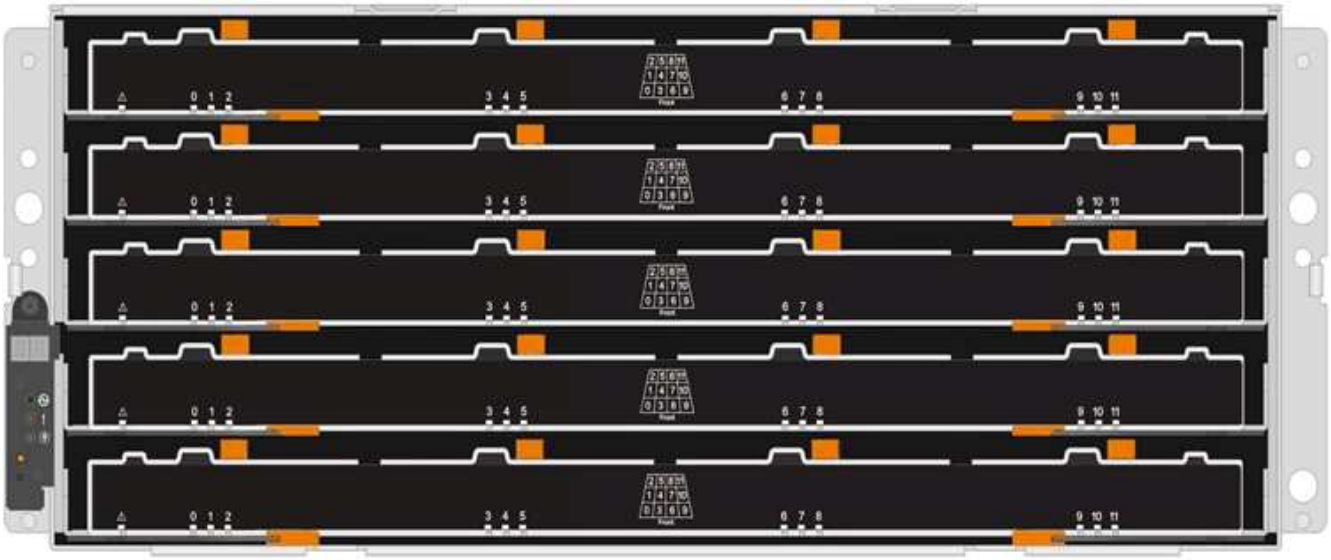

  The DCM2 drive drawers are distinguished by a blue stripe and "DCM2" label:

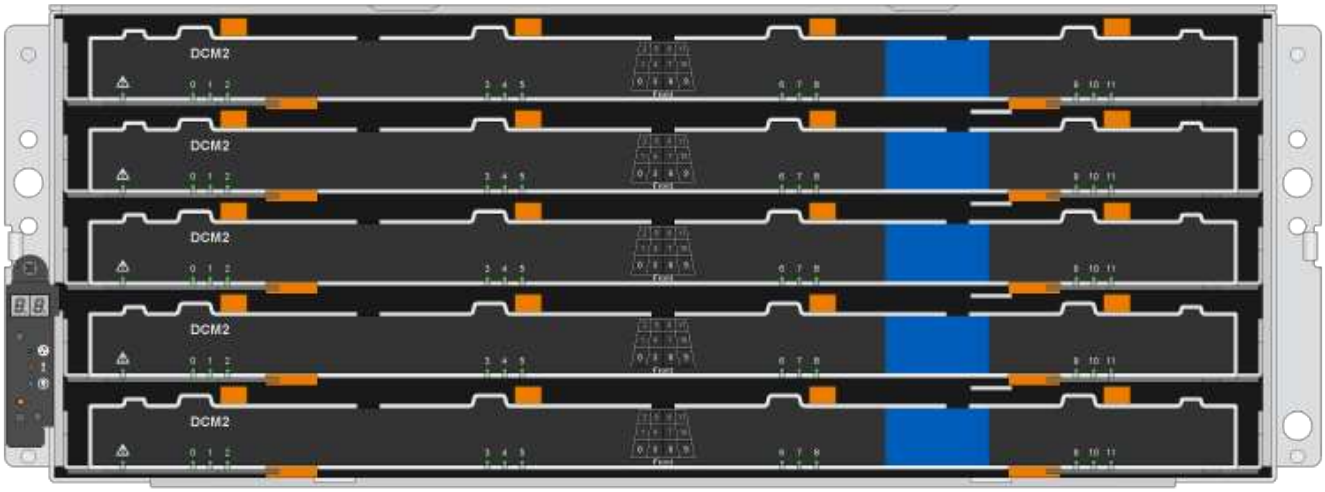

Prepare to replace a drive drawer

Before you replace a drive drawer, you must make sure to update IOM12 FW if needed, and either halt the HA pair, which allows you to keep data aggregates on the shelf, or you have the option to keep the HA pair up and running, which requires you to move all of the data from the data aggregates residing on the disk drives, and offline and delete the data aggregates. However, if the shelf contains a root aggregate, you must halt the HA pair. Lastly, you must power off the shelf.

steps

1. Determine if when you replace the failed drive drawer, it results in the shelf having a combination of IOM12 modules and any number of DCM2 drive drawers.
2. If the shelf will have a combination of IOM12 modules and any number of DCM2 drive drawers, you must upgrade the IOM12 FW to version 0300 or later; otherwise, go to the next step.

   Current versions of firmware can be found on the NetApp Support Site.

   NetApp Downloads: Disk Shelf Firmware

3. If the shelf contains the root aggregate from either controller in the HA pair, or if you chose to halt the HA pair (instead of keeping the HA pair up and running), complete the following substeps; otherwise, go to the next step.

   ⓘ Data aggregates can remain on the shelf when halting the HA pair.

   a. Halt both controllers in the HA pair.
   b. Verify that your HA pair halted by checking the storage system console.
   c. Power off the shelf.
   d. Go to the section, Remove the cable chains.

4. If you chose to keep the HA pair up and running, complete the following substeps:

   ⓘ If you attempt to replace a drawer with aggregates on the disk shelf, you could cause a system disruption with a multidisk panic.

a. Move all of the data from the data aggregates residing on the disk drives.

   Data includes, but is not limited to, volumes and LUNs.

b. Offine and delete the aggregates to allow the disk drives to become spares:

   Commands can be entered from the clustershell of either controller.

   `storage aggregate offline -aggregate aggregate_name`

   `storage aggregate delete -aggregate aggregate_name`

c. Verify that the disk drives have no aggregates (are spares):

   i. Enter the following command from the clustershell of either controller: `storage disk show -shelf shelf_number`

   ii. Check the output to verify that the drisk drives are spares.

   Disk drives that are spares show `spare` in the `Container Type` column.

   > If you have failed disk drives in the shelf, `broken` appears in the `Container Type` column.

d. Power off the shelf.

Remove the cable chains

Left and right cable chains for each drive drawer in the DS460C drive shelf allow the drawers to slide in and out. Before you can remove a drive drawer, you must remove both cable chains.

Before you begin

- You have completed the Prepare to replace a drive drawer steps so that your HA pair is halted or you have moved all of the data from the data aggregates residing on the disk drives, and offlined and deleted the data aggregates to allow the disk drives to become spares.
- You have powered off the shelf.
- You have obtained the following items:
  - Antistatic protection

    > **Possible hardware damage:** To prevent electrostatic discharge damage to the shelf, use proper antistatic protection when handling shelf components.

  - Flashlight

About this task

Each drive drawer has left and right cable chains. The metal ends on the cable chains slide into corresponding vertical and horizontal brackets inside the enclosure, as follows:

- The left and right vertical brackets connect the cable chain to the enclosure's midplane.
- The left and right horizontal brackets connect the cable chain to the individual drawer.

Steps

1. Put on antistatic protection.
2. From the rear of the drive shelf, remove the right fan module, as follows:
   a. Press the orange tab to release the fan module handle.

      The figure shows the handle for the fan module extended and released from the orange tab on the left.

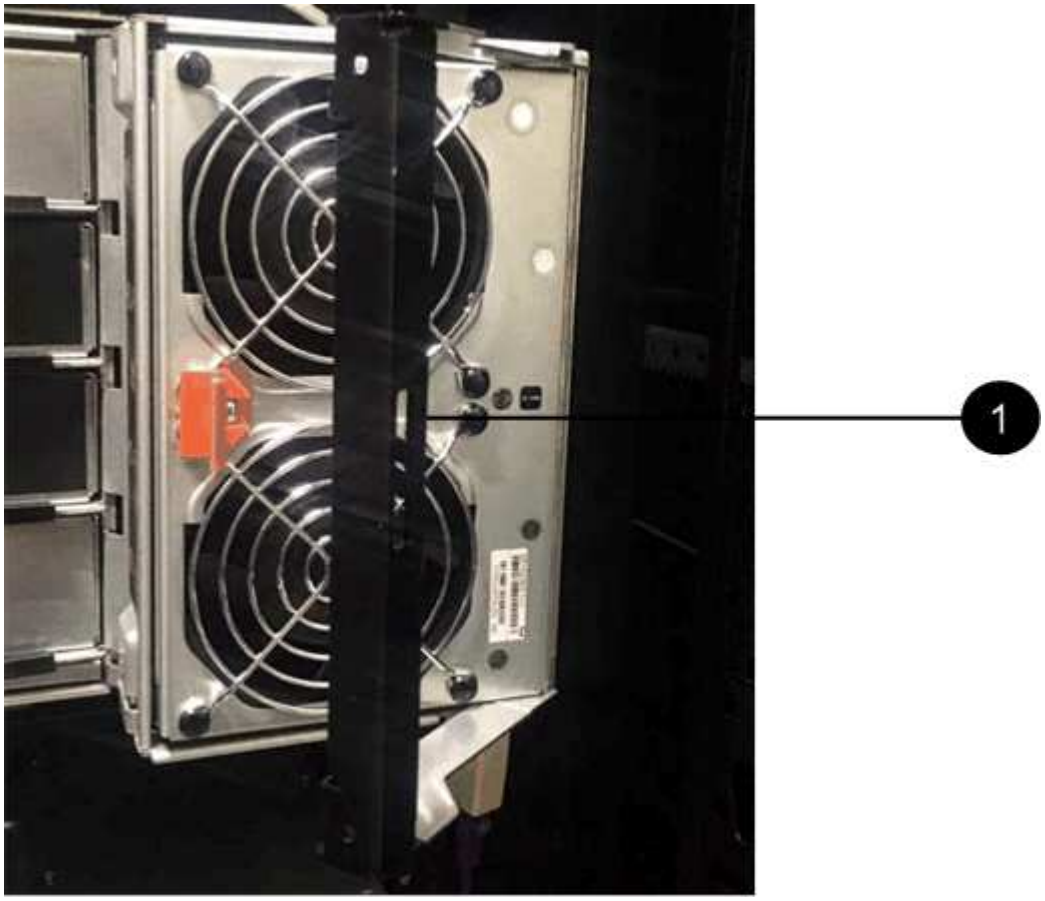

1	Fan module handle

   b. Using the handle, pull the fan module out of the drive shelf, and set it aside.
3. Manually determine which of the five cable chains to disconnect.

   The figure shows the right side of the drive shelf with the fan module removed. With the fan module removed, you can see the five cable chains and the vertical and horizontal connectors for each drawer. The callouts for drive drawer 1 are provided.

2
1
3

1	Cable chain
2	Vertical connector (connected to the midplane)
3	Horizontal connector (connected to the drive drawer)

The top cable chain is attached to drive drawer 1. The bottom cable chain is attached to drive drawer 5.

4. Use your finger to move the cable chain on the right side to the left.
5. Follow these steps to disconnect any of the right cable chains from its corresponding vertical bracket.
   a. Using a flashlight, locate the orange ring on the end of the cable chain that is connected to the vertical bracket in the enclosure.

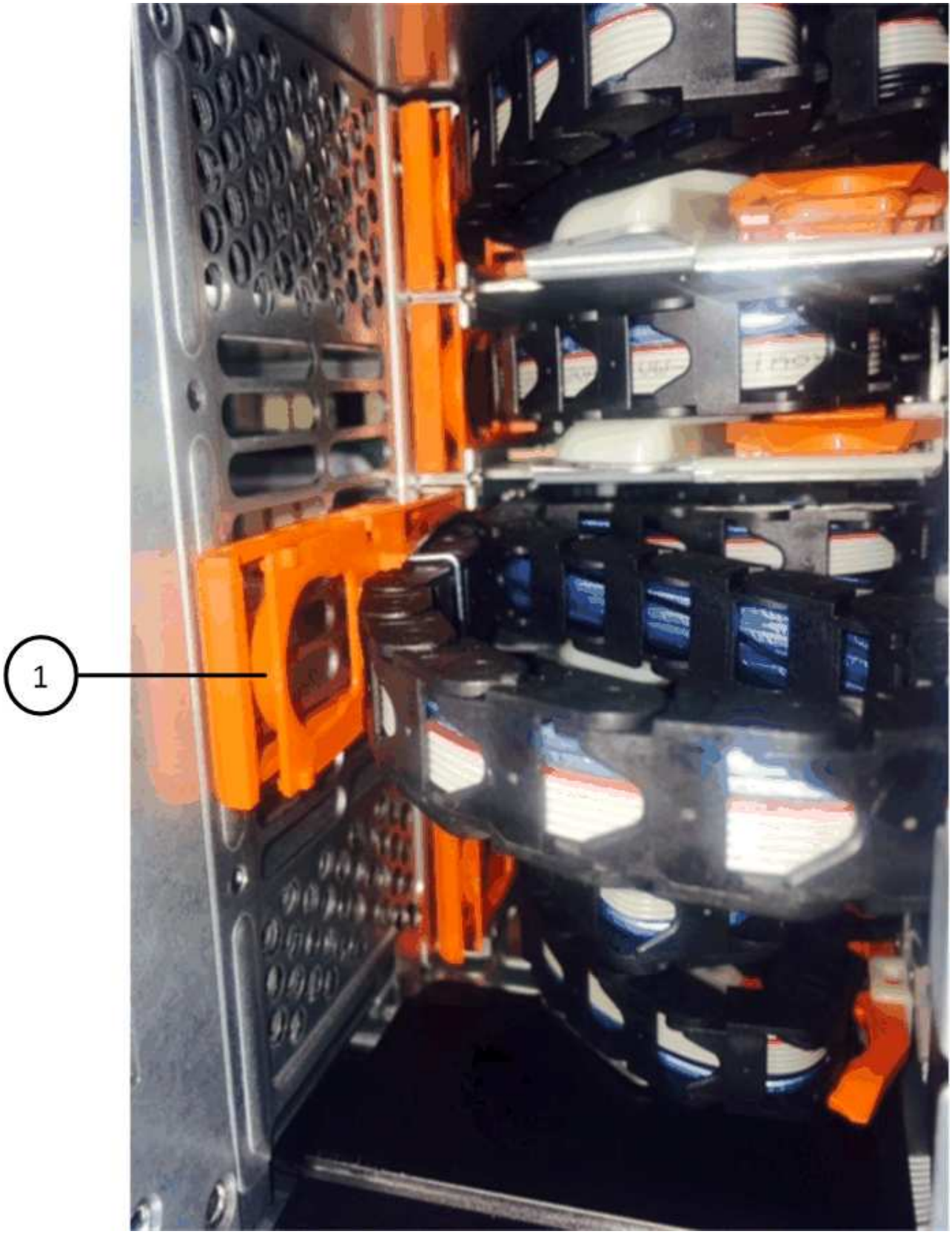

1	Orange ring on the vertical bracket

b. Disconnect the vertical connector (connected to the midplane) by gently pressing on the center of the

orange ring and pulling the left side of the cable out of the enclosure.

c. To unplug the cable chain, carefully pull your finger toward you approximately 1 inch (2.5 cm), but leave the cable chain connector within the vertical bracket.

6. Follow these steps to disconnect the other end of the cable chain:

   a. Using a flashlight, locate the orange ring on the end of the cable chain that is attached to the horizontal bracket in the enclosure.

      The figure shows the horizontal connector on the right and the cable chain disconnected and partially pulled out on the left side.

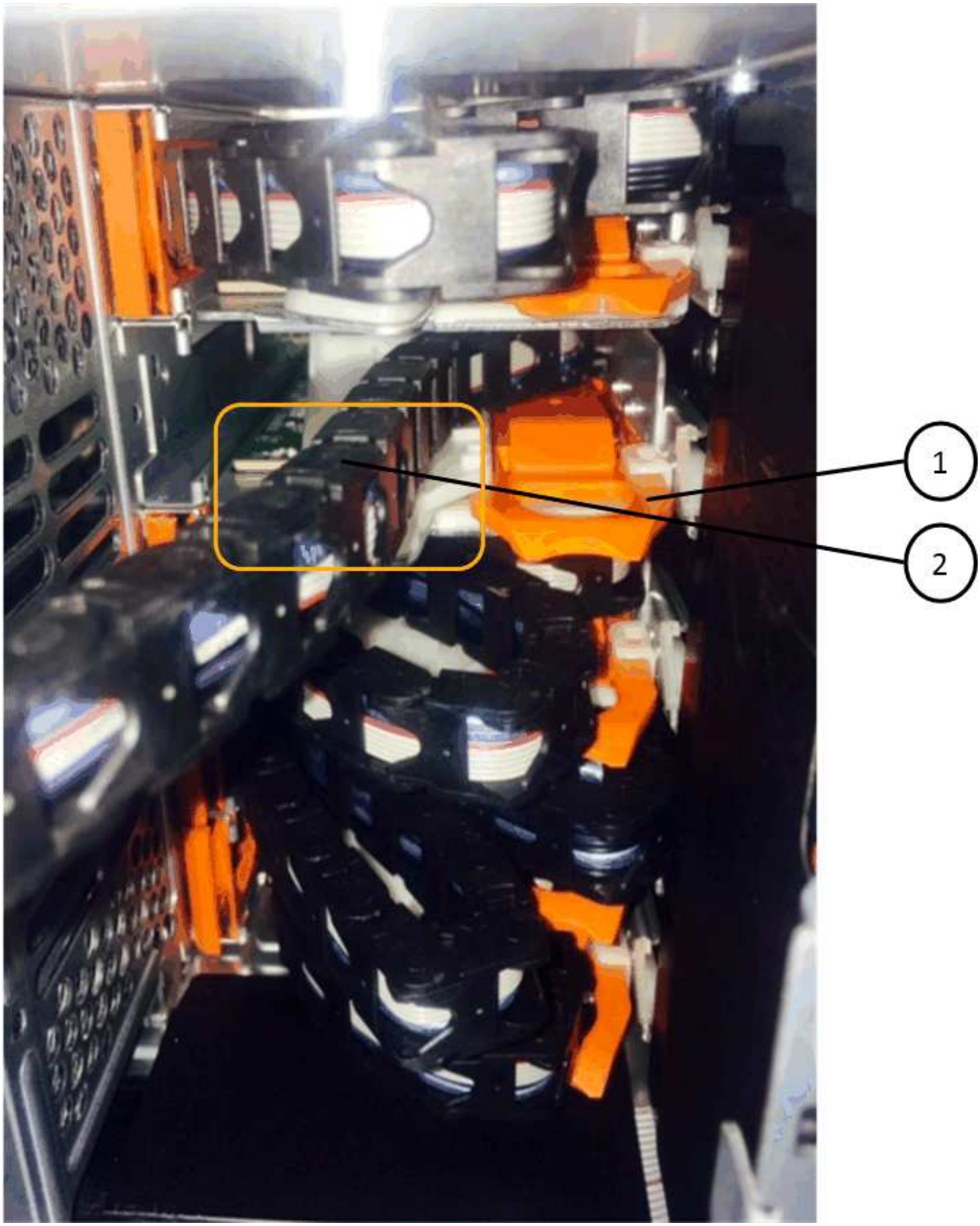

❶	Orange ring on horizontal bracket
❷	Cable chain

b. Gently insert your finger into the orange ring.

   The figure shows the orange ring on the horizontal bracket being pushed down so that the rest of the cable chain can be pulled out of the enclosure.

c. Pull your finger toward you to unplug the cable chain.

7. Carefully pull the entire cable chain out of the drive shelf.
8. From the back of the drive shelf, remove the left fan module.
9. Follow these steps to disconnect the left cable chain from its vertical bracket:
   a. Using a flashlight, locate the orange ring on the end of the cable chain attached to the vertical bracket.
   b. Insert your finger into the orange ring.
   c. To unplug the cable chain, pull your finger toward you approximately 1 inch (2.5 cm), but leave the cable chain connector within the vertical bracket.
10. Disconnect the left cable chain from the horizontal bracket, and pull the entire cable chain out of the drive shelf.

Remove a drive drawer

After removing the right and left cable chains, you can remove the drive drawer from the drive shelf. Removing a drive drawer entails sliding the drawer part of the way out, removing the drives, and removing the drive drawer.

Before you begin

- You have removed the right and left cable chains for the drive drawer.
- You have replaced the right and left fan modules.

Steps

1. Remove the bezel from the front of the drive shelf.
2. Unlatch the drive drawer by pulling out on both levers.
3. Using the extended levers, carefully pull the drive drawer out until it stops. Do not completely remove the drive drawer from the drive shelf.
4. Remove the drives from the drive drawer:
   a. Gently pull back the orange release latch that is visible on the center front of each drive. The following image shows the orange release latch for each of the drives.

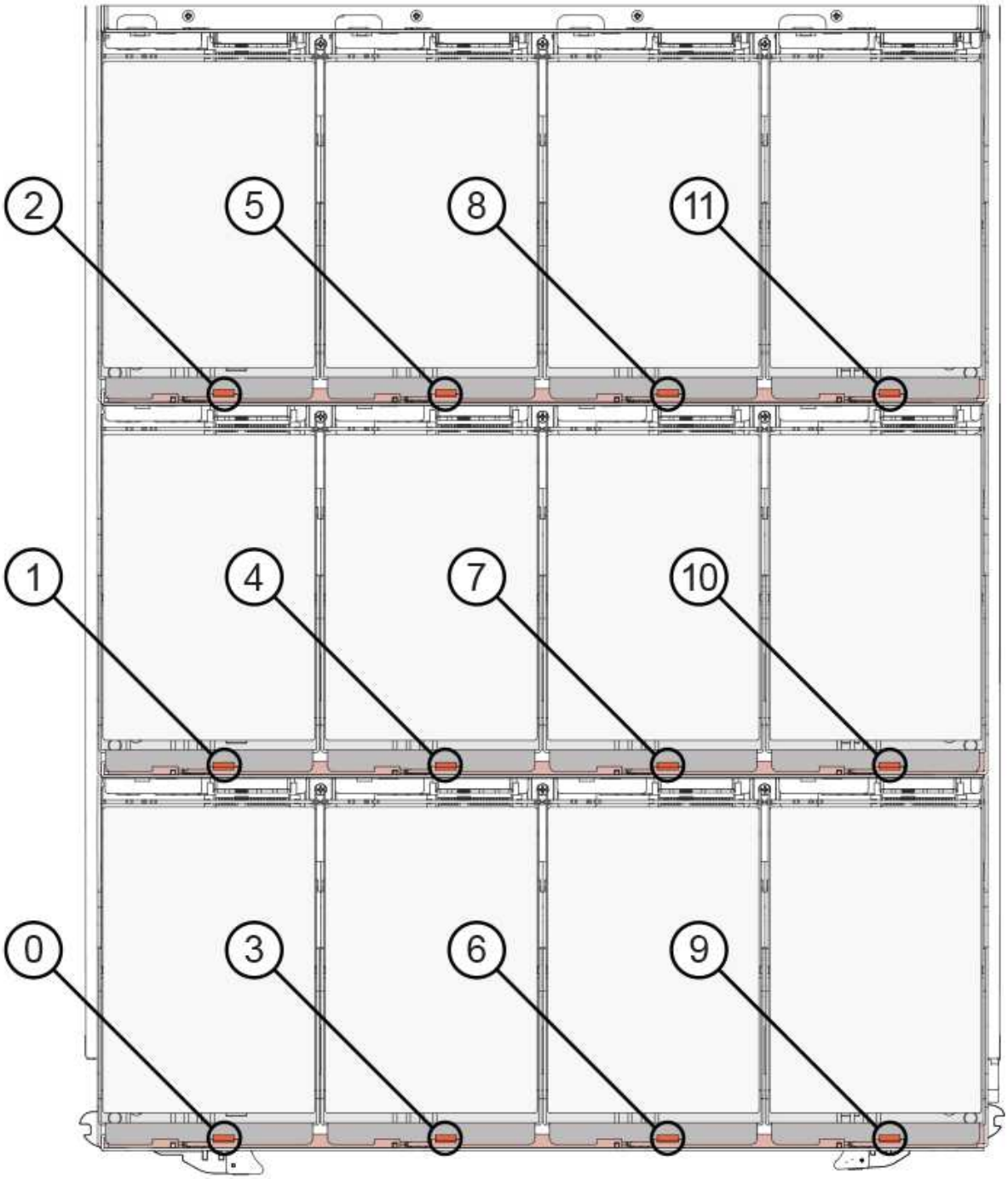

b. Raise the drive handle to vertical.

c. Use the handle to lift the drive from the drive drawer.

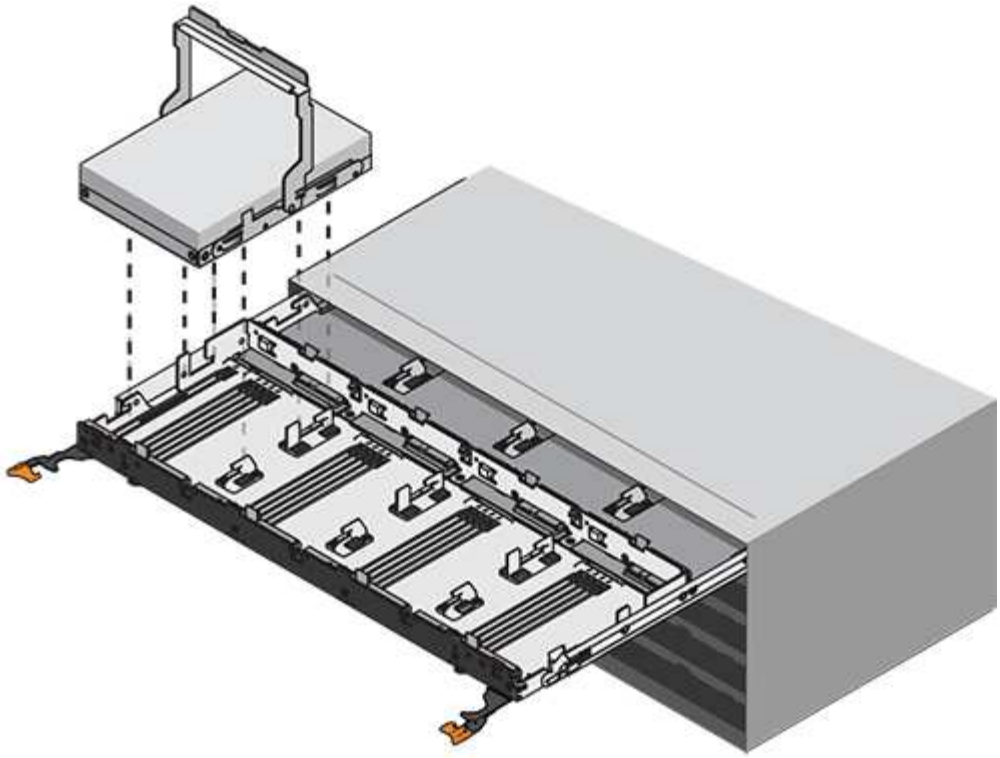

d. Place the drive on a flat, static-free surface and away from magnetic devices.

> **Possible loss of data access:** Magnetic fields can destroy all data on the drive and cause irreparable damage to the drive circuitry. To avoid loss of data access and damage to the drives, always keep drives away from magnetic devices.

5. Follow these steps to remove the drive drawer:

   a. Locate the plastic release lever on each side of the drive drawer.

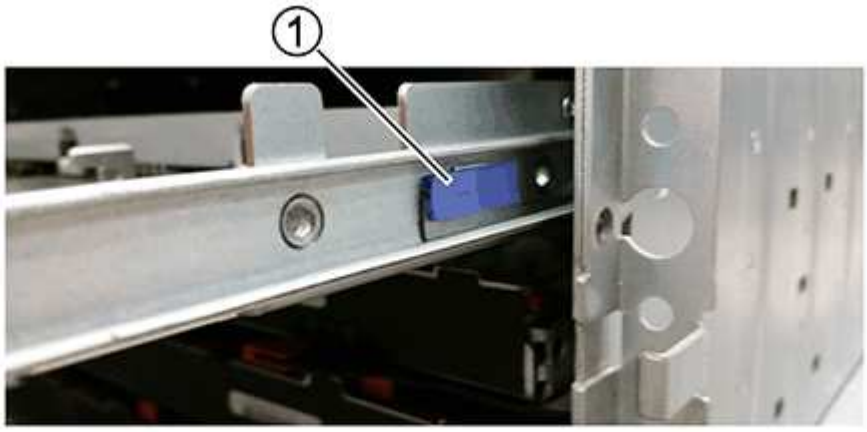

1	Drive drawer release lever

   b. Open both release levers by pulling the latches toward you.

c. While holding both release levers, pull the drive drawer toward you.

d. Remove the drive drawer from the drive shelf.

Install a drive drawer

Installing a drive drawer into a drive shelf entails sliding the drawer into the empty slot, installing the drives, and replacing the front bezel.

Before you begin

- You have obtained the following items:
  - Replacement drive drawer
  - Flashlight

Steps

1. From the front of the drive shelf, shine a flashlight into the empty drawer slot, and locate the lock-out tumbler for that slot.

   The lock-out tumbler assembly is a safety feature that prevents you from being able to open more than one drive drawer at one time.

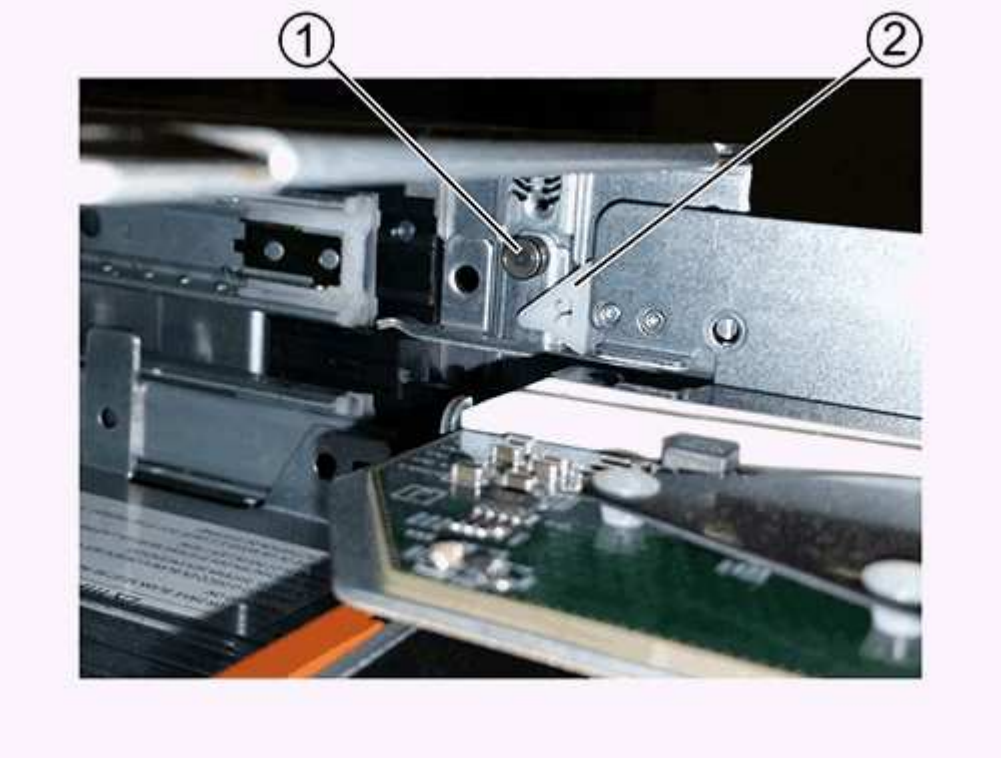

1	Lock-out tumbler
2	Drawer guide

2. Position the replacement drive drawer in front of the empty slot and slightly to the right of center.

   Positioning the drawer slightly to the right of center helps to ensure that the lock-out tumbler and the

drawer guide are correctly engaged.

3. Slide the drive drawer into the slot, and ensure that the drawer guide slides under the lock-out tumbler.

> **Risk of equipment damage:** Damage occurs if the drawer guide does not slide under the lock-out tumbler.

4. Carefully push the drive drawer all the way in until the latch fully engages.

> **Risk of equipment damage:** Stop pushing the drive drawer if you feel excessive resistance or binding. Use the release levers at the front of the drawer to slide the drawer back out. Then, reinsert the drawer into the slot, and ensure that it slides in and out freely.

5. Follow these steps to reinstall the drives in the drive drawer:
   a. Unlatch the drive drawer by pulling out on both levers at the front of the drawer.
   b. Using the extended levers, carefully pull the drive drawer out until it stops. Do not completely remove the drive drawer from the drive shelf.
   c. On the drive you are installing, raise the handle to vertical.
   d. Align the two raised buttons on each side of the drive with the notches on the drawer.

      The figure shows the right side view of a drive, showing the location of the raised buttons.

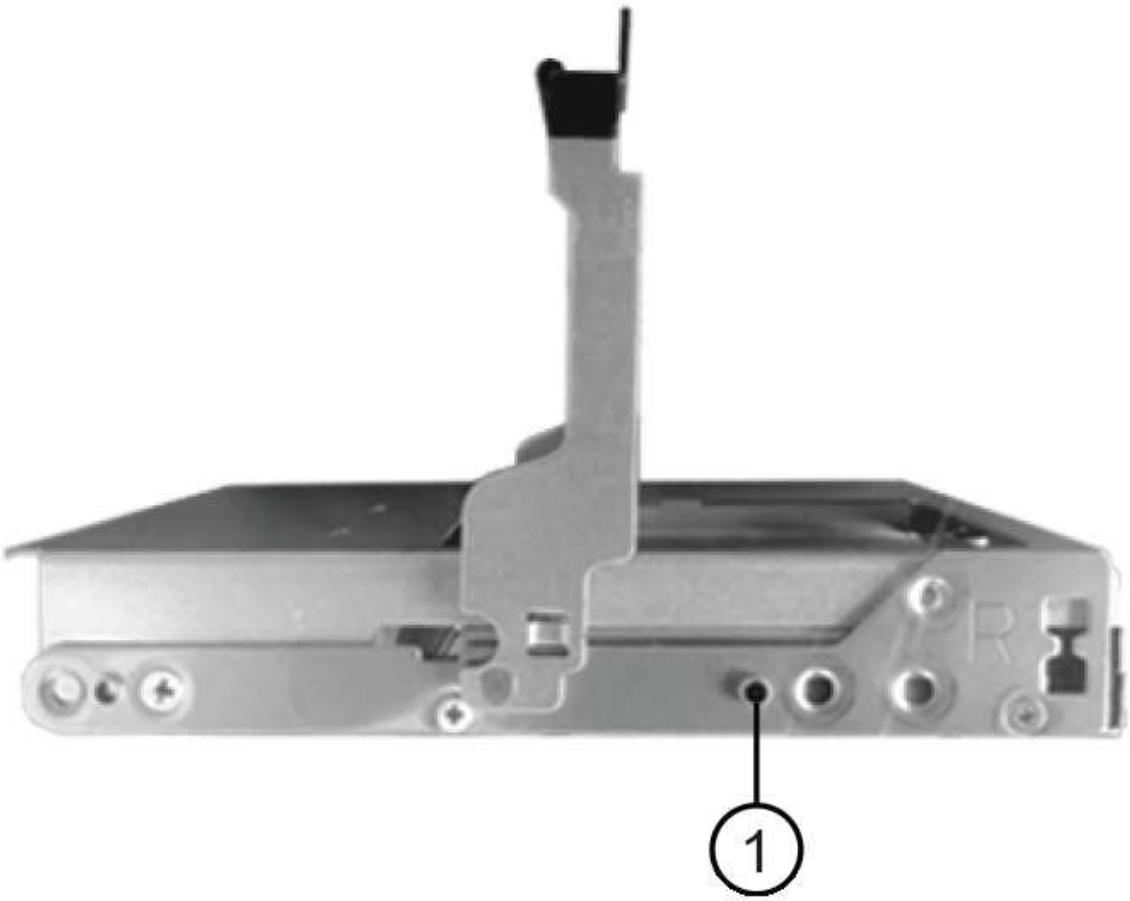

❶	Raised button on the right side of the drive.

e. Lower the drive straight down, and then rotate the drive handle down until the drive snaps into place.

   If you have a partially populated shelf, meaning that the drawer in which you are reinstalling drives has less than the 12 drives it supports, install the first four drives into the front slots (0, 3, 6, and 9).

   Risk of equipment malfunction: To allow for proper air flow and prevent overheating, always install the first four drives into the front slots (0, 3, 6, and 9).

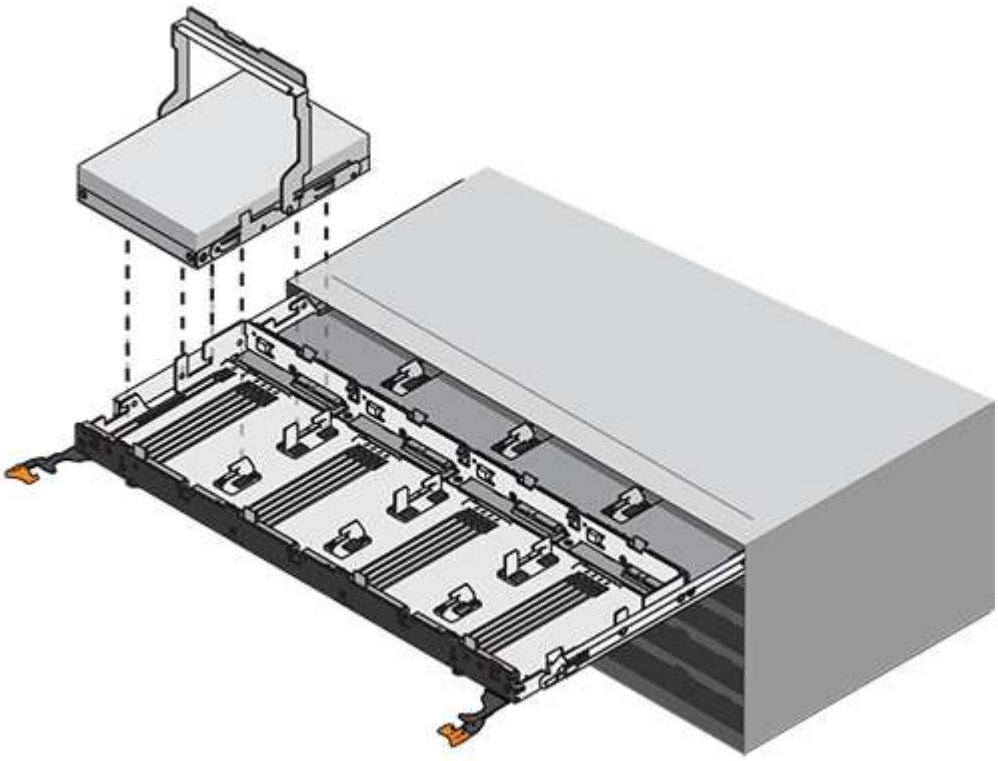

f. Repeat these substeps to reinstall all of the drives.

6. Slide the drawer back into the drive shelf by pushing it from the center and closing both levers.

   Risk of equipment malfunction: Make sure to completely close the drive drawer by pushing both levers. You must completely close the drive drawer to allow proper airflow and prevent overheating.

7. Attach the bezel to the front of the drive shelf.

Attach the cable chains

The final step in installing a drive drawer is attaching the replacement left and right cable chains to the drive shelf. When attaching a cable chain, reverse the order you used when disconnecting the cable chain. You must insert the chain's horizontal connector into the horizontal bracket in the enclosure before inserting the chain's vertical connector into the vertical bracket in the enclosure.

Before you begin

- You have replaced the drive drawer and all of the drives.
- You have two replacement cable chains, marked as LEFT and RIGHT (on the horizontal connector next to the drive drawer).

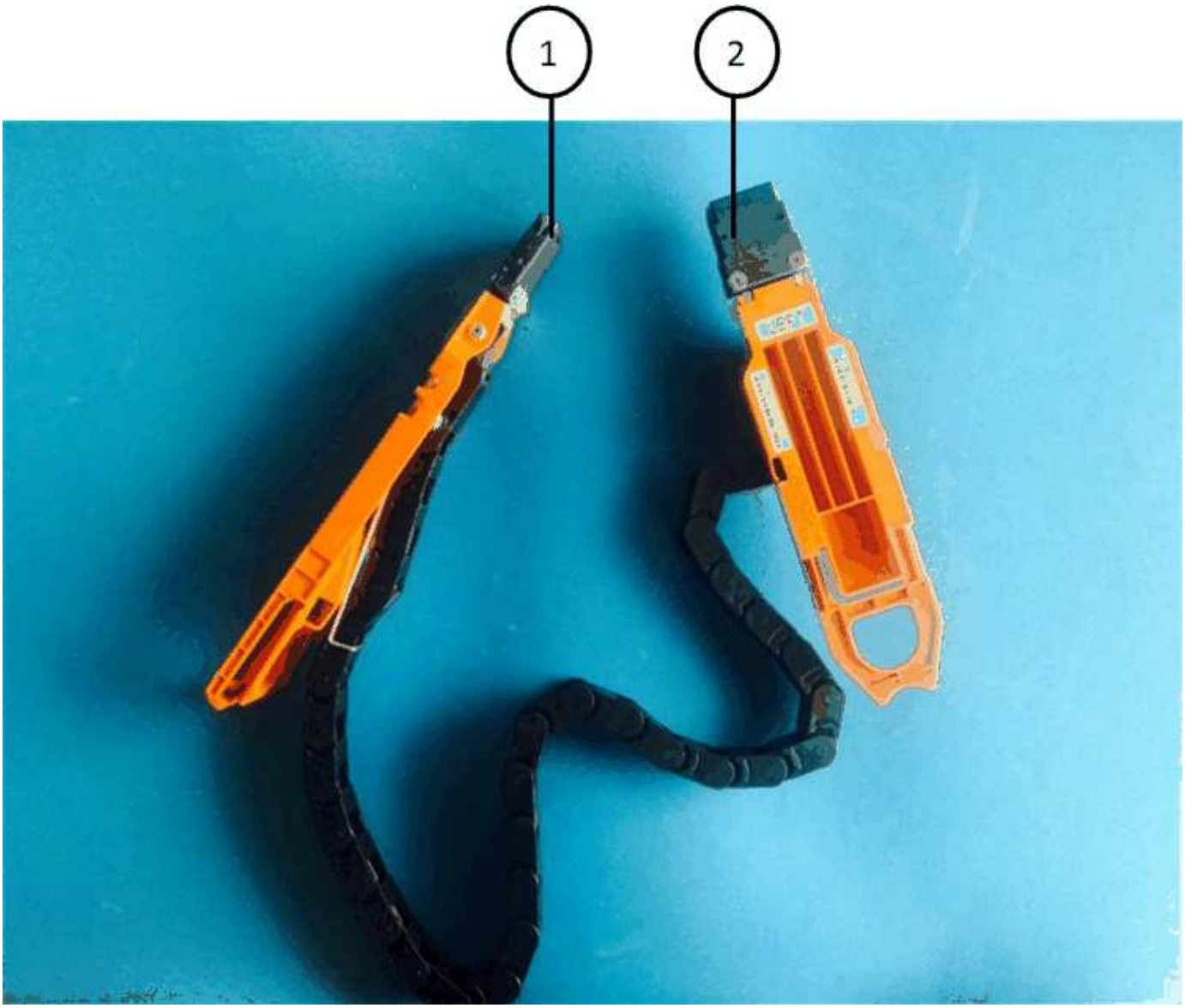

Callout	Cable chain	Connector	Connects to
1	Left	Vertical	Midplane
2	Left	Horizontal	Drive drawer

Callout	Cable chain	Connector	Connects to
❶	Right	Horizontal	Drive drawer
❷	Right	Vertical	Midplane

Steps

1. Follow these steps to attach the left cable chain:
   a. Locate the horizontal and vertical connectors on the left cable chain and the corresponding horizontal and vertical brackets inside the enclosure.
   b. Align both cable chain connectors with their corresponding brackets.
   c. Slide the cable chain's horizontal connector under the guide rail on the horizontal bracket, and push it in as far as it can go.

      The figure shows the guide rail on the left side for the second drive drawer in the enclosure.

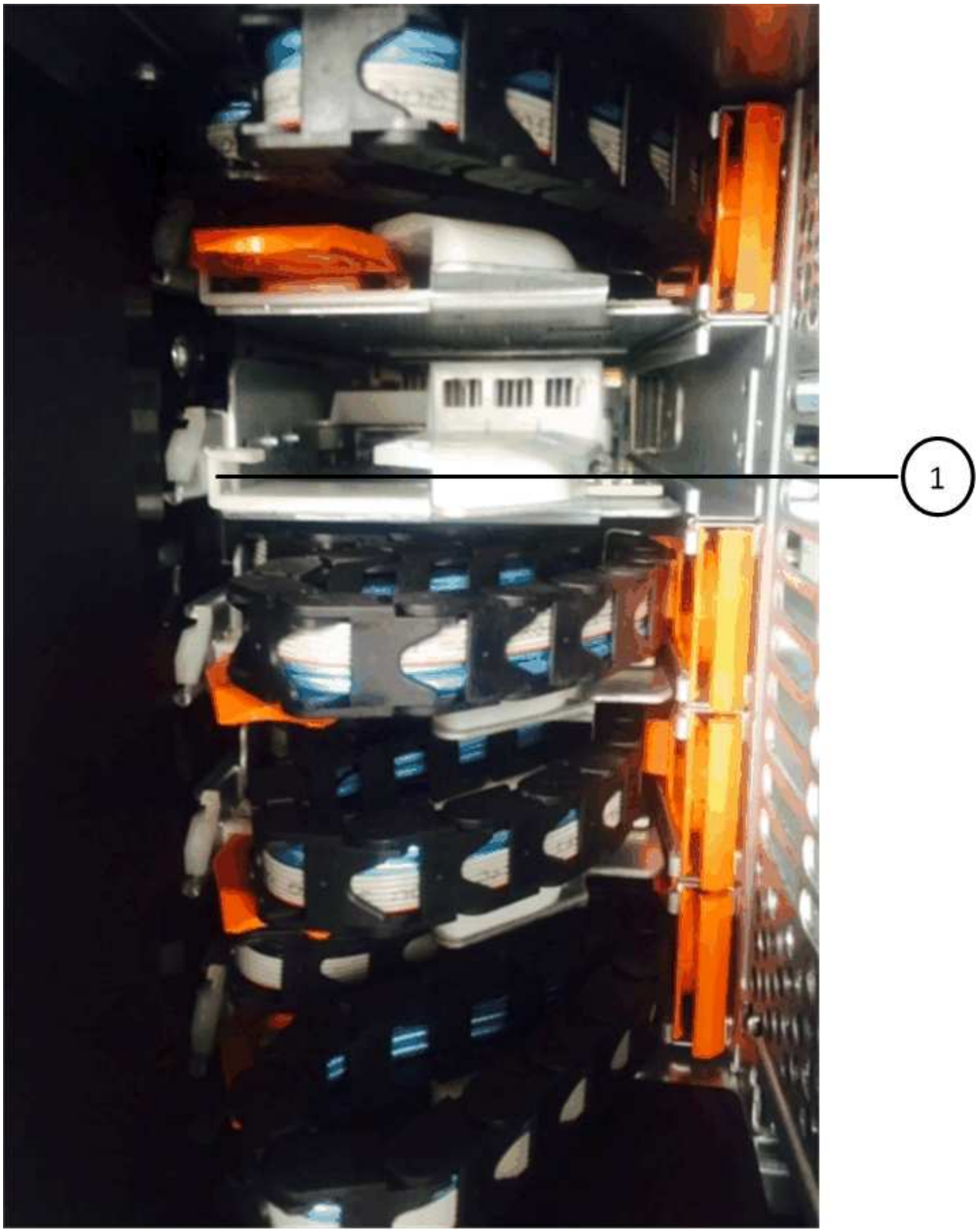

1	Guide rail

> **Risk of equipment malfunction:** Make sure to slide the connector underneath the guide rail on the bracket. If the connector rests on the top of the guide rail, problems might occur when the system runs.

   d. Slide the vertical connector on the left cable chain into the vertical bracket.
   e. After you have reconnected both ends of the cable chain, carefully pull on the cable chain to verify that both connectors are latched.

> **Risk of equipment malfunction:** If the connectors are not latched, the cable chain might come loose during drawer operation.

2. Reinstall the left fan module.
3. Follow these steps to reattach the right cable chain:
   a. Locate the horizontal and vertical connectors on the cable chain and their corresponding horizontal and vertical brackets inside the enclosure.
   b. Align both cable chain connectors with their corresponding brackets.
   c. Slide the cable chain's horizontal connector under the guide rail on the horizontal bracket and push it in as far as it will go.

> **Risk of equipment malfunction:** Make sure to slide the connector underneath the guide rail on the bracket. If the connector rests on the top of the guide rail, problems might occur when the system runs.

   d. Slide the vertical connector on the right cable chain into the vertical bracket.
   e. After you reconnect both ends of the cable chain, carefully pull on the cable chain to verify that both connectors are latched.

> **Risk of equipment malfunction:** If the connectors are not latched, the cable chain might come loose during drawer operation.

4. Reinstall the right fan module.
5. Reapply power:
   a. Turn on both power switches on the drive shelf.
   b. Confirm that both fans come on and that the amber LED on the back of the fans is off.
6. If you had halted the HA pair, boot ONTAP on both controllers; otherwise go to the next step.
7. If you had moved data off the shelf and deleted the data aggregates, you can now use the spare disks in the shelf for aggregate creation or expansion.

   Aggregate creation workflow

   Aggregate expansion workflow

Drive shelf

Overview - SAS3 shelves

The NetApp SAS3 drive shelf uses SAS connectors to connect to the storage system.

Take the following actions to maintain your SAS3 drive shelf.

- Cold-replace a shelf
- Hot-remove a shelf
- Monitor shelf LEDs

Cold-replace a shelf - shelves with IOM12/IOM12B modules

When replacing a drive shelf in a production system that has disks in use, you need to perform a cold shelf replacement. This is a disruptive procedure. It requires you to halt the controllers in your HA pair.

Use the KB article How to replace a shelf chassis using a cold shelf removal procedure.

Hot-remove a shelf - shelves with IOM12/IOM12B modules

You can hot-remove a disk shelf with IOM12/IOM12B modules (nondisruptively remove a disk shelf from a system that is powered on and I/O is in progress) when you need to move or replace a disk shelf. You can hot-remove one or more disk shelves from anywhere within a stack of disk shelves or remove a stack of disk shelves.

Before you begin

- Your system must be a multipath HA, tri-path HA, multipath, quad-path HA, or quad-path configuration.

  For platforms with internal storage, the external storage must be cabled as multipath HA, tri-path HA, or multipath.

  > For a FAS2600 series single-controller system that has the external storage cabled with multipath connectivity, the system is a mixed-path configuration because the internal storage uses single-path connectivity.

- Your system cannot have any SAS cabling error messages.

  You can download and run Active IQ Config Advisor to view any SAS cabling error messages and the corrective actions you should take.

  NetApp Downloads: Config Advisor

- HA pair configurations cannot be in a takeover state.
- You must have removed all aggregates from the disk drives (the disk drives must be spares) in the disk shelves you are removing.

  > If you attempt this procedure with aggregates on the disk shelf you are removing, you could fail the system with a multidisk panic.

  You can use the `storage aggregate offline -aggregate` *`aggregate_name`* command and then

the `storage aggregate delete -aggregate` *`aggregate_name`* command.

- If you are removing one or more disk shelves from within a stack, you must have factored the distance to bypass the disk shelves you are removing; therefore, if the current cables are not long enough, you need to have longer cables available.

About this task

- **Best practice:** The best practice is to remove disk drive ownership after you remove the aggregates from the disk drives in the disk shelves you are removing.

  Removing ownership information from a spare disk drive allows the disk drive to be properly integrated into another node (as needed).

> The procedure for removing ownership from disk drives requires you to disable disk ownership automatic assignment. You reenable disk ownership automatic assignment at the end of this procedure.
>
> Disks and aggregates overview

- For a clustered ONTAP system that is greater than two-nodes, best practice is to have reassigned epsilon to an HA pair other than the one that is undergoing planned maintenance.

  Reassigning epsilon minimizes the risk of unforeseen errors impacting all nodes in a clustered ONTAP system. You can use the following steps to determine the node holding epsilon and reassign epsilon if needed:

  1. Set privilege level to advanced: `set -privilege advanced`
  2. Determine which node holds epsilon: `cluster show`

     The node that holds epsilon shows `true` in the `Epsilon` column. (The nodes that do not hold epsilon show `false`.)

  3. If the node in the HA pair that is undergoing maintenance shows `true` (holds epsilon), then remove epsilon from the node: `cluster modify -node` *`node_name`* `-epsilon false`
  4. Assign epsilon to a node in another HA pair: `cluster modify -node` *`node_name`* `-epsilon true`
  5. Return to the admin privilege level: `set -privilege admin`

- If you are hot-removing a disk shelf from a stack (but keeping the stack), you recable and verify one path at a time (path A then path B) to bypass the disk shelf you are removing so that you always maintain single-path connectivity from the controllers to the stack.

> If you do not maintain single-path connectivity from the controllers to the stack when recabling the stack to bypass the disk shelf you are removing, you could fail the system with a multidisk panic.

- **Possible shelf damage:** If you are removing a DS460C shelf and you are moving it to a different part of the data center or transporting it to a different location, see the "Move or transport DS460C shelves" section at the end of this procedure.

Steps

1. Verify that your system configuration is `Multi-Path HA`, `tri-path HA`, `Multi-Path`, `Quad-path HA`, or `Quad-path` by running the the `sysconfig` command from the nodeshell of either controller.

   It might take up to a minute for the system to complete discovery.

   The configuration is listed in the `System Storage Configuration` field.

   > For a FAS2600 series single-controller system that has the external storage cabled with multipath connectivity, the output is displayed as `mixed-path` because the internal storage uses single-path connectivity.

2. Verify that the disk drives in the disk shelves you are removing have no aggregates (are spares) and ownership is removed:

   a. Enter the following command from the clustershell of either controller: `storage disk show -shelf` *`shelf_number`*

   b. Check the output to verify that there are no aggregates on the disk drives in the disk shelves you are removing.

      Disk drives with no aggregates have a dash in the `Container Name` column.

   c. Check the output to verify that ownership is removed from the disk drives on the disk shelves you are removing.

      Disk drives with no ownership have a dash in the `Owner` column.

      > If you have failed disk drives in the shelf you are removing, they have broken in the `Container Type` column. (Failed disk drive do not have ownership.)

      The following output shows disk drives on the disk shelf being removed (disk shelf 3) are in a correct state for removing the disk shelf. The aggregates are removed on all of the disk drives; therefore, a dash appears in the `Container Name` column for each disk drive. Ownership is also removed on all of the disk drives; therefore, a dash appears in the `Owner` column for each disk drive.

```
cluster::> storage disk show -shelf 3

           Usable           Disk   Container   Container
Disk         Size Shelf Bay Type   Type        Name       Owner
-------- -------- ----- --- ------ ----------- ---------- ---------
...
1.3.4           -     3   4 SAS    spare                -         -
1.3.5           -     3   5 SAS    spare                -         -
1.3.6           -     3   6 SAS    broken               -         -
1.3.7           -     3   7 SAS    spare                -         -
...
```

3. Physically locate the disk shelves you are removing.

   If needed, you can turn on the disk shelf's location (blue) LEDs to aid in physically locating the affected disk

shelf: `storage shelf location-led modify -shelf-name shelf_name -led-status on`

> A disk shelf has three location LEDs: one on the operator display panel and one on each IOM12 module. Location LEDs remain illuminated for 30 minutes. You can turn them off by entering the same command, but using the off option.

4. If you are removing an entire stack of disk shelves, complete the following substeps; otherwise, go to the next step:
   a. Remove all SAS cables on path A (IOM A) and path B (IOM B).

      This includes controller-to-shelf cables and shelf-to-shelf cables for all disk shelves in the stack you are removing.

   b. Go to step 9.
5. If you are removing one or more disk shelves from a stack (but keeping the stack), recable the path A (IOM A) stack connections to bypass the disk shelves you are removing by completing the applicable set of substeps:

   If you are removing more than one disk shelf in the stack, complete the applicable set of substeps one disk shelf at a time.

> Wait at least 10 seconds before connecting the port. The SAS cable connectors are keyed; when oriented correctly into a SAS port, the connector clicks into place and the disk shelf SAS port LNK LED illuminates green. For disk shelves, you insert a SAS cable connector with the pull tab oriented down (on the underside of the connector).

If you are removing…	Then…
A disk shelf from either end (logical first or last disk shelf) of a stack	a. Remove any shelf-to-shelf cabling from IOM A ports on the disk shelf you are removing and put them aside. b. Unplug any controller-to-stack cabling connected to IOM A ports on the disk shelf you are removing and plug them into the same IOM A ports on the next disk shelf in the stack. The “next” disk shelf can be above or below the disk shelf you are removing depending on which end of the stack you are removing the disk shelf from.

If you are removing…	Then…
A disk shelf from the middle of the stack A disk shelf in the middle of a stack is only connected to other disk shelves—not to any controllers.	a. Remove any shelf-to-shelf cabling from IOM A ports 1 and 2 or from ports 3 and 4 on the disk shelf you are removing and IOM A of the next disk shelf, and then put them aside. b. Unplug the remaining shelf-to-shelf cabling connected to IOM A ports on the disk shelf you are removing and plug them into the same IOM A ports on the next disk shelf in the stack. The “next” disk shelf can be above or below the disk shelf you are removing depending on which IOM A ports (1 and 2 or 3 and 4) you removed the cabling from.

You can refer to the following cabling examples when removing a disk shelf from an end of a stack or the middle of a stack. Note the following about the cabling examples:

- The IOM12/IOM12B modules are arranged side-by-side as in a DS224C or DS212C disk shelf; if you have a DS460C, the IOM12/IOM12B modules are arranged one above the other.
- The stack in each example is cabled with standard shelf-to-shelf cabling, which is used in stacks cabled with multipath HA, tri-path HA, or multipath connectivity.

  You can infer the recabling if your stack is cabled with quad-path HA or quad-path connectivity, which uses double-wide shelf-to-shelf cabling.

- The cabling examples demonstrate recabling one of the paths: path A (IOM A).

  You repeat the recabling for path B (IOM B).

- The cabling example for removing a disk shelf from the end of a stack demonstrates removing the logical last disk shelf in a stack that is cabled with multipath HA or tri-path HA connectivity.

  You can infer the recabling if you are removing the logical first disk shelf in a stack or if your stack has multipath connectivity.

Removing the logical last shelf in a stack: recabling path A (IOM A)

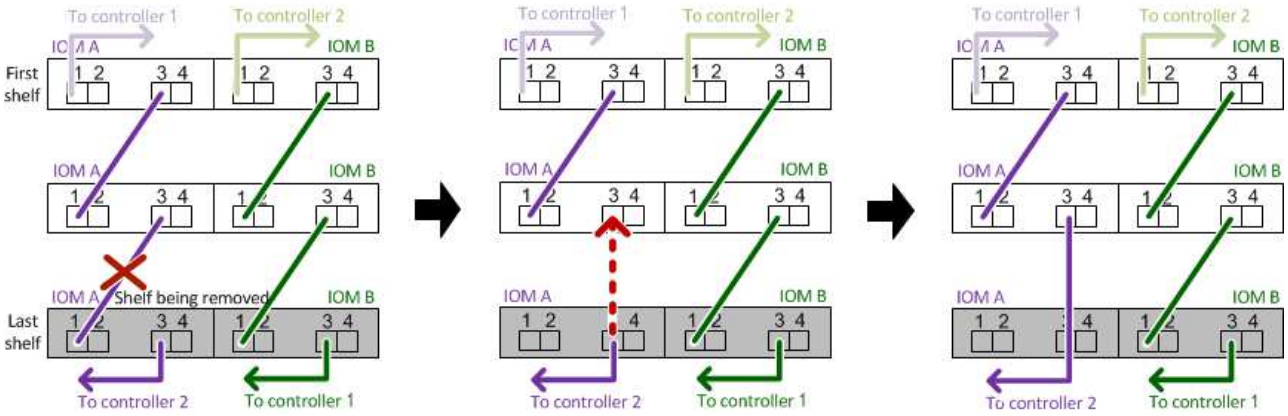

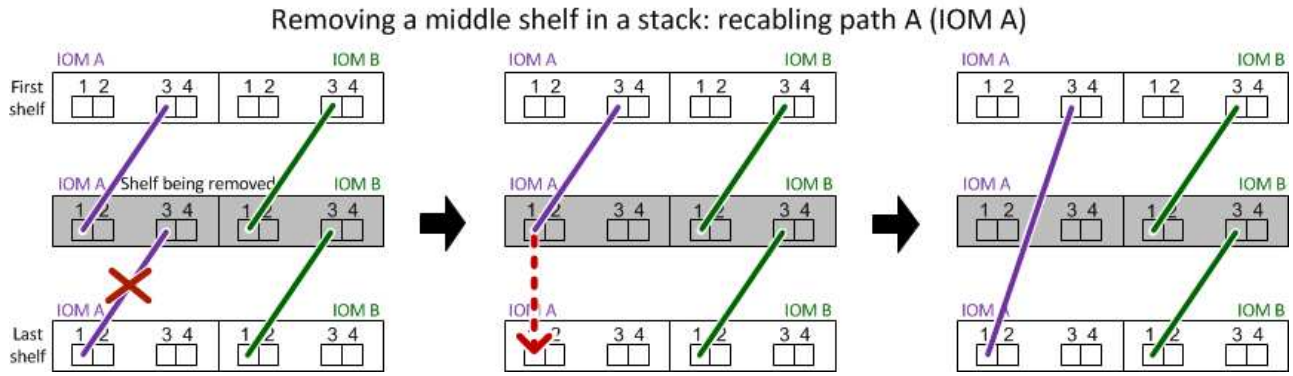

6. Verify that you bypassed the disk shelves you are removing and reestablished the path A (IOM A) stack connections correctly: `storage disk show -port`

   For HA pair configurations, you run this command from the clustershell of either controller. It might take up to a minute for the system to complete discovery.

   The first two lines of output show disk drives with connectivity through both path A and path B. The last two lines of output show disk drives with connectivity through a single-path, path B.

```
cluster::> storage show disk -port

PRIMARY  PORT SECONDARY      PORT TYPE SHELF BAY
-------- ---- ---------      ---- ---- ----- ---
1.20.0   A    node1:6a.20.0  B    SAS  20    0
1.20.1   A    node1:6a.20.1  B    SAS  20    1
1.21.0   B    -              -    SAS  21    0
1.21.1   B    -              -    SAS  21    1
...
```

7. The next step depends on the `storage disk show -port` command output:

If the output shows…	Then…
All disk drives in the stack are connected through path A and path B except for the ones in the disk shelves you disconnected, which are only connected through path B	Go to the next step. You successfully bypassed the disk shelves you are removing and reestablished path A on the remaining disk drives in the stack.
Anything other than the above	Repeat Step 5 and Step 6. You must correct the cabling.

8. Complete the following substeps for the disk shelves (in the stack) you are removing:
   a. Repeat Step 5 through Step 7 for path B.

> When you repeat Step 7 and if you have recabled the stack correctly, you should only see all remaining disk drives connected through path A and path B.

b. Repeat Step 1 to confirm that your system configuration is the same as before you removed one or more disk shelves from a stack.

c. Go to the next step.

9. If when you removed ownership from the disk drives (as part of the preparation for this procedure), you disabled disk ownership automatic assignment, reenable it by entering the following command; otherwise, go to the next step: `storage disk option modify -autoassign on`

   For HA pair configurations, you run the command from the clustershell of both controllers.

10. Power off the disk shelves you disconnected and unplug the power cords from the disk shelves.

11. Remove the disk shelves from the rack or cabinet.

    To make a disk shelf lighter and easier to maneuver, remove the power supplies and I/O modules (IOMs).

    For DS460C disk shelves, a fully loaded shelf can weigh approximately 247 lbs (112 kg); therefore, exercise the following caution when removing a shelf from a rack or cabinet.

    > It is recommended that you use a mechanized lift or four people using the lift handles to safely move a DS460C shelf.

    Your DS460C shipment was packaged with four detachable lift handles (two for each side). To use the lift handles, you install them by inserting the tabs of the handles into the slots in the side of the shelf and pushing up until they click into place. Then, as you slide the disk shelf onto the rails, you detach one set of handles at a time using the thumb latch. The following illustration shows how to attach a lift handle.

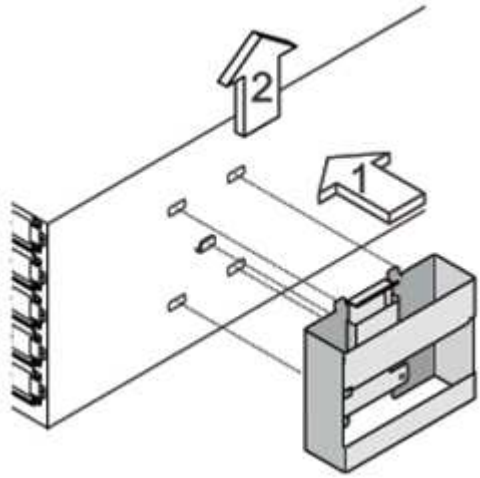

    If you are moving the DS460C shelf to a different part of the data center or transporting it to a different location, see the "Move or transport DS460C shelves" section.

Move or transport DS460C shelves

If you move a DS460C shelf to a different part of the data center or transport the shelf to a different location, you need to remove the drives from the drive drawers to avoid possible damage to the drive drawers and drives.

- If when you installed DS460C shelves as part of your new system installation or shelf hot-add, you saved the drive packaging materials, use these to repackage the drives before moving them.

  If you did not save the packaging materials, you should place drives on cushioned surfaces or use alternate cushioned packaging. Never stack drives on top of each other.

- Before handling drives, wear an ESD wrist strap grounded to an unpainted surface on your storage enclosure chassis.

  If a wrist strap is unavailable, touch an unpainted surface on your storage enclosure chassis before handling a drive.

- You should take steps to handle drives carefully:
  - Always use two hands when removing, installing, or carrying a drive to support its weight.

    Do not place hands on the drive boards exposed on the underside of the drive carrier.

  - Be careful not to bump drives against other surfaces.
  - Drives should be kept away from magnetic devices.

    Magnetic fields can destroy all data on a drive and cause irreparable damage to the drive circuitry.

Monitor disk shelf LEDs - shelves with IOM12/IOM12B modules

You can monitor the health of your disk shelf by understanding the location and status conditions of the LEDs on your disk shelf components.

Operator display panel LEDs

The LEDs on the disk shelf front operator display panel indicate whether your disk shelf is functioning normally or there are problems with the hardware.

The following table describes the three LEDs on the operator display panel used in DS460C, DS224C, and DS212C disk shelves:

LED icon	LED name	State	Description
	Power	Solid green	One or more power supplies are supplying power to the disk shelf.

LED icon	LED name	State	Description
!	Attention	Solid amber	An error occurred with the function of one of more FRUs: the disk shelf, disk drives, IOM12/IOM12B modules, or power supplies. Check event messages to determine corrective action to take.
		Blinking amber	The shelf ID is in a pending state. Power cycle the disk shelf for the shelf ID to take affect.
	Location	Solid blue	The system administrator activated this LED function to aid in physically locating the disk shelf requiring service. The location LED on the operator display panel and both IOM12/IOM12B modules illuminate when this LED function is activated. Location LEDs automatically turn off after 30 minutes.

Depending on your disk shelf model, the operator display panel looks different; however, the three LEDs are arranged in the same way.

The following illustration is of a DS224C disk shelf operator display panel with the end cap on:

IOM12/IOM12B module LEDs

The LEDs on the IOM12/IOM12B module indicate whether the module is functioning normally, whether it is ready for I/O traffic, and whether there are any problems with the hardware.

The following table describes IOM12/IOM12B module LEDs associated with the function of the module and the function of each SAS port on the module.

The IOM12/IOM12B module is used in DS460C, DS224C, and DS212C disk shelves.

LED icon	LED name	State	Description
!	Attention	Solid amber	IOM12/IOM12B module function: An error occurred with the function of the IOM12/IOM12B module. SAS port function: Less than all four SAS lanes established a link (with either an adapter or another disk shelf). Check event messages to determine corrective action to take.
LNK	Port link	Solid green	One or more of the four SAS lanes established a link (with either an adapter or another disk shelf).

LED icon	LED name	State	Description
	Location	Solid blue	The system administrator activated this LED function to aid in physically locating the disk shelf with the failed IOM12/IOM12B module. The location LED on the operator display panel and both IOM12/IOM12B modules illuminate when this LED function is activated. Location LEDs automatically turn off after 30 minutes.

The following illustration is for an IOM12 module:

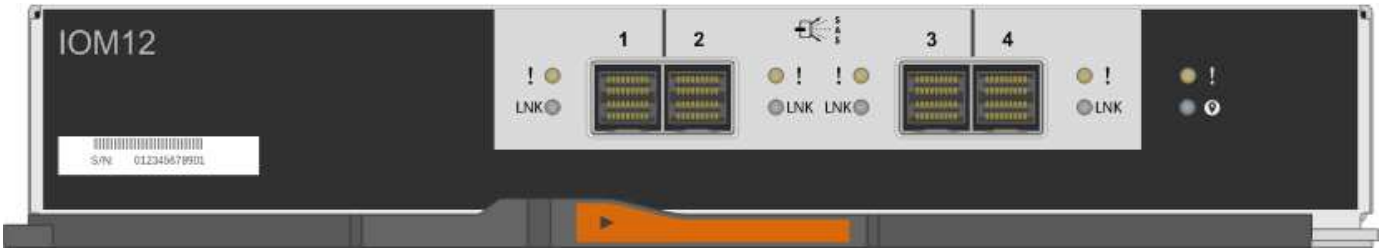

The IOM12B modules are distinguished by a blue stripe and an "IOM12B" label:

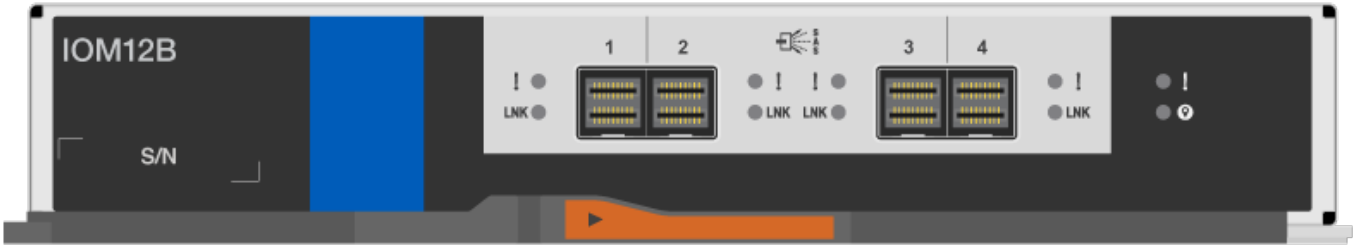

Power supply LEDs

The LEDs on the power supply indicate whether the power supply is functioning normally or there are hardware problems.

The following table describes the two LEDs on power supplies used in DS460C, DS224C, and DS212C disk shelves:

LED icon	LED name	State	Description
	Power	Solid green	The power supply is functioning correctly.
		Off	The power supply failed, the AC switch is turned off, the AC power cord is not properly installed, or electricity is not being properly supplied to the power supply. Check event messages to determine corrective action to take.
!	Attention	Solid amber	An error occurred with the function of the power supply. Check event messages to determine corrective action to take.

Depending on your disk shelf model, power supplies can be different, dictating the location of the two LEDs.

The following illustration is for a power supply used in a DS460C disk shelf.

The two LED icons act as the labels and LEDs, meaning the icons themselves illuminate—there are no adjacent LEDs.

The following illustration is for a power supply used in a DS224C or DS212C disk shelf:

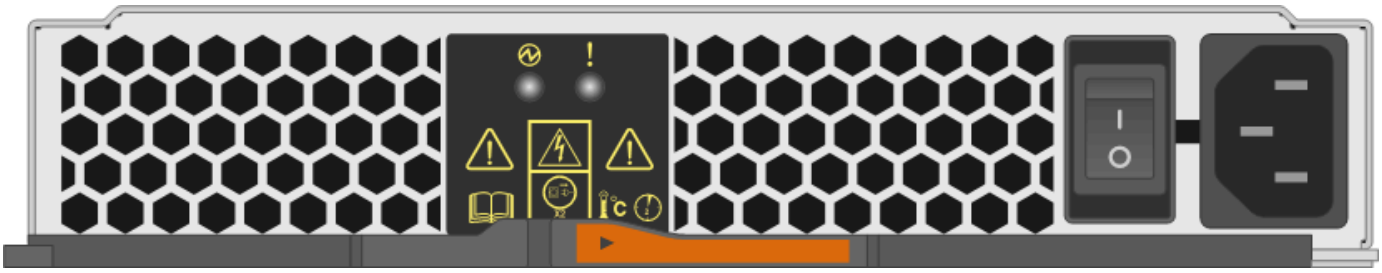

Fan LEDs on DS460C disk shelves

The LEDs on the DS460C fans indicate whether the fan is functioning normally or there are hardware problems.

The following table describes the LEDs on fans used in DS460C disk shelves:

Item	LED name	State	Description
1	Attention	Solid amber	An error occurred with the function of the fan. Check event messages to determine corrective action to take.

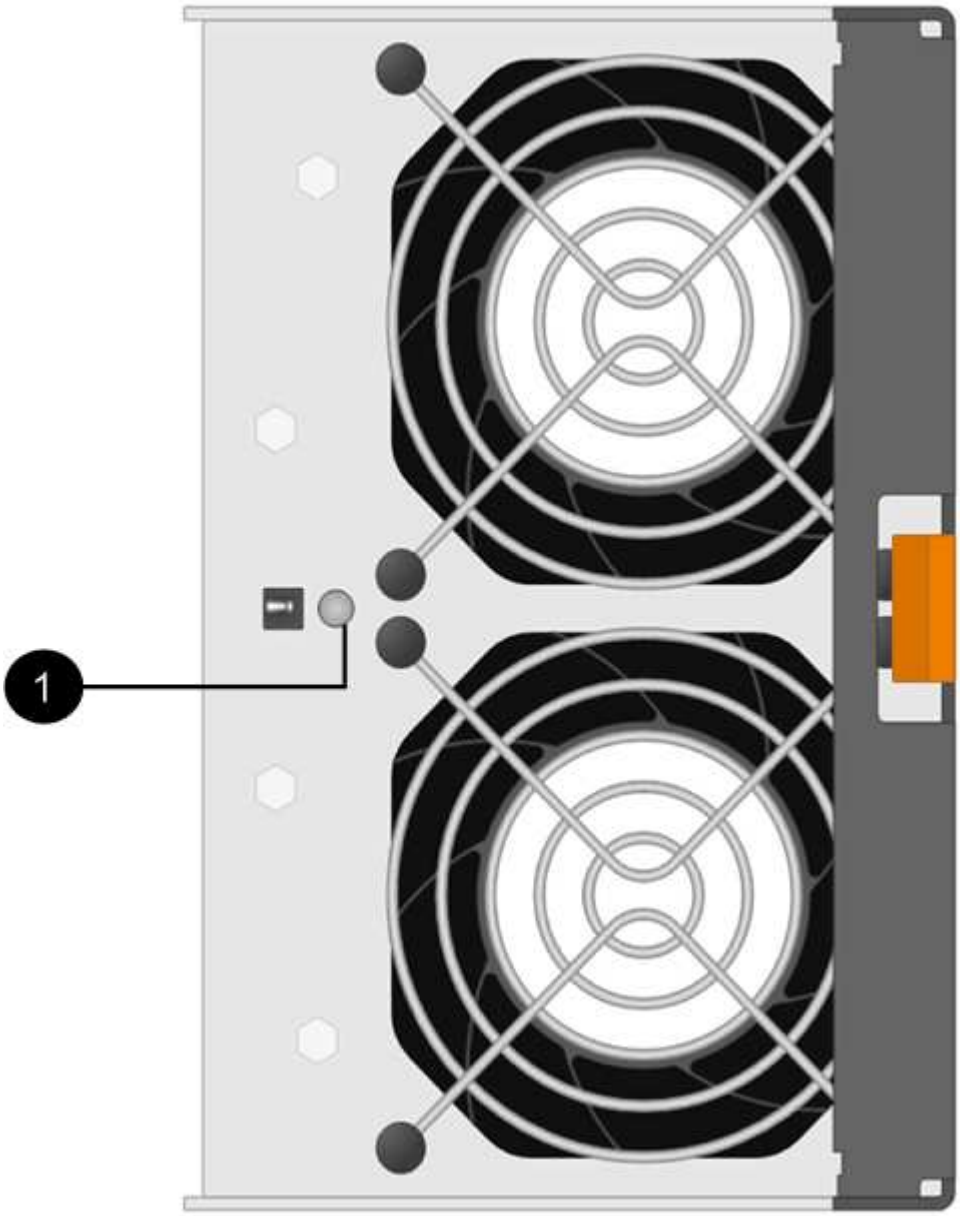

Disk drive LEDs

The LEDs on a disk drive indicates whether it is functioning normally or there are problems with the hardware.

Disk drive LEDs for DS224C and DS212C disk shelves

The following table describes the two LEDs on the disk drives used in DS224C and DS212C disk shelves:

Callout	LED name	State	Description
1	Activity	Solid green	The disk drive has power.
		Blinking green	The disk drive has power and I/O operations are in progress.
2	Attention	Solid amber	An error occurred with the function of the disk drive. Check event messages to determine corrective action to take.

Depending on your disk shelf model, disk drives are arranged vertically or horizontally in the disk shelf, dictating the location of the two LEDs.

The following illustration is for a disk drive used in a DS224C disk shelf.

DS224C disk shelves use 2.5-inch disk drives arranged vertically in the disk shelf.

The following illustration is for a disk drive used in a DS212C disk shelf.

DS212C disk shelves use 3.5-inch disk drives or 2.5-inch disk drives in carriers arranged horizontally in the disk shelf.

Disk drive LEDs for DS460C disk shelves

The following illustration and table describes the drive activity LEDs on the drive drawer and their operational states:

Location	LED	Status indicator	Description
1	Attention: Drawer attention for each drawer	Solid amber	A component within the drive drawer requires operator attention.
		Off	No drive or other component in the drawer requires attention and no drive in the drawer has an active locate operation.
		Blinking amber	A locate drive operation is active for any drive within the drawer.
2-13	Activity: Drive activity for drives 0 through 11 in the drive drawer	Green	The power is turned on and the drive is operating normally.
		Blinking green	The drive has power, and I/O operations are in progress.
		Off	The power is turned off.

When the drive drawer is open, an attention LED can be seen in front of each drive.

1	Attention LED light on

Replace a fan module in a DS460C disk shelf - shelves with IOM12/IOM12B modules

Each DS460C drive shelf includes two fan modules. If a fan module fails, you must replace it as soon as possible to ensure that the shelf has adequate cooling. When you remove the failed fan module, you do not have to turn off power to your disk shelf.

About this task

You must ensure that you remove and replace the fan module within 30 minutes to prevent the system from overheating.

Steps

1. Put on antistatic protection.
2. Unpack the new fan module, and place it on a level surface near the shelf.

   Save all packing material for use when returning the failed fan.

3. From the back of the disk shelf, look at the Attention LEDs to locate the fan module you need to remove.

   You must replace the fan module that has its Attention LED on.

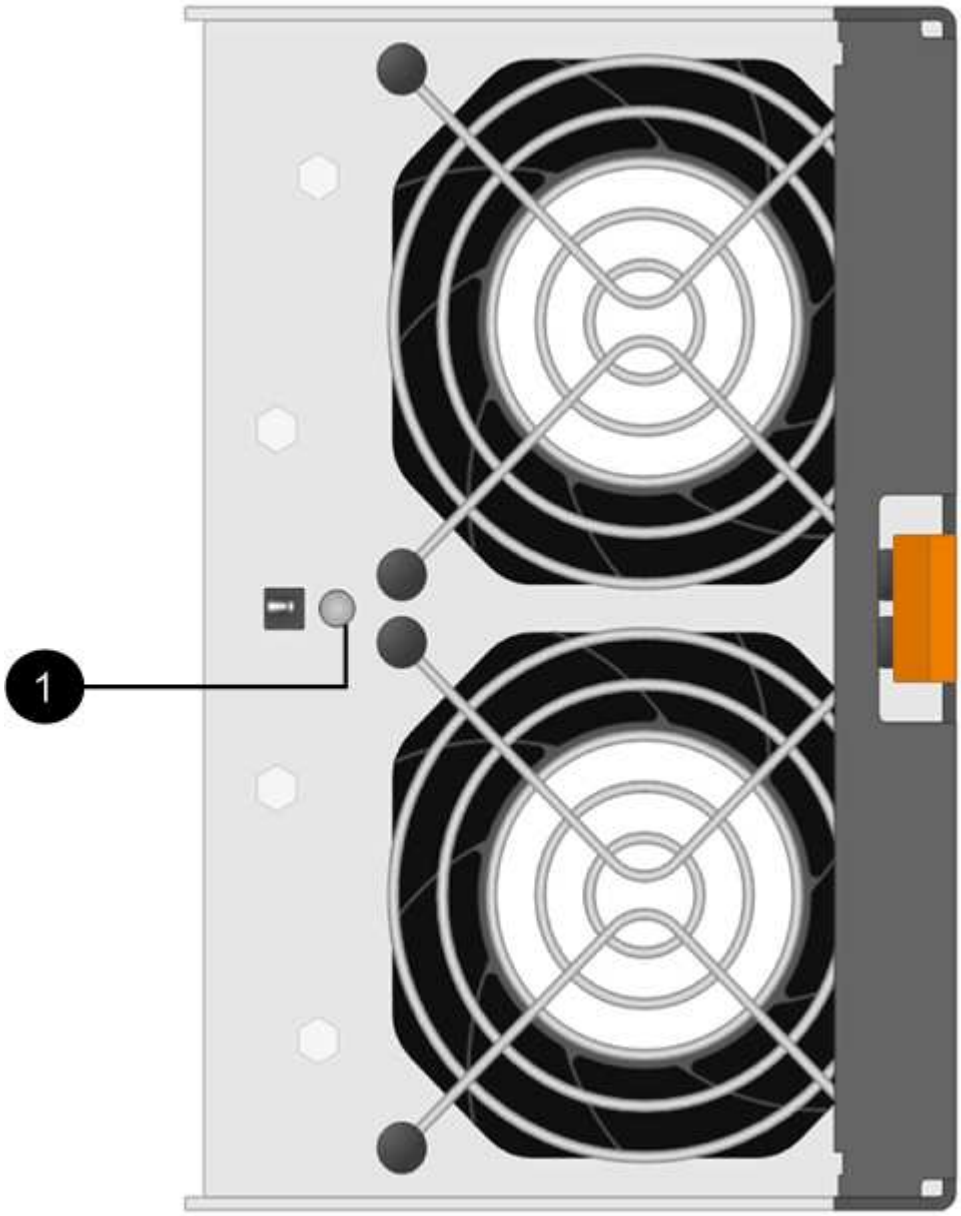

Item	LED name	State	Description
1	Attention	Solid amber	The fan has a fault

4. Press the orange tab to release the fan module handle.

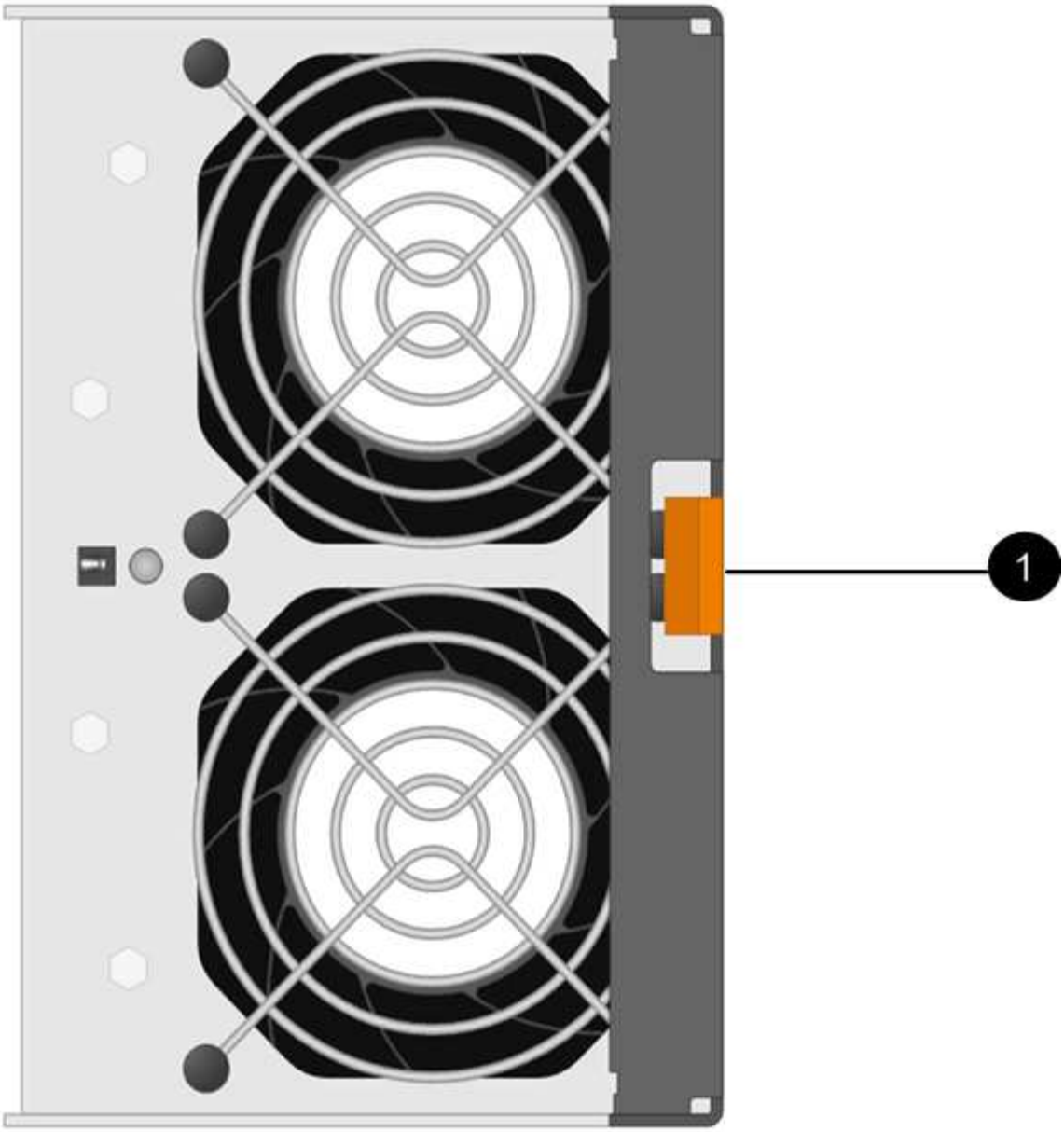

1	Tab that you press to release the fan module handle

5. Use the fan module handle to pull the fan module out of the shelf.

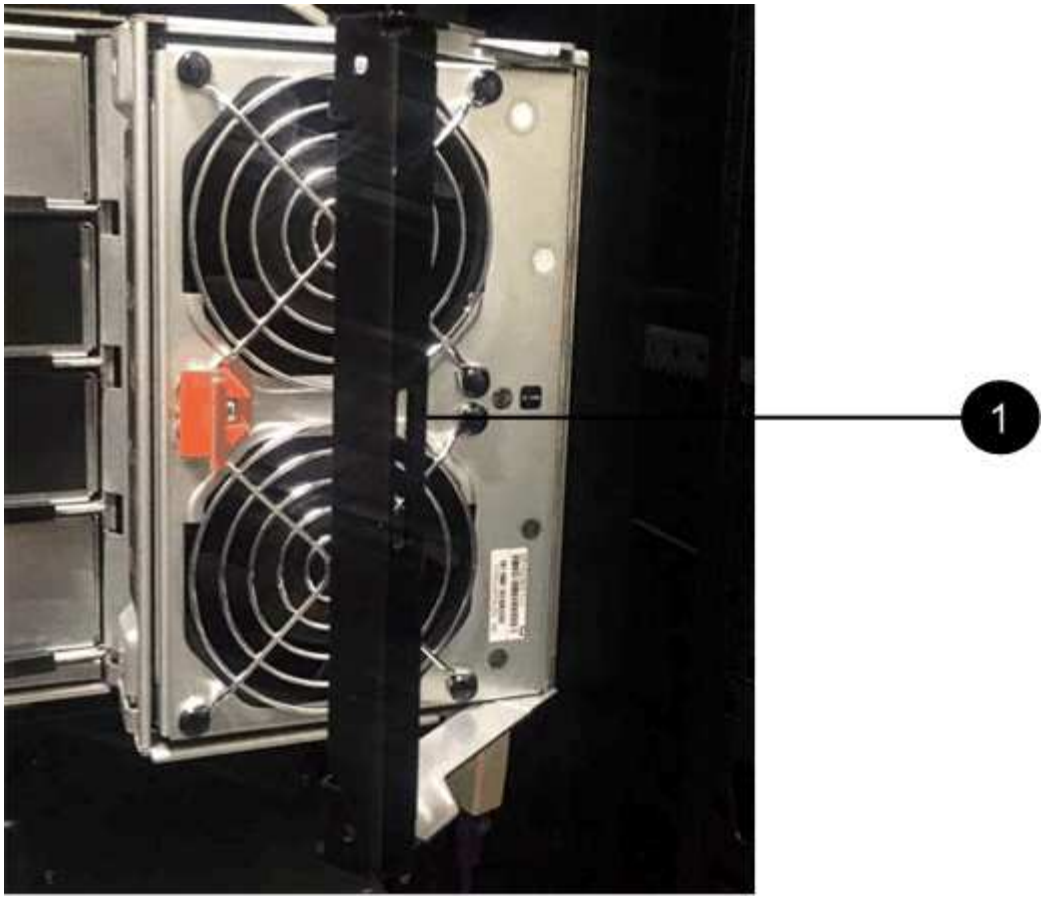

1	Handle to pull the fan module out

6. Slide the replacement fan module all the way into the shelf, moving the fan module handle to the side until it latches with the orange tab.
7. Check the amber Attention LED on the new fan module.

> After you replace the fan module, the Attention LED stays on (solid amber) while the firmware checks that the fan module was installed correctly. The LED goes off after this process is complete.

8. Return the failed part to NetApp, as described in the RMA instructions shipped with the kit.

   Contact technical support at NetApp Support, 888-463-8277 (North America), 00-800-44-638277 (Europe), or +800-800-80-800 (Asia/Pacific) if you need the RMA number.

Hot-swap or replace an IOM12/IOM12B module - shelves with IOM12/IOM12B modules

Your system configuration determines whether you can perform a nondisruptive shelf IOM hot-swap or a disruptive shelf IOM replacement when a shelf IOM fails.

Before you begin

All other components in the system—including the other IOM12/IOM12B module—must be functioning properly.

About this task

- This procedure applies to shelves having IOM12 modules and shelves having IOM12B modules.

> This procedure is for like-for-like shelf IOM hot-swaps or replacements. This means you can only replace an IOM12 module with another IOM12 module or replace an IOM12B module with another IOM12B module. (Your shelf can have two IOM12 modules or have two IOM12B modules.)

- The IOM12 modules and the IOM12B modules can be distinguished by their appearance:

  The IOM12 modules are distinguished by an "IOM12" label:

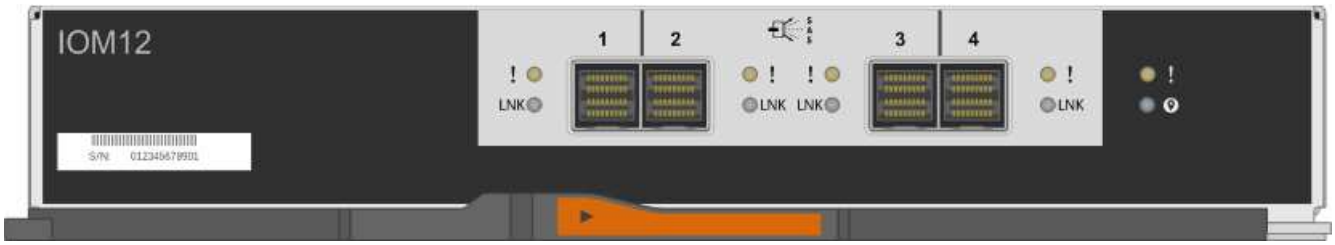

  The IOM12B modules are distinguished by a blue stripe and an "IOM12B" label:

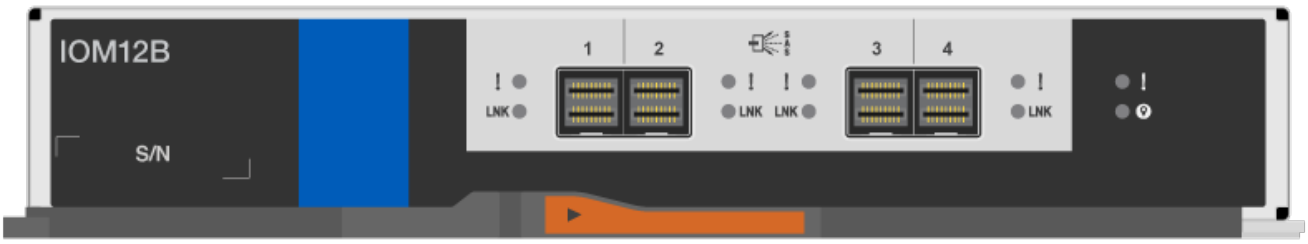

- For multipathed (multipath HA or multipath), tri-path HA, and quad-pathed (quad-path HA or quad-path) configurations, you can hot-swap a shelf IOM (nondisruptively replace a shelf IOM in a system that is powered on and serving data—I/O is in progress).
- For FAS2600 series and FAS2700 series single-path HA configurations, you must perform a takeover and giveback operation to replace a shelf IOM in a system that is powered on and serving data—I/O is in progress.
- For FAS2600 series single-path configurations, you must halt your system to replace a shelf IOM.

> If you attempt to hot-swap a shelf IOM on a disk shelf with a single-path connection, you will lose all access to the disk drives in the disk shelf as well as any disk shelves beneath. You could also bring down your entire system.

- The best practice is to have the current versions of disk shelf (IOM) firmware and disk drive firmware on your system before adding new disk shelves, shelf FRU components, or SAS cables.

  Current versions of firmware can be found on the NetApp Support Site.

  NetApp Downloads: Disk Shelf Firmware

NetApp Downloads: Disk Drive Firmware

- Disk shelf (IOM) firmware is automatically updated (nondisruptively) on a new shelf IOM with a non-current firmware version.

  Shelf IOM firmware checks occur every ten minutes. An IOM firmware update can take up to 30 minutes.

- If needed, you can turn on the disk shelf's location (blue) LEDs to aid in physically locating the affected disk shelf: `storage shelf location-led modify -shelf-name shelf_name -led-status on`

  A disk shelf has three location LEDs: one on the operator display panel and one on each shelf IOM. Location LEDs remain illuminated for 30 minutes. You can turn them off by entering the same command, but using the off option.

- If needed, you can refer to the Monitoring disk shelf LEDs section for information about the meaning and location of disk shelf LEDs on the operator display panel and FRU components.

Steps

1. Properly ground yourself.
2. Unpack the new shelf IOM and set it on a level surface near the disk shelf.

   Save all packaging materials for use when returning the failed shelf IOM.

3. Physically identify the failed shelf IOM from the system console warning message and the illuminated attention (amber) LED on the failed shelf IOM.
4. Perform one of the following actions based on the type of configuration you have:

If you have a…	Then…
Multipath HA, tri-path HA, multipath, quad-path HA, or quad-path configuration	Go to the next step.
FAS2600 series and FAS2700 series single-path HA configuration	a. Determine the target node (the node the failed shelf IOM belongs to). IOM A belongs to Controller 1. IOM B belongs to Controller 2. b. Take over the target node: `storage failover takeover -bynode partner HA node`
FAS2600 series single-path configuration	a. Shut down the system from the system console: `halt` b. Verify that your system halted by checking the storage system console.

5. Disconnect the cabling from the shelf IOM that you are removing.

   Make note of the shelf IOM ports each cable is connected to.

6. Press the orange latch on the shelf IOM cam handle until it releases, and then open the cam handle fully to release the shelf IOM from the mid plane.

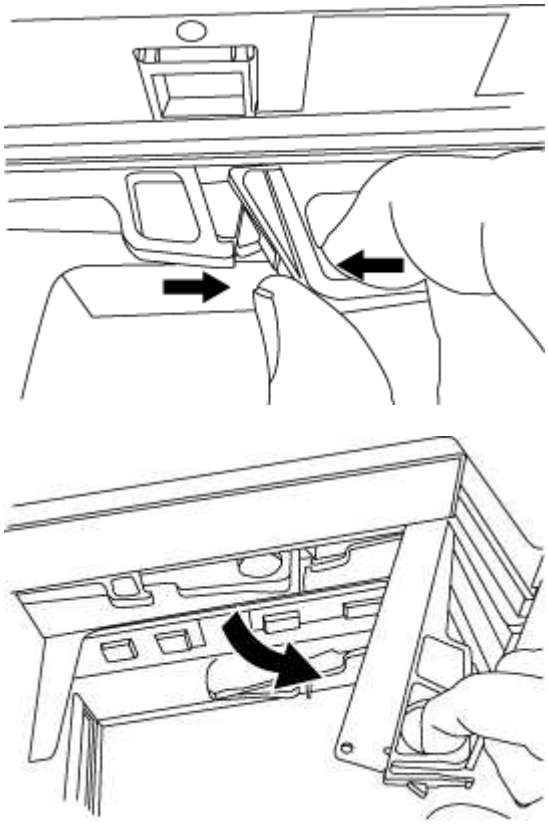

7. Use the cam handle to slide the shelf IOM out of the disk shelf.

   When handling a shelf IOM, always use two hands to support its weight.

8. Wait at least 70 seconds after removing the shelf IOM before you install the new shelf IOM.

   Waiting at least 70 seconds enables the driver to register the shelf ID correctly.

9. Using two hands, with the cam handle of the new shelf IOM in the open position, support and align the edges of the new shelf IOM with the opening in the disk shelf, and then firmly push the new shelf IOM until it meets the mid plane.

   Do not use excessive force when sliding the shelf IOM into the disk shelf; you might damage the connectors.

10. Close the cam handle so that the latch clicks into the locked position and the shelf IOM is fully seated.
11. Reconnect the cabling.

    The SAS cable connectors are keyed; when oriented correctly into an IOM port, the connector clicks into place and the IOM port LNK LED illuminates green. You insert a SAS cable connector into an IOM port with the pull tab oriented down (on the underside of the connector).

12. Perform one of the following actions based on the type of configuration you have:

If you have a…	Then…
Multipath HA, tri-path HA, multipath, quad-path HA, or quad-path configuration	Go to the next step.
FAS2600 series and FAS2700 series single-path HA configuration	Give back the target node: `storage failover giveback -fromnode partner_HA_node`
FAS2600 series single-path configuration	Reboot your system.

13. Verify that the shelf IOM port links have been established.

    For each module port that you cabled, the LNK (green) LED illuminates when one or more of the four SAS lanes have established a link (with either an adapter or another disk shelf).

14. Return the failed part to NetApp, as described in the RMA instructions shipped with the kit.

    Contact technical support at NetApp Support, 888-463-8277 (North America), 00-800-44-638277 (Europe), or +800-800-80-800 (Asia/Pacific) if you need the RMA number or additional help with the replacement procedure.

Hot-swap a power supply - shelves with IOM12/IOM12B modules

You can hot-swap a failed power supply in a DS460C, DS224C, or DS212C disk shelf.

Before you begin

All other components in the system—including the other power supply—must be functioning properly.

About this task

- If you are replacing more than one power supply, you must do so one at a time so that the disk shelf maintains power.
- You must replace a power supply within two minutes of removal to minimize disruption to the disk shelf's airflow.
- Always use two hands when removing, installing, or carrying a power supply to support its weight.
- The best practice is to have the current versions of disk shelf (IOM) firmware and disk drive firmware on your system before adding new disk shelves, shelf FRU components, or SAS cables.

  Current versions of firmware can be found on the NetApp Support Site.

  NetApp Downloads: Disk Shelf Firmware

  NetApp Downloads: Disk Drive Firmware

- If needed, you can turn on the disk shelf's location (blue) LEDs to aid in physically locating the affected disk shelf: `storage shelf location-led modify -shelf-name shelf_name -led-status on`

  A disk shelf has three location LEDs: one on the operator display panel and one on each shelf IOM. Location LEDs remain illuminated for 30 minutes. You can turn them off by entering the same command,

but using the off option.

- If needed, you can refer to the Monitoring disk shelf LEDs section for information about the meaning and location of disk shelf LEDs on the operator display panel and FRU components.

Steps

1. Properly ground yourself.
2. Unpack the new power supply and set it on a level surface near the shelf.

   Save all packing materials for use when returning the failed power supply.

3. Physically identify the failed power supply from the system console warning message and the illuminated attention (amber) LED on the power supply.
4. Turn off the failed power supply and disconnect the power cable:
   a. Turn off the power switch on the power supply.
   b. Open the power cord retainer and unplug the power cord from the power supply.
   c. Unplug the power cord from the power source.
5. Press the orange latch on the power supply cam handle until it releases, and then open the cam handle to fully release the power supply from the mid plane.

   The following illustration is for a power supply used in a DS224C or DS212C disk shelf; however, the latch operates the same way for power supplies used in DS460C disk shelves.

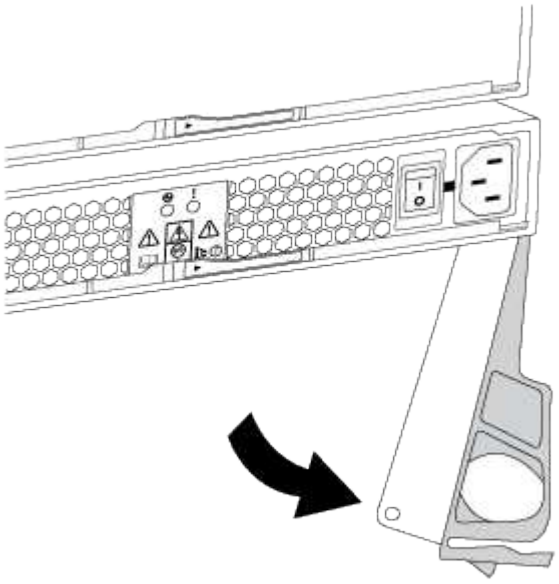

6. Use the cam handle to slide the power supply out of the disk shelf.

   If you have a DS224C or DS212C disk shelf, as you remove the power supply, a flap swings into place to block the empty bay, helping to maintain air flow and cooling.

   When handling a power supply, always use two hands to support its weight.

7. Make sure that the on/off switch of the new power supply is in the Off position.
8. Using two hands, with the cam handle of the new power supply in the open position, support and align the edges of the new power supply with the opening in the disk shelf, and then firmly push the new power supply until it meets the mid plane.

   Do not use excessive force when sliding the power supply into the disk shelf; you might damage the connectors.

9. Close the cam handle so that the latch clicks into the locked position and the power supply is fully seated.
10. Reconnect the power supply cable and turn on the new power supply:
    a. Reconnect the power cord to the power source.
    b. Reconnect the power cord to the power supply and secure the power cord with the power cord retainer.
    c. Turn on the power switch.

       The power supply's power (green) LED and attention (amber) LED illuminate, and then within 40 seconds, the attention (amber) LED turns off.

11. Return the failed part to NetApp, as described in the RMA instructions shipped with the kit.

    Contact technical support at NetApp Support, 888-463-8277 (North America), 00-800-44-638277 (Europe), or +800-800-80-800 (Asia/Pacific) if you need the RMA number or additional help with the replacement procedure.

Copyright information

Copyright © 2024 NetApp, Inc. All Rights Reserved. Printed in the U.S. No part of this document covered by copyright may be reproduced in any form or by any means—graphic, electronic, or mechanical, including photocopying, recording, taping, or storage in an electronic retrieval system—without prior written permission of the copyright owner.

Software derived from copyrighted NetApp material is subject to the following license and disclaimer:

THIS SOFTWARE IS PROVIDED BY NETAPP “AS IS” AND WITHOUT ANY EXPRESS OR IMPLIED WARRANTIES, INCLUDING, BUT NOT LIMITED TO, THE IMPLIED WARRANTIES OF MERCHANTABILITY AND FITNESS FOR A PARTICULAR PURPOSE, WHICH ARE HEREBY DISCLAIMED. IN NO EVENT SHALL NETAPP BE LIABLE FOR ANY DIRECT, INDIRECT, INCIDENTAL, SPECIAL, EXEMPLARY, OR CONSEQUENTIAL DAMAGES (INCLUDING, BUT NOT LIMITED TO, PROCUREMENT OF SUBSTITUTE GOODS OR SERVICES; LOSS OF USE, DATA, OR PROFITS; OR BUSINESS INTERRUPTION) HOWEVER CAUSED AND ON ANY THEORY OF LIABILITY, WHETHER IN CONTRACT, STRICT LIABILITY, OR TORT (INCLUDING NEGLIGENCE OR OTHERWISE) ARISING IN ANY WAY OUT OF THE USE OF THIS SOFTWARE, EVEN IF ADVISED OF THE POSSIBILITY OF SUCH DAMAGE.

NetApp reserves the right to change any products described herein at any time, and without notice. NetApp assumes no responsibility or liability arising from the use of products described herein, except as expressly agreed to in writing by NetApp. The use or purchase of this product does not convey a license under any patent rights, trademark rights, or any other intellectual property rights of NetApp.

The product described in this manual may be protected by one or more U.S. patents, foreign patents, or pending applications.

LIMITED RIGHTS LEGEND: Use, duplication, or disclosure by the government is subject to restrictions as set forth in subparagraph (b)(3) of the Rights in Technical Data -Noncommercial Items at DFARS 252.227-7013 (FEB 2014) and FAR 52.227-19 (DEC 2007).

Data contained herein pertains to a commercial product and/or commercial service (as defined in FAR 2.101) and is proprietary to NetApp, Inc. All NetApp technical data and computer software provided under this Agreement is commercial in nature and developed solely at private expense. The U.S. Government has a non-exclusive, non-transferrable, nonsublicensable, worldwide, limited irrevocable license to use the Data only in connection with and in support of the U.S. Government contract under which the Data was delivered. Except as provided herein, the Data may not be used, disclosed, reproduced, modified, performed, or displayed without the prior written approval of NetApp, Inc. United States Government license rights for the Department of Defense are limited to those rights identified in DFARS clause 252.227-7015(b) (FEB 2014).

Trademark information

NETAPP, the NETAPP logo, and the marks listed at http://www.netapp.com/TM are trademarks of NetApp, Inc. Other company and product names may be trademarks of their respective owners.