磁盘和聚合

ONTAP 9

NetApp
February 25, 2022

This PDF was generated from https://docs.netapp.com/zh-cn/ontap/concepts/disks-aggregates-concept.html on February 25, 2022. Always check docs.netapp.com for the latest.

目录

磁盘和聚合 1
磁盘和聚合概述 1
聚合和 RAID 组 1
根数据分区 2

磁盘和聚合

磁盘和聚合概述

aggregodes 是由节点管理的磁盘的容器。您可以使用聚合隔离具有不同性能需求的工作负载，使用不同的访问模式对数据进行分层，或者出于监管目的隔离数据。

- 对于需要尽可能低延迟和最高性能的业务关键型应用程序，您可以创建一个完全由 SSD 组成的聚合。
- 要对不同访问模式的数据进行分层，您可以创建 *hybrid* 聚合， _ 将闪存部署为工作数据集的高性能缓存，同时对访问频率较低的数据使用低成本的 *HDD* 或对象存储。*FlashPool* 由 *SSD* 和 *HDD* 组成。_*SSD* 由一个连接了对象存储的纯 FabricPool 聚合组成。
- 如果出于监管目的需要将归档数据与活动数据隔离，则可以使用由容量 HDD 组成的聚合，也可以使用性能和容量 HDD 的组合。

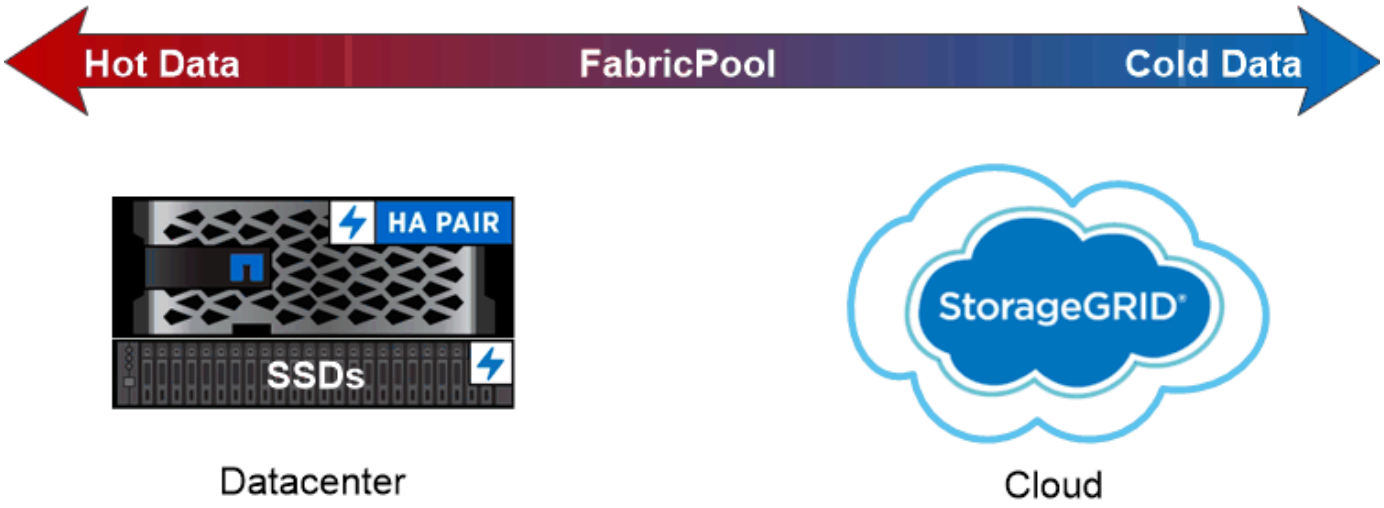

You can use a FabricPool to tier data with different access patterns, deploying SSDs for frequently accessed “hot” data and object storage for rarely accessed “cold” data.

聚合和 **RAID** 组

现代 RAID 技术可通过在备用磁盘上重建故障磁盘的数据来防止磁盘故障。系统会将 "`奇偶校验磁盘` " 上的索引信息与其余运行正常的磁盘上的数据进行比较，以重建缺少的数据，而无需停机或高昂的性能成本。

聚合包含一个或多个 _RAID 组。 _ 聚合的 _RAID 类型 _ 决定 RAID 组中的奇偶校验磁盘数以及 RAID 配置可防止的并发磁盘故障数。

默认 RAID 类型 RAID-DP （ RAID-DP （ RAID-DP 双奇偶校验）要求每个 RAID 组具有两个奇偶校验磁盘，并可防止在两个磁盘同时发生故障时丢失数据。对于 RAID-DP ，建议的 RAID 组大小介于 12 到 20 个 HDD 和 20 到 28 个 SSD 之间。

您可以通过在较高的规模估算建议端创建 RAID 组来分摊奇偶校验磁盘的开销成本。SSD 尤其如此，因为 SSD 比容量驱动器更可靠。对于 HDD 聚合，您应在最大化磁盘存储需求与较大 RAID 组所需重建时间较长等反向因素之间取得平衡。

根数据分区

每个节点都必须具有存储系统配置文件的根聚合。根聚合具有数据聚合的 RAID 类型

RAID-DP 类型的根聚合通常由一个数据磁盘和两个奇偶校验磁盘组成。如果系统已为聚合中的每个 RAID 组预留两个磁盘作为奇偶校验磁盘，则要为存储系统文件支付 "`奇偶校验税` " 是一项重大的费用。

根 - 数据分区 _ 通过在磁盘分区之间分配根聚合，在每个磁盘上保留一个小分区作为根分区，并为数据保留一个大分区来减少奇偶校验费用。

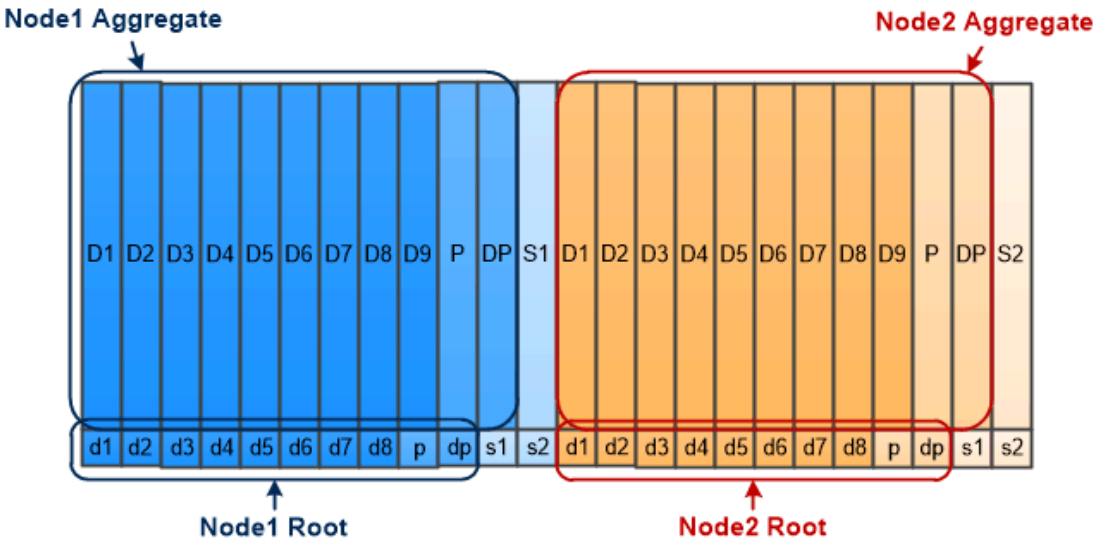

Root-data partitioning creates one small partition on each disk as the root partition and one large partition on each disk for data.

如图所示，用于存储根聚合的磁盘越多，根分区越小。这种情况也适用于一种名为 *root-data-data partition* 的根 - 数据分区形式，它会创建一个小分区作为根分区，并为数据创建两个大小相等的较大分区。

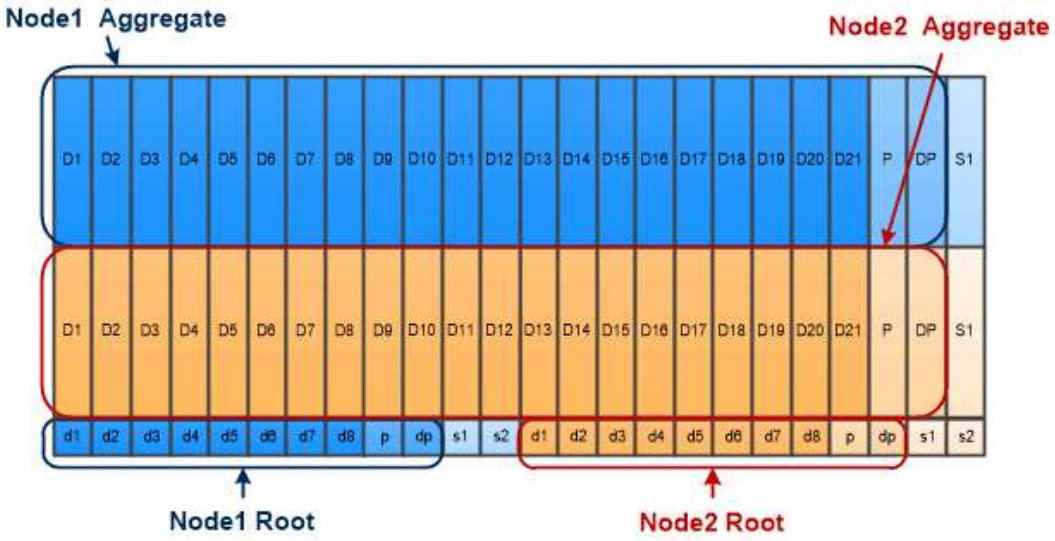

Root-data-data partitioning creates one small partition as the root partition and two larger, equally sized partitions for data.

这两种类型的根数据分区均属于 ONTAP 高级驱动器分区（ADP） _ 功能的一部分。这两种配置在出厂时均已配置：入门级 FAS2xxx， FAS9000， FAS8200， FAS80xx 和 AFF 系统的根数据分区，仅适用于 AFF 系统的根数据数据分区。

Copyright Information

Copyright © 2022 NetApp, Inc. All rights reserved. Printed in the U.S. No part of this document covered by copyright may be reproduced in any form or by any means-graphic, electronic, or mechanical, including photocopying, recording, taping, or storage in an electronic retrieval system- without prior written permission of the copyright owner.

Software derived from copyrighted NetApp material is subject to the following license and disclaimer:

THIS SOFTWARE IS PROVIDED BY NETAPP “AS IS” AND WITHOUT ANY EXPRESS OR IMPLIED WARRANTIES, INCLUDING, BUT NOT LIMITED TO, THE IMPLIED WARRANTIES OF MERCHANTABILITY AND FITNESS FOR A PARTICULAR PURPOSE, WHICH ARE HEREBY DISCLAIMED. IN NO EVENT SHALL NETAPP BE LIABLE FOR ANY DIRECT, INDIRECT, INCIDENTAL, SPECIAL, EXEMPLARY, OR CONSEQUENTIAL DAMAGES (INCLUDING, BUT NOT LIMITED TO, PROCUREMENT OF SUBSTITUTE GOODS OR SERVICES; LOSS OF USE, DATA, OR PROFITS; OR BUSINESS INTERRUPTION) HOWEVER CAUSED AND ON ANY THEORY OF LIABILITY, WHETHER IN CONTRACT, STRICT LIABILITY, OR TORT (INCLUDING NEGLIGENCE OR OTHERWISE) ARISING IN ANY WAY OUT OF THE USE OF THIS SOFTWARE, EVEN IF ADVISED OF THE POSSIBILITY OF SUCH DAMAGE.

NetApp reserves the right to change any products described herein at any time, and without notice. NetApp assumes no responsibility or liability arising from the use of products described herein, except as expressly agreed to in writing by NetApp. The use or purchase of this product does not convey a license under any patent rights, trademark rights, or any other intellectual property rights of NetApp.

The product described in this manual may be protected by one or more U.S. patents, foreign patents, or pending applications.

RESTRICTED RIGHTS LEGEND: Use, duplication, or disclosure by the government is subject to restrictions as set forth in subparagraph (c)(1)(ii) of the Rights in Technical Data and Computer Software clause at DFARS 252.277-7103 (October 1988) and FAR 52-227-19 (June 1987).

Trademark Information

NETAPP, the NETAPP logo, and the marks listed at http://www.netapp.com/TM are trademarks of NetApp, Inc. Other company and product names may be trademarks of their respective owners.