磁碟與集合體
ONTAP 9

NetApp
May 13, 2022

This PDF was generated from https://docs.netapp.com/zh-tw/ontap/concepts/disks-aggregates-concept.html on May 13, 2022. Always check docs.netapp.com for the latest.

目錄

磁碟與集合體 1
磁碟與集合體總覽 1
集合體與RAID群組 1
根資料分割 2

磁碟與集合體

磁碟與集合體總覽

_Aggregate是節點管理之磁碟的容器。您可以使用Aggregate來隔離具有不同效能需求的工作負載、以不同存取模式分層資料、或將資料隔離以符合法規要求。

- 對於需要最低延遲和最高效能的業務關鍵應用程式、您可以建立一個完全由SSD組成的集合體。
- 若要以不同的存取模式來分層資料、您可以建立_混合式Aggregate、_將Flash部署為高效能快取、以供工作資料集使用、同時使用成本較低的HDD或物件儲存設備來處理較少存取的資料。_FlashPool_包含SSD和HDD。_SUR__由一個All SSD集合體和一個附加的物件存放區組成。FabricPool
- 如果您需要將已歸檔的資料與作用中資料隔離、以供法規遵循之用、您可以使用由容量HDD所組成的集合體、或是結合效能與容量HDD。

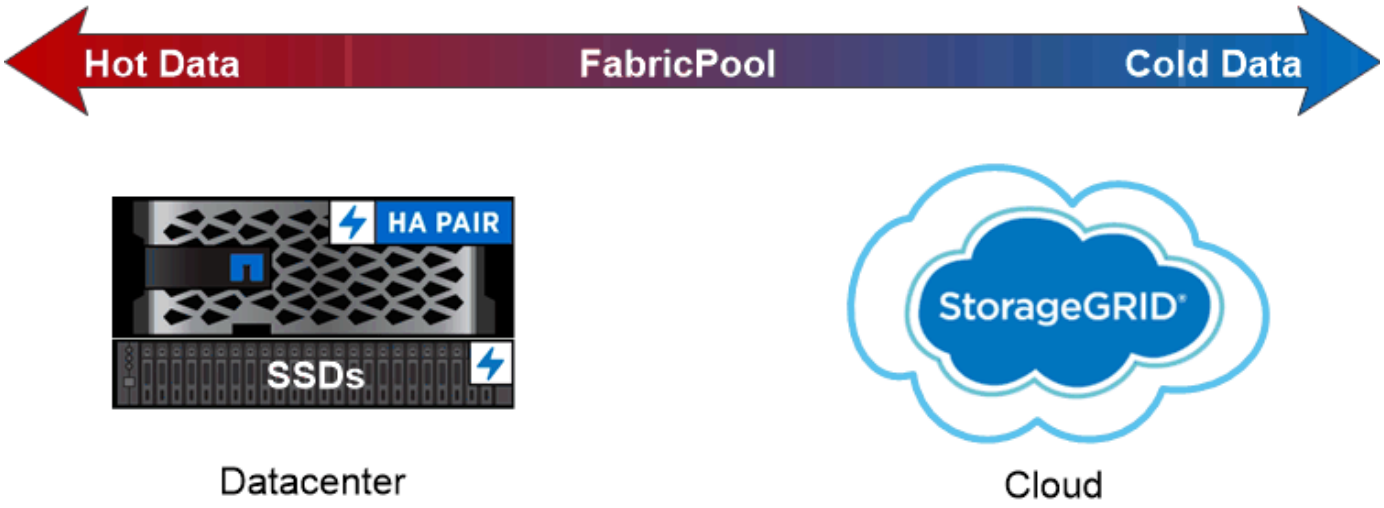

You can use a FabricPool to tier data with different access patterns, deploying SSDs for frequently accessed "hot" data and object storage for rarely accessed "cold" data.

集合體與RAID群組

現代化的RAID技術可在備用磁碟上重建故障磁碟的資料、避免磁碟故障。系統會將「同位元磁碟」上的索引資訊與剩餘健全磁碟上的資料進行比較、以重建遺失的資料、完全不需要停機或大幅降低效能成本。

集合體由一或多個_RAID群組所組成。_集合體的_RAID類型_決定RAID群組中的同位元檢查磁碟數目、以及RAID組態保護的同時磁碟故障數目。

預設的RAID類型RAID-DP（RAID雙同位元檢查）每個RAID群組需要兩個同位元檢查磁碟、可在兩個磁碟同時故障時防止資料遺失。對於RAID-DP、建議的RAID群組大小介於12至20個HDD、以及20至28個SSD之間。

您可以在規模調整建議的較高端建立RAID群組、以分散同位元磁碟的成本。尤其是SSD、它比容量磁碟機更可

靠。對於HDD Aggregate、您應該在最大化磁碟儲存空間的需求與反補貼因素之間取得平衡、例如較大RAID群組所需的重建時間較長。

根資料分割

每個節點都必須具有儲存系統組態檔案的根Aggregate。根Aggregate具有資料Aggregate的RAID類型。

System Manager不支援根資料或根資料資料分割。

RAID-DP類型的根Aggregate通常由一個資料磁碟和兩個同位元檢查磁碟組成。當系統已為集合體中的每個RAID群組保留兩個磁碟做為同位元磁碟時、這是支付儲存系統檔案的重大「同位元檢查稅金」。

_root-data partition_可在磁碟分割之間分配根Aggregate、將每個磁碟上的一個小分割區保留為根分割區、並將一個大分割區保留給資料、藉此降低同位元檢查的稅金。

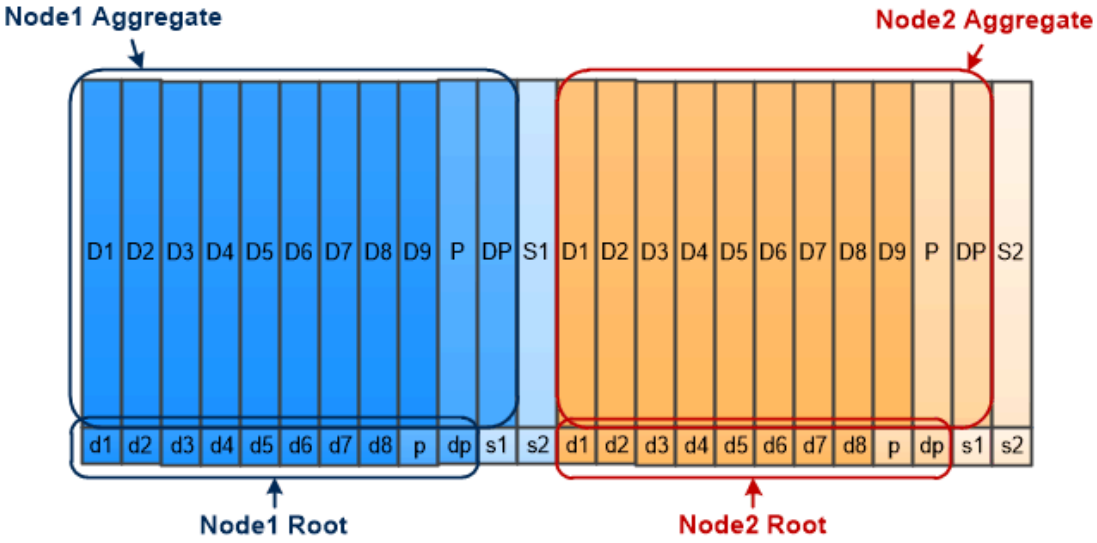

Root-data partitioning creates one small partition on each disk as the root partition and one large partition on each disk for data.

如圖所示、用於儲存根Aggregate的磁碟越多、根分割區就越小。這也是一種稱為_root-data-data partition_的根資料分割形式、它會建立一個小分割區做為根分割區、以及兩個較大、大小相同的資料分割區。

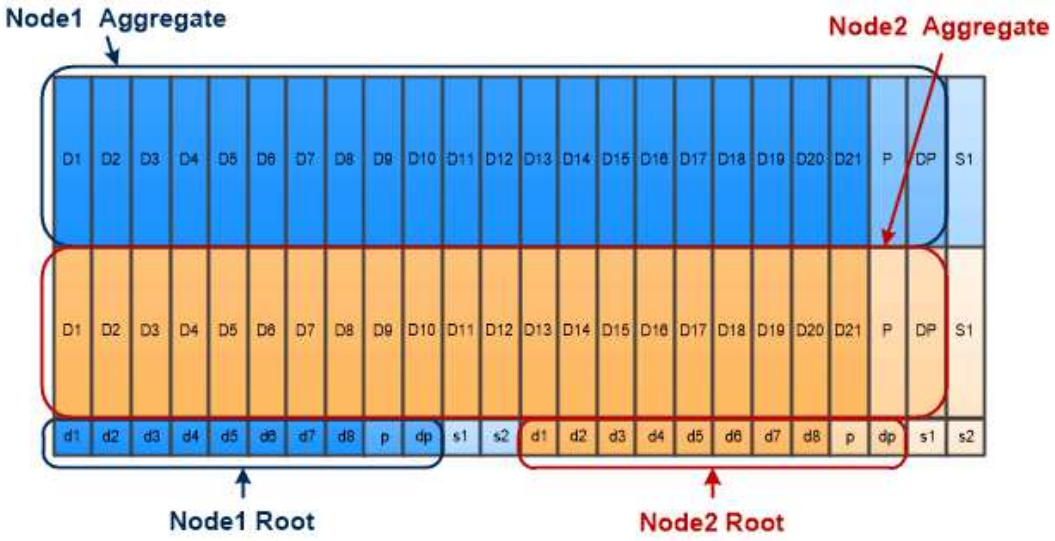

Root-data-data partitioning creates one small partition as the root partition and two larger, equally sized partitions for data.

這兩種類型的根資料分割都是ONTAP 《SUR_Advanced Drive Partitioning（ADP）》功能的一部分。這兩種資料都是在原廠設定的：適用於入門級FAS2xxx、FAS9000、FAS8200、FAS80xx和AFF 整套系統的根資料分割、僅適用於AFF 各種系統的根資料分割。

Copyright Information

Copyright © 2022 NetApp, Inc. All rights reserved. Printed in the U.S. No part of this document covered by copyright may be reproduced in any form or by any means-graphic, electronic, or mechanical, including photocopying, recording, taping, or storage in an electronic retrieval system- without prior written permission of the copyright owner.

Software derived from copyrighted NetApp material is subject to the following license and disclaimer:

THIS SOFTWARE IS PROVIDED BY NETAPP “AS IS” AND WITHOUT ANY EXPRESS OR IMPLIED WARRANTIES, INCLUDING, BUT NOT LIMITED TO, THE IMPLIED WARRANTIES OF MERCHANTABILITY AND FITNESS FOR A PARTICULAR PURPOSE, WHICH ARE HEREBY DISCLAIMED. IN NO EVENT SHALL NETAPP BE LIABLE FOR ANY DIRECT, INDIRECT, INCIDENTAL, SPECIAL, EXEMPLARY, OR CONSEQUENTIAL DAMAGES (INCLUDING, BUT NOT LIMITED TO, PROCUREMENT OF SUBSTITUTE GOODS OR SERVICES; LOSS OF USE, DATA, OR PROFITS; OR BUSINESS INTERRUPTION) HOWEVER CAUSED AND ON ANY THEORY OF LIABILITY, WHETHER IN CONTRACT, STRICT LIABILITY, OR TORT (INCLUDING NEGLIGENCE OR OTHERWISE) ARISING IN ANY WAY OUT OF THE USE OF THIS SOFTWARE, EVEN IF ADVISED OF THE POSSIBILITY OF SUCH DAMAGE.

NetApp reserves the right to change any products described herein at any time, and without notice. NetApp assumes no responsibility or liability arising from the use of products described herein, except as expressly agreed to in writing by NetApp. The use or purchase of this product does not convey a license under any patent rights, trademark rights, or any other intellectual property rights of NetApp.

The product described in this manual may be protected by one or more U.S. patents, foreign patents, or pending applications.

RESTRICTED RIGHTS LEGEND: Use, duplication, or disclosure by the government is subject to restrictions as set forth in subparagraph (c)(1)(ii) of the Rights in Technical Data and Computer Software clause at DFARS 252.277-7103 (October 1988) and FAR 52-227-19 (June 1987).

Trademark Information

NETAPP, the NETAPP logo, and the marks listed at http://www.netapp.com/TM are trademarks of NetApp, Inc. Other company and product names may be trademarks of their respective owners.