Considerations for iSCSI configurations

ONTAP 9

NetApp
March 27, 2024

This PDF was generated from https://docs.netapp.com/us-en/ontap/san-config/iscsi-config-concept.html on March 27, 2024. Always check docs.netapp.com for the latest.

Table of Contents

Considerations for iSCSI configurations . . . 1
Considerations for iSCSI configurations overview . . . 1
Ways to configure iSCSI SAN hosts with single nodes . . . 1
Ways to configure iSCSI SAN hosts with HA pairs . . . 3
Benefits of using VLANs in iSCSI configurations . . . 5

Considerations for iSCSI configurations

Considerations for iSCSI configurations overview

You should consider several things when setting up your iSCSI configuration.

- You can set up your iSCSI configuration with single nodes or with HA pairs.

  Direct connect or the use of Ethernet switches is supported for connectivity. You must create LIFs for both types of connectivity

- You should configure one management LIF for every storage virtual machine (SVM) supporting SAN.
- Selective LUN mapping (SLM) limits the paths that are being utilized in accessing the LUNs owned by an HA pair.

  This is the default behavior for LUNs created with ONTAP releases.

- HA pairs are defined as the reporting nodes for the Active/Optimized and the Active/Unoptimized paths that will be used by the host in accessing the LUNs through ALUA.
- It is recommended that all SVMs in ISCSI configurations have a minimum of two LIF's per node in separate Ethernet networks for redundancy and MPIO across multiple paths.
- You need to create one or more iSCSI paths from each node in an HA pair, using logical interfaces (LIFs) to allow access to LUNs that are serviced by the HA pair.

  If a node fails, LIFs do not migrate or assume the IP addresses of the failed partner node. Instead, the MPIO software, using ALUA on the host, is responsible for selecting the appropriate paths for LUN access through LIFs.

- VLANs offer specific benefits, such as increased security and improved network reliability that you might want to leverage in iSCSI.

Ways to configure iSCSI SAN hosts with single nodes

You can configure the iSCSI SAN hosts to connect directly to a single node or by using either one or multiple IP switches. You should determine whether you want a single-switch configuration that is not completely redundant or a multi-switch configuration that is completely redundant.

You can configure iSCSI SAN hosts in a direct-attached, single-switch, or multi-switch environment. If there are multiple hosts connecting to the node, each host can be configured with a different operating system. For single and multi-network configurations, the node can have multiple iSCSI connections to the switch, but multipathing software that supports ALUA is required.

> If there are multiple paths from the host to the controller, then ALUA must be enabled on the host.

Direct-attached single-node configurations

In direct-attached configurations, one or more hosts are directly connected to the node.

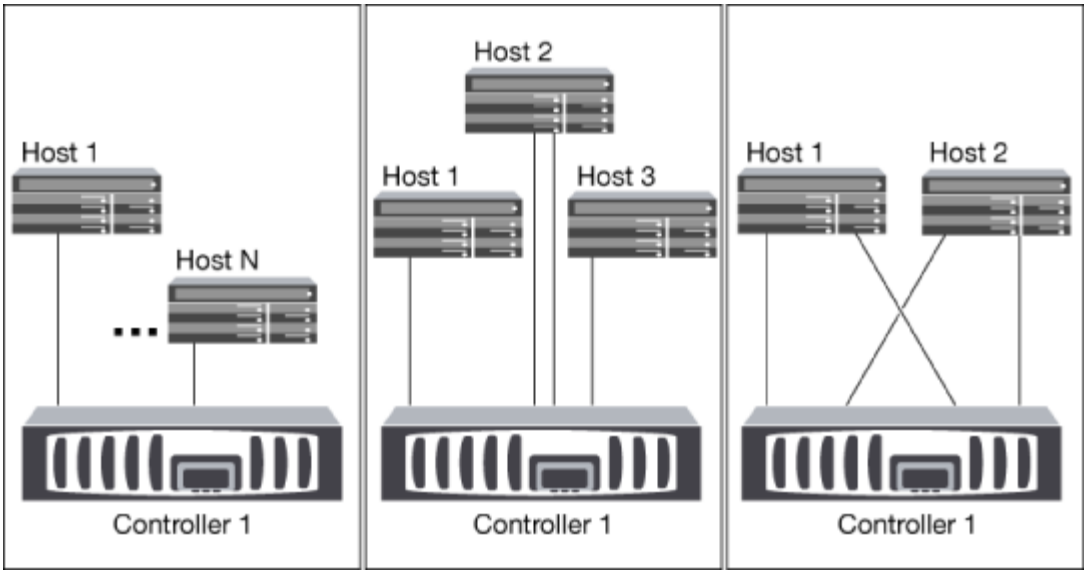

Single-network single-node configurations

In single-network single-node configurations, one switch connects a single node to one or more hosts. Because there is a single switch, this configuration is not fully redundant.

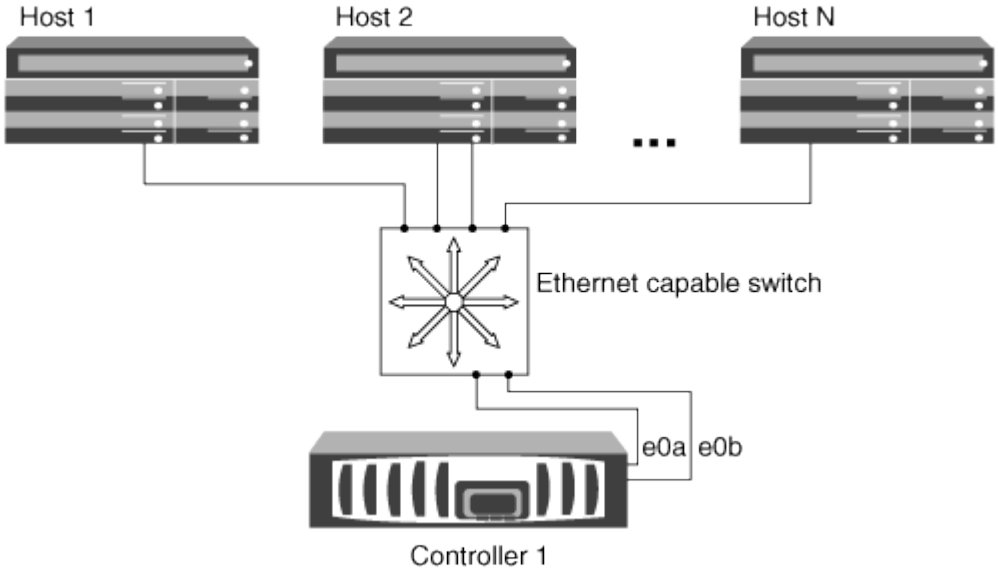

Multi-network single-node configurations

In multi-network single-node configurations, two or more switches connect a single node to one or more hosts. Because there are multiple switches, this configuration is fully redundant.

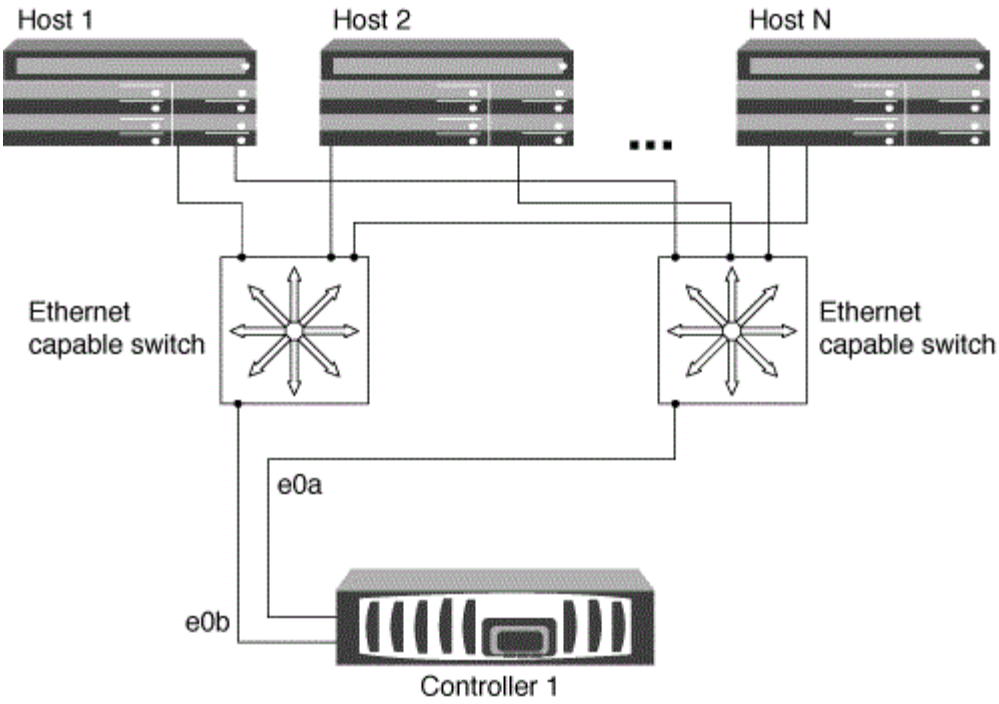

Ways to configure iSCSI SAN hosts with HA pairs

You can configure the iSCSI SAN hosts to connect to dual-node or multi-node configurations by using either one or multiple IP switches. You should determine whether you want a single-switch configuration that is not completely redundant or a multi-switch configuration that is completely redundant.

You can configure iSCSI SAN hosts with single controllers and HA pairs on direct-attached, single-network, or multi-network environments. HA pairs can have multiple iSCSI connections to each switch, but multipathing software that supports ALUA is required on each host. If there are multiple hosts, you can configure each host with a different operating system by checking the NetAppInteroperability Matrix Tool.

NetApp Interoperability Matrix Tool

Direct-attachment

In a direct-attached configuration, one or more hosts are directly connected to the controllers.

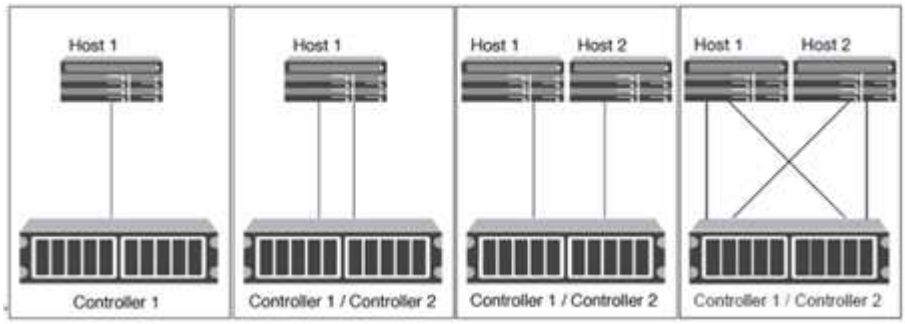

Single-network HA pairs

In single-network HA pair configurations, one switch connects the HA pair to one or more hosts. Because there is a single switch, this configuration is not fully redundant.

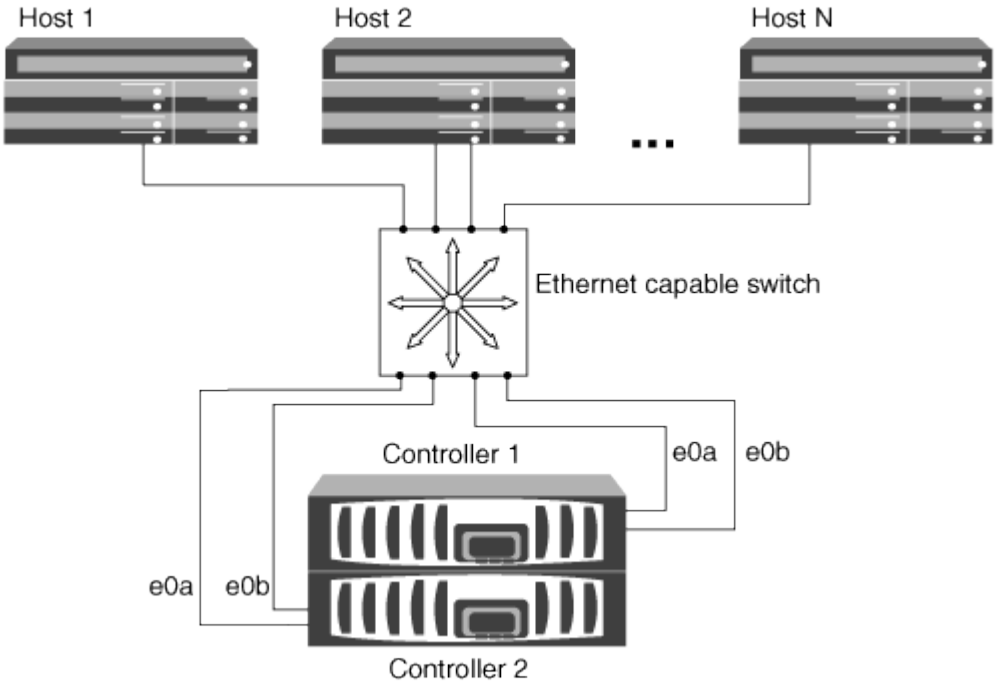

Multi-network HA pairs

In multi-network HA pair configurations, two or more switches connect the HA pair to one or more hosts. Because there are multiple switches, this configuration is fully redundant.

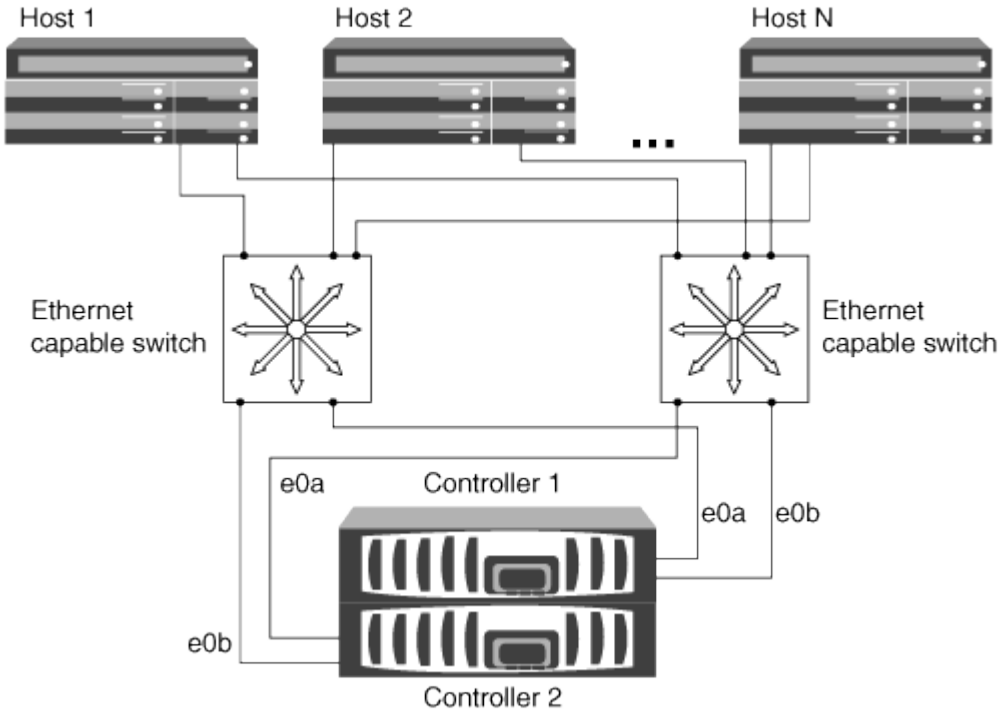

Benefits of using VLANs in iSCSI configurations

A VLAN consists of a group of switch ports grouped together into a broadcast domain. A VLAN can be on a single switch or it can span multiple switch chassis. Static and dynamic VLANs enable you to increase security, isolate problems, and limit available paths within your IP network infrastructure.

When you implement VLANs in large IP network infrastructures, you derive the following benefits:

- Increased security.

  VLANs enable you to leverage existing infrastructure while still providing enhanced security because they limit access between different nodes of an Ethernet network or an IP SAN.

- Improved Ethernet network and IP SAN reliability by isolating problems.
- Reduction of problem resolution time by limiting the problem space.
- Reduction of the number of available paths to a particular iSCSI target port.
- Reduction of the maximum number of paths used by a host.

  Having too many paths slows reconnect times. If a host does not have a multipathing solution, you can use VLANs to allow only one path.

Dynamic VLANs

Dynamic VLANs are MAC address-based. You can define a VLAN by specifying the MAC address of the members you want to include.

Dynamic VLANs provide flexibility and do not require mapping to the physical ports where the device is physically connected to the switch. You can move a cable from one port to another without reconfiguring the VLAN.

Static VLANs

Static VLANs are port-based. The switch and switch port are used to define the VLAN and its members.

Static VLANs offer improved security because it is not possible to breach VLANs using media access control (MAC) spoofing. However, if someone has physical access to the switch, replacing a cable and reconfiguring the network address can allow access.

In some environments, it is easier to create and manage static VLANs than dynamic VLANs. This is because static VLANs require only the switch and port identifier to be specified, instead of the 48-bit MAC address. In addition, you can label switch port ranges with the VLAN identifier.

Copyright information

Copyright © 2024 NetApp, Inc. All Rights Reserved. Printed in the U.S. No part of this document covered by copyright may be reproduced in any form or by any means—graphic, electronic, or mechanical, including photocopying, recording, taping, or storage in an electronic retrieval system—without prior written permission of the copyright owner.

Software derived from copyrighted NetApp material is subject to the following license and disclaimer:

THIS SOFTWARE IS PROVIDED BY NETAPP “AS IS” AND WITHOUT ANY EXPRESS OR IMPLIED WARRANTIES, INCLUDING, BUT NOT LIMITED TO, THE IMPLIED WARRANTIES OF MERCHANTABILITY AND FITNESS FOR A PARTICULAR PURPOSE, WHICH ARE HEREBY DISCLAIMED. IN NO EVENT SHALL NETAPP BE LIABLE FOR ANY DIRECT, INDIRECT, INCIDENTAL, SPECIAL, EXEMPLARY, OR CONSEQUENTIAL DAMAGES (INCLUDING, BUT NOT LIMITED TO, PROCUREMENT OF SUBSTITUTE GOODS OR SERVICES; LOSS OF USE, DATA, OR PROFITS; OR BUSINESS INTERRUPTION) HOWEVER CAUSED AND ON ANY THEORY OF LIABILITY, WHETHER IN CONTRACT, STRICT LIABILITY, OR TORT (INCLUDING NEGLIGENCE OR OTHERWISE) ARISING IN ANY WAY OUT OF THE USE OF THIS SOFTWARE, EVEN IF ADVISED OF THE POSSIBILITY OF SUCH DAMAGE.

NetApp reserves the right to change any products described herein at any time, and without notice. NetApp assumes no responsibility or liability arising from the use of products described herein, except as expressly agreed to in writing by NetApp. The use or purchase of this product does not convey a license under any patent rights, trademark rights, or any other intellectual property rights of NetApp.

The product described in this manual may be protected by one or more U.S. patents, foreign patents, or pending applications.

LIMITED RIGHTS LEGEND: Use, duplication, or disclosure by the government is subject to restrictions as set forth in subparagraph (b)(3) of the Rights in Technical Data -Noncommercial Items at DFARS 252.227-7013 (FEB 2014) and FAR 52.227-19 (DEC 2007).

Data contained herein pertains to a commercial product and/or commercial service (as defined in FAR 2.101) and is proprietary to NetApp, Inc. All NetApp technical data and computer software provided under this Agreement is commercial in nature and developed solely at private expense. The U.S. Government has a non-exclusive, non-transferrable, nonsublicensable, worldwide, limited irrevocable license to use the Data only in connection with and in support of the U.S. Government contract under which the Data was delivered. Except as provided herein, the Data may not be used, disclosed, reproduced, modified, performed, or displayed without the prior written approval of NetApp, Inc. United States Government license rights for the Department of Defense are limited to those rights identified in DFARS clause 252.227-7015(b) (FEB 2014).

Trademark information

NETAPP, the NETAPP logo, and the marks listed at http://www.netapp.com/TM are trademarks of NetApp, Inc. Other company and product names may be trademarks of their respective owners.