Disks and aggregates

ONTAP 9

NetApp
March 27, 2024

This PDF was generated from https://docs.netapp.com/us-en/ontap/concepts/disks-aggregates-concept.html on March 27, 2024. Always check docs.netapp.com for the latest.

Table of Contents

Disks and aggregates . . . 1
Local tiers (aggregates) and RAID groups . . . 1
Mirrored and unmirrored local tiers (aggregates) . . . 1
Root-data partitioning . . . 4

Disks and aggregates

Local tiers (aggregates) and RAID groups

Modern RAID technologies protect against disk failure by rebuilding a failed disk's data on a spare disk. The system compares index information on a "parity disk" with data on the remaining healthy disks to reconstruct the missing data, all without downtime or a significant performance cost.

A local tier (aggregate) consists of one or more *RAID groups*. The *RAID type* of the local tier determines the number of parity disks in the RAID group and the number of simultaneous disk failures that the RAID configuration protects against.

The default RAID type, RAID-DP (RAID-double parity), requires two parity disks per RAID group and protects against data loss in the event of two disks failing at the same time. For RAID-DP, the recommended RAID group size is between 12 and 20 HDDs and between 20 and 28 SSDs.

You can spread out the overhead cost of parity disks by creating RAID groups at the higher end of the sizing recommendation. This is especially the case for SSDs, which are much more reliable than capacity drives. For local tiers that use HDDs, you should balance the need to maximize disk storage against countervailing factors like the longer rebuild time required for larger RAID groups.

Mirrored and unmirrored local tiers (aggregates)

ONTAP has an optional feature called *SyncMirror* which you can use to synchronously mirror local tier (aggregate) data in copies, or *plexes*, stored in different RAID groups. Plexes ensure against data loss if more disks fail than the RAID type protects against, or if there is a loss of connectivity to RAID group disks.

When you create a local tier with System Manager or using the CLI, you can specify that the local tier is mirrored or unmirrored.

How unmirrored local tiers (aggregates) work

If you do not specify that the local tiers are mirrored, then they are created as unmirrored local tiers (aggregates). Unmirrored local tiers have only one *plex* (a copy of their data), which contains all of the RAID groups belonging to that local tier.

The following diagram shows an unmirrored local tier composed of disks, with its one plex. The local tier has four RAID groups: rg0, rg1, rg2, and rg3. Each RAID group has six data disks, one parity disk, and one dparity (double parity) disk. All disks used by the local tier come from the same pool, "pool0".

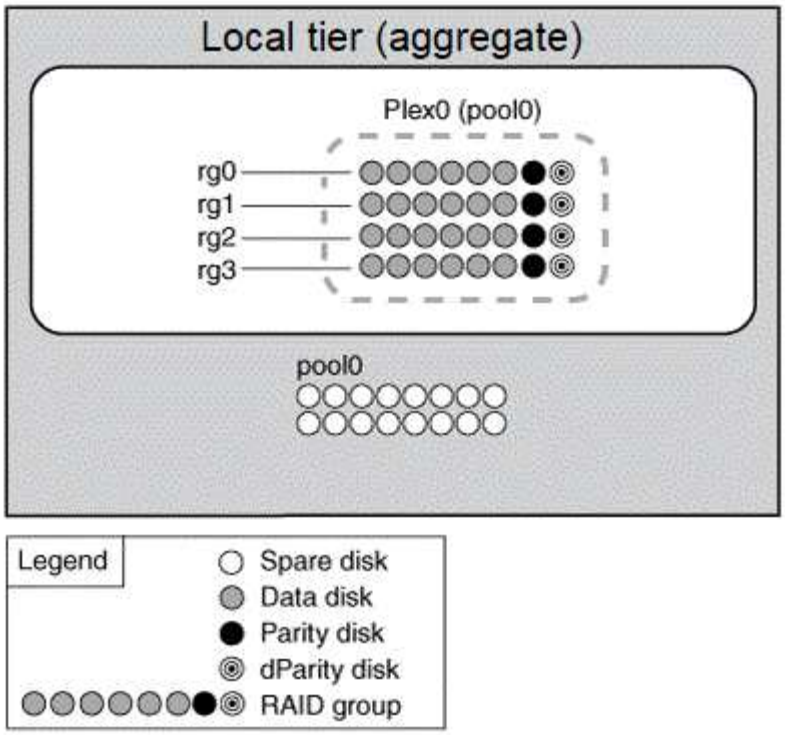

The following diagram shows an unmirrored local tier with array LUNs, with its one plex. It has two RAID groups, rg0 and rg1. All array LUNs used by the local tier come from the same pool, “pool0”.

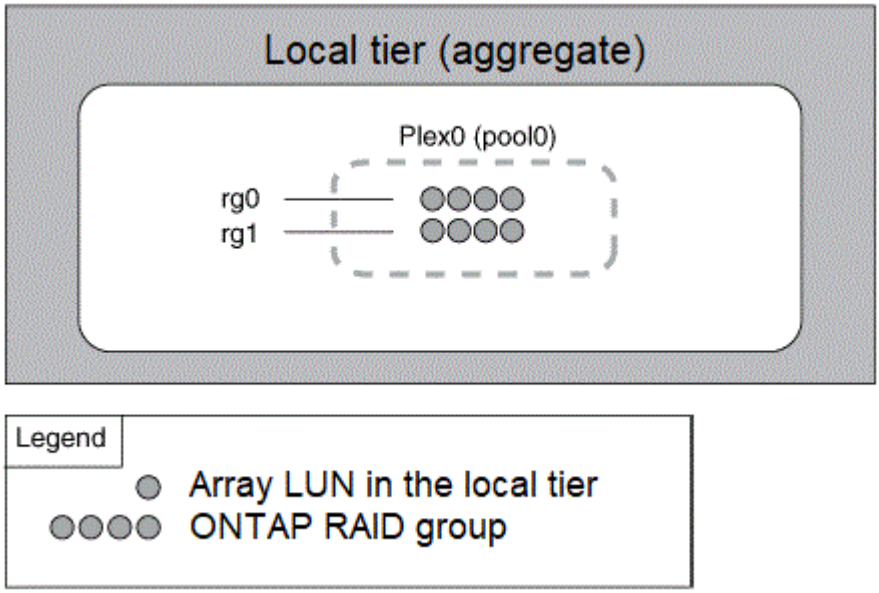

How mirrored local tiers (aggregates) work

Mirrored aggregates have two *plexes* (copies of their data), which use the SyncMirror functionality to duplicate the data to provide redundancy.

When you create a local tier, you can specify that it is a mirrored local tier. Also, you can add a second plex to an existing unmirrored local tier to make it a mirrored tier. Using SyncMirror functionality, ONTAP copies the data in the original plex (plex0) to the new plex (plex1). The plexes are physically separated (each plex has its own RAID groups and its own pool), and the plexes are updated simultaneously.

This configuration provides added protection against data loss if more disks fail than the RAID level of the aggregate protects against or if there is a loss of connectivity, because the unaffected plex continues to serve data while you fix the cause of the failure. After the plex that had a problem is fixed, the two plexes resynchronize and reestablish the mirror relationship.

The disks and array LUNs on the system are divided into two pools: “pool0” and “pool1”. Plex0 gets its storage from pool0 and plex1 gets its storage from pool1.

The following diagram shows a local tier composed of disks with the SyncMirror functionality enabled and implemented. A second plex has been created for the local tier, “plex1”. The data in plex1 is a copy of the data in plex0, and the RAID groups are also identical. The 32 spare disks are allocated to pool0 or pool1 using 16 disks for each pool.

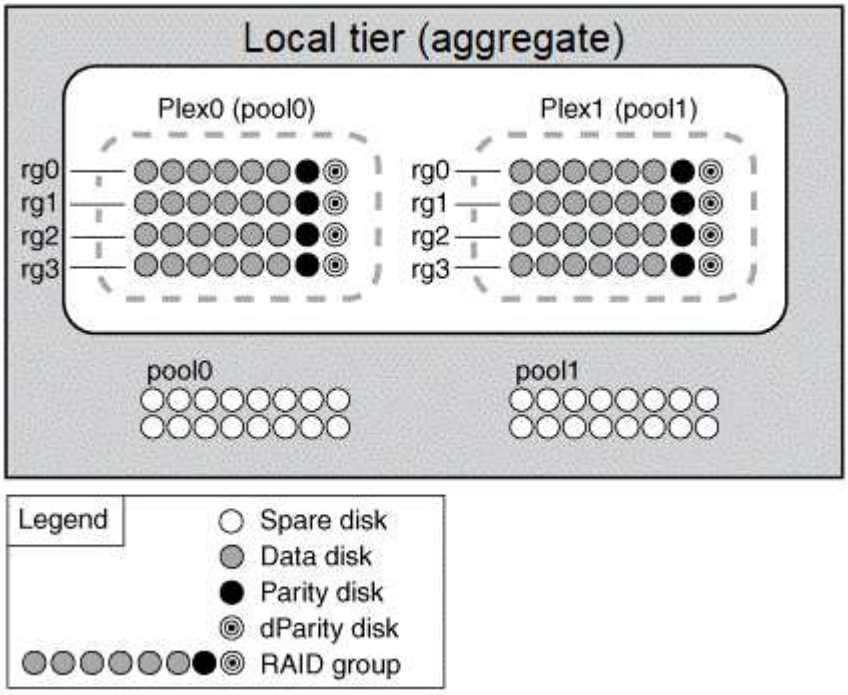

The following diagram shows an local tier composed of array LUNs with the SyncMirror functionality enabled and implemented. A second plex has been created for the local tier, “plex1”. Plex1 is a copy of plex0, and the RAID groups are also identical.

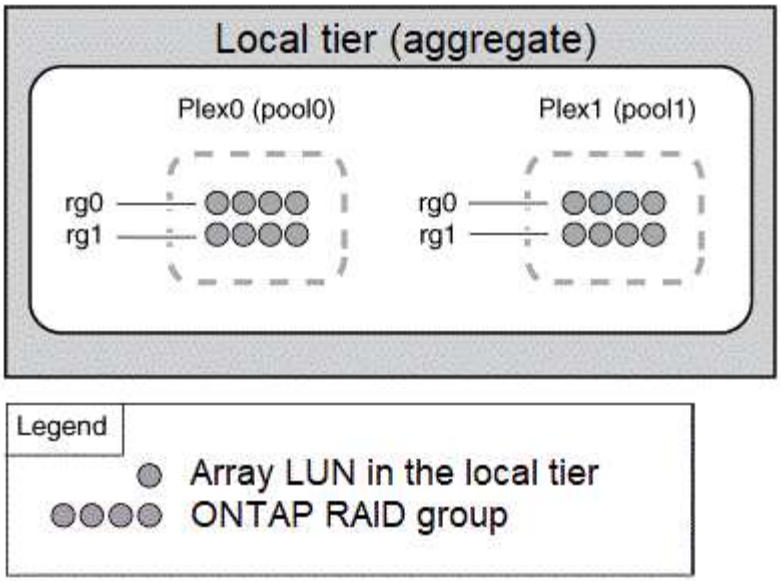

It's recommended you maintain at least 20% free space for mirrored aggregates for optimal storage performance and availability. Although the recommendation is 10% for non-mirrored aggregates, the additional 10% of space may be used by the filesystem to absorb incremental changes. Incremental changes increase space utilization for mirrored aggregates due to ONTAP's copy-on-write Snapshot-based architecture. Failure to adhere to these best practices may have a negative impact on performance.

Root-data partitioning

Every node must have a root aggregate for storage system configuration files. The root aggregate has the RAID type of the data aggregate.

System Manager does not support root-data or root-data-data partitioning.

A root aggregate of type RAID-DP typically consists of one data disk and two parity disks. That's a significant "parity tax" to pay for storage system files, when the system is already reserving two disks as parity disks for each RAID group in the aggregate.

Root-data partitioning reduces the parity tax by apportioning the root aggregate across disk partitions, reserving one small partition on each disk as the root partition and one large partition for data.

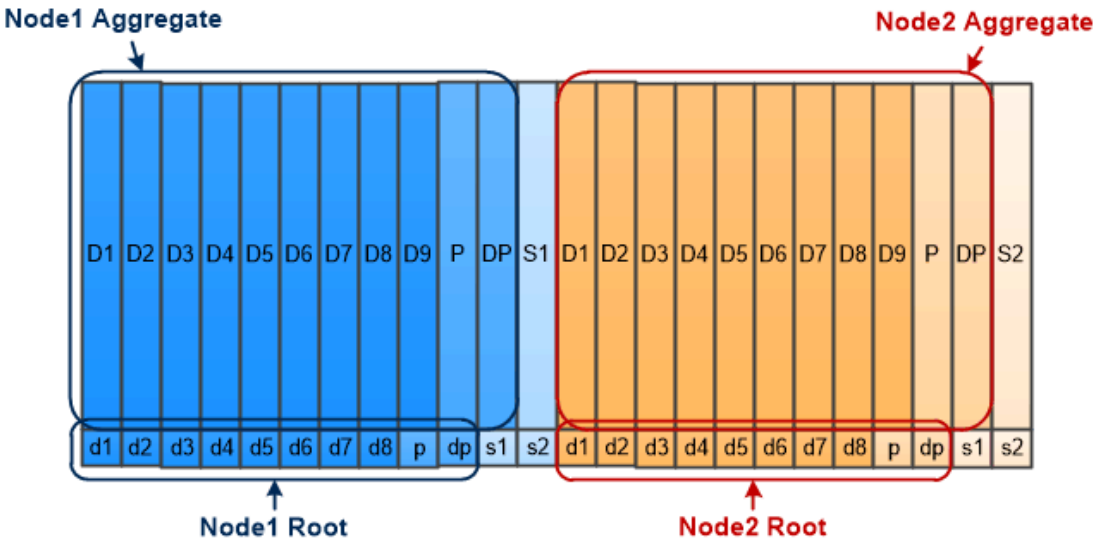

Root-data partitioning creates one small partition on each disk as the root partition and one large partition on each disk for data.

As the illustration suggests, the more disks used to store the root aggregate, the smaller the root partition. That's also the case for a form of root-data partitioning called *root-data-data partitioning*, which creates one small partition as the root partition and two larger, equally sized partitions for data.

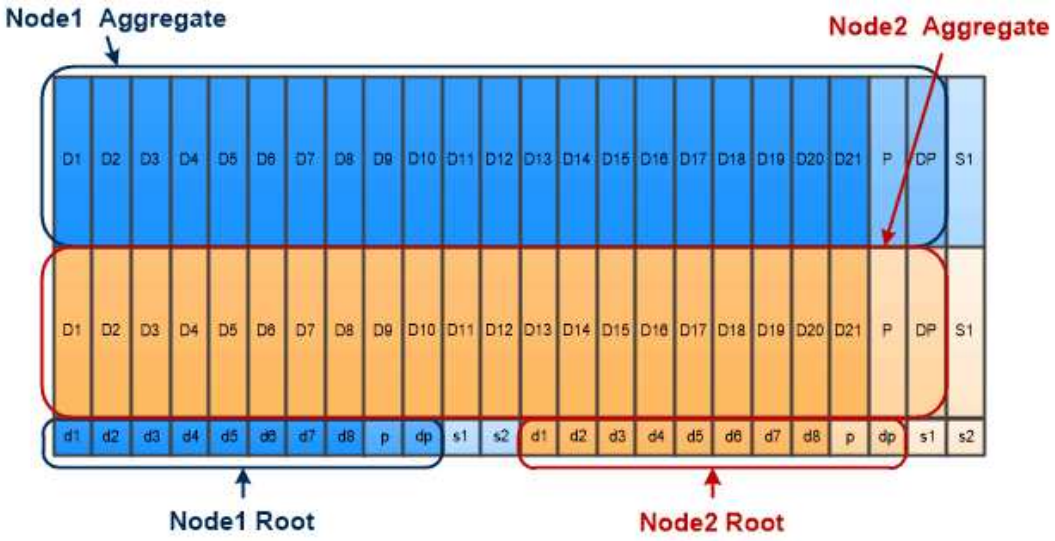

Root-data-data partitioning creates one small partition as the root partition and two larger, equally sized partitions for data.

Both types of root-data partitioning are part of the ONTAP *Advanced Drive Partitioning (ADP)* feature. Both are configured at the factory: root-data partitioning for entry-level FAS2xxx, FAS9000, FAS8200, FAS80xx and AFF systems, root-data-data partitioning for AFF systems only.

Learn more about Advanced Drive Partitioning.

Drives partitioned and used for the root aggregate

The drives that are partitioned for use in the root aggregate depend on the system configuration.

Knowing how many drives are used for the root aggregate helps you to determine how much of the drives'

capacity is reserved for the root partition, and how much is available for use in a data aggregate.

The root-data partitioning capability is supported for entry-level platforms, All Flash FAS platforms, and FAS platforms with only SSDs attached.

For entry-level platforms, only the internal drives are partitioned.

For All Flash FAS platforms and FAS platforms with only SSDs attached, all drives that are attached to the controller when the system is initialized are partitioned, up to a limit of 24 per node. Drives that are added after system configuration are not partitioned.

Copyright information

Copyright © 2024 NetApp, Inc. All Rights Reserved. Printed in the U.S. No part of this document covered by copyright may be reproduced in any form or by any means—graphic, electronic, or mechanical, including photocopying, recording, taping, or storage in an electronic retrieval system—without prior written permission of the copyright owner.

Software derived from copyrighted NetApp material is subject to the following license and disclaimer:

THIS SOFTWARE IS PROVIDED BY NETAPP “AS IS” AND WITHOUT ANY EXPRESS OR IMPLIED WARRANTIES, INCLUDING, BUT NOT LIMITED TO, THE IMPLIED WARRANTIES OF MERCHANTABILITY AND FITNESS FOR A PARTICULAR PURPOSE, WHICH ARE HEREBY DISCLAIMED. IN NO EVENT SHALL NETAPP BE LIABLE FOR ANY DIRECT, INDIRECT, INCIDENTAL, SPECIAL, EXEMPLARY, OR CONSEQUENTIAL DAMAGES (INCLUDING, BUT NOT LIMITED TO, PROCUREMENT OF SUBSTITUTE GOODS OR SERVICES; LOSS OF USE, DATA, OR PROFITS; OR BUSINESS INTERRUPTION) HOWEVER CAUSED AND ON ANY THEORY OF LIABILITY, WHETHER IN CONTRACT, STRICT LIABILITY, OR TORT (INCLUDING NEGLIGENCE OR OTHERWISE) ARISING IN ANY WAY OUT OF THE USE OF THIS SOFTWARE, EVEN IF ADVISED OF THE POSSIBILITY OF SUCH DAMAGE.

NetApp reserves the right to change any products described herein at any time, and without notice. NetApp assumes no responsibility or liability arising from the use of products described herein, except as expressly agreed to in writing by NetApp. The use or purchase of this product does not convey a license under any patent rights, trademark rights, or any other intellectual property rights of NetApp.

The product described in this manual may be protected by one or more U.S. patents, foreign patents, or pending applications.

LIMITED RIGHTS LEGEND: Use, duplication, or disclosure by the government is subject to restrictions as set forth in subparagraph (b)(3) of the Rights in Technical Data -Noncommercial Items at DFARS 252.227-7013 (FEB 2014) and FAR 52.227-19 (DEC 2007).

Data contained herein pertains to a commercial product and/or commercial service (as defined in FAR 2.101) and is proprietary to NetApp, Inc. All NetApp technical data and computer software provided under this Agreement is commercial in nature and developed solely at private expense. The U.S. Government has a non-exclusive, non-transferrable, nonsublicensable, worldwide, limited irrevocable license to use the Data only in connection with and in support of the U.S. Government contract under which the Data was delivered. Except as provided herein, the Data may not be used, disclosed, reproduced, modified, performed, or displayed without the prior written approval of NetApp, Inc. United States Government license rights for the Department of Defense are limited to those rights identified in DFARS clause 252.227-7015(b) (FEB 2014).

Trademark information

NETAPP, the NETAPP logo, and the marks listed at http://www.netapp.com/TM are trademarks of NetApp, Inc. Other company and product names may be trademarks of their respective owners.