Ways to Configure FCoE

ONTAP 9

NetApp
March 27, 2024

This PDF was generated from https://docs.netapp.com/us-en/ontap/san-config/configure-fcoe-reference.html on March 27, 2024. Always check docs.netapp.com for the latest.

Table of Contents

Ways to Configure FCoE 1
Ways to Configure FCoE overview 1
FCoE initiator and target combinations 5
FCoE supported hop count 6

Ways to Configure FCoE

Ways to Configure FCoE overview

FCoE can be configured in various ways using FCoE switches. Direct-attached configurations are not supported in FCoE.

All FCoE configurations are dual-fabric, fully redundant, and require host-side multipathing software. In all FCoE configurations, you can have multiple FCoE and FC switches in the path between the initiator and target, up to the maximum hop count limit. To connect switches to each other, the switches must run a firmware version that supports Ethernet ISLs. Each host in any FCoE configuration can be configured with a different operating system.

FCoE configurations require Ethernet switches that explicitly support FCoE features. FCoE configurations are validated through the same interoperability and quality assurance process as FC switches. Supported configurations are listed in the Interoperability Matrix. Some of the parameters included in these supported configurations are the switch model, the number of switches that can be deployed in a single fabric, and the supported switch firmware version.

The FC target expansion adapter port numbers in the illustrations are examples. The actual port numbers might vary, depending on the expansion slots in which the FCoE target expansion adapters are installed.

FCoE initiator to FC target

Using FCoE initiators (CNAs), you can connect hosts to both controllers in an HA pair through FCoE switches to FC target ports. The FCoE switch must also have FC ports. The host FCoE initiator always connects to the FCoE switch. The FCoE switch can connect directly to the FC target or can connect to the FC target through FC switches.

The following illustration shows host CNAs connecting to an FCoE switch, and then to an FC switch before connecting to the HA pair:

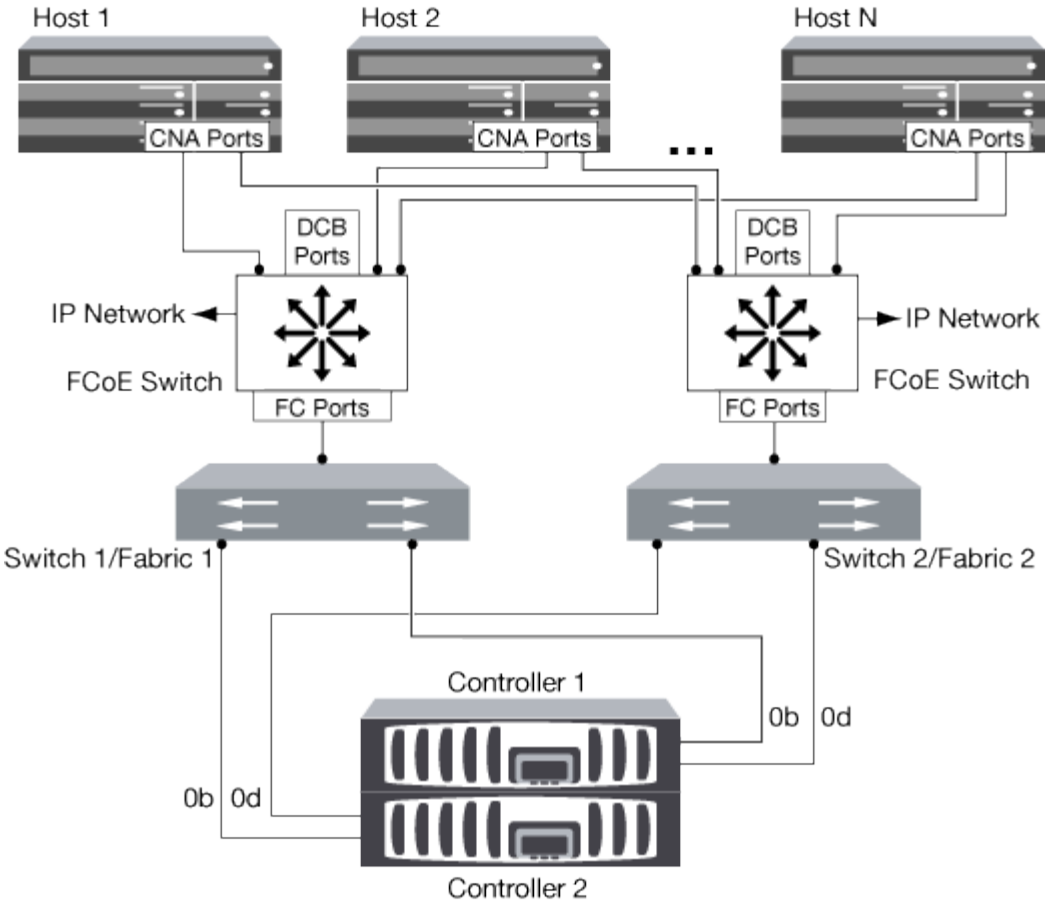

FCoE initiator to FCoE target

Using host FCoE initiators (CNAs), you can connect hosts to both controllers in an HA pair to FCoE target ports (also called UTAs or UTA2s) through FCoE switches.

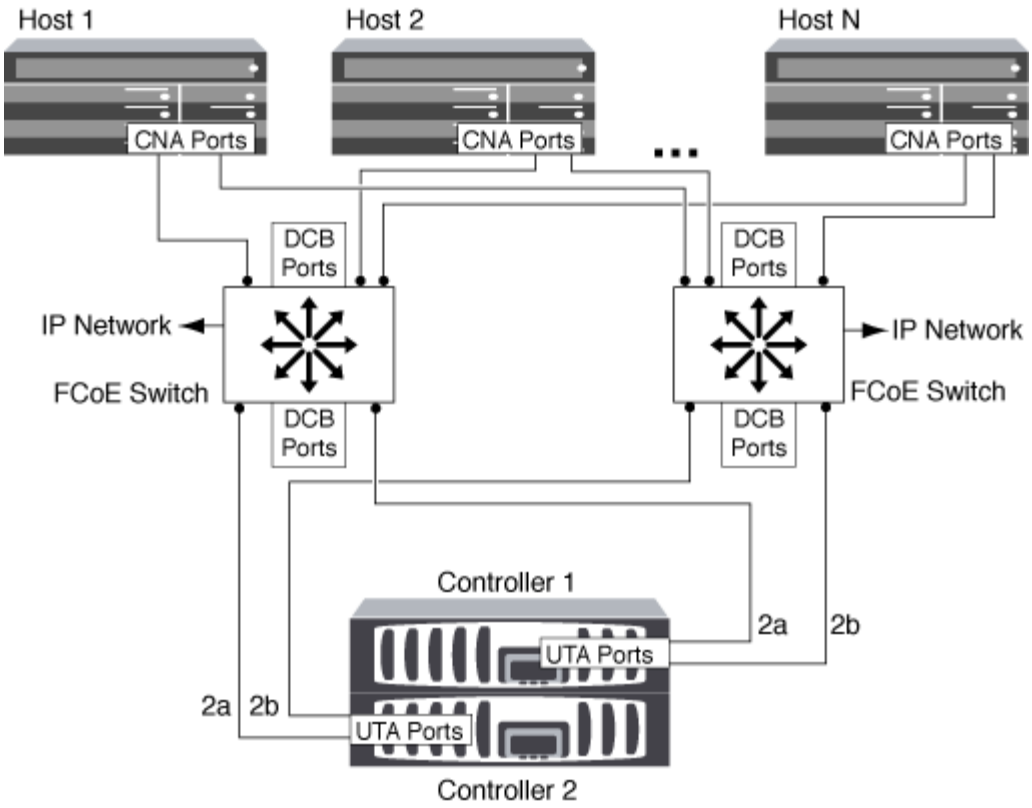

FCoE initiator to FCoE and FC targets

Using host FCoE initiators (CNAs), you can connect hosts to both controllers in an HA pair to FCoE and FC target ports (also called UTAs or UTA2s) through FCoE switches.

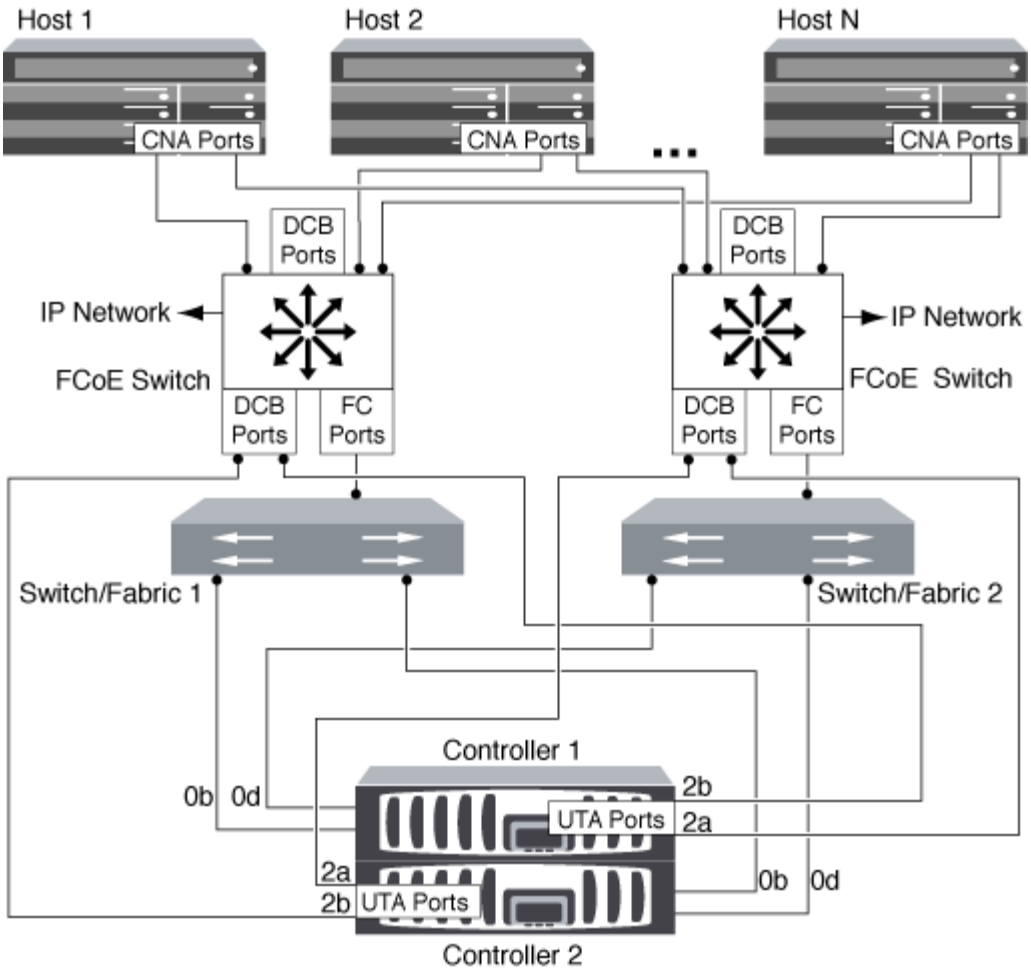

FCoE mixed with IP storage protocols

Using host FCoE initiators (CNAs), you can connect hosts to both controllers in an HA pair to FCoE target ports (also called UTAs or UTA2s) through FCoE switches. FCoE ports cannot use traditional link aggregation to a single switch. Cisco switches support a special type of link aggregation (Virtual Port Channel) that does support FCoE. A Virtual Port Channel aggregates individual links to two switches. You can also use Virtual Port Channels for other Ethernet traffic. Ports used for traffic other than FCoE, including NFS, SMB, iSCSI, and other Ethernet traffic, can use regular Ethernet ports on the FCoE switches.

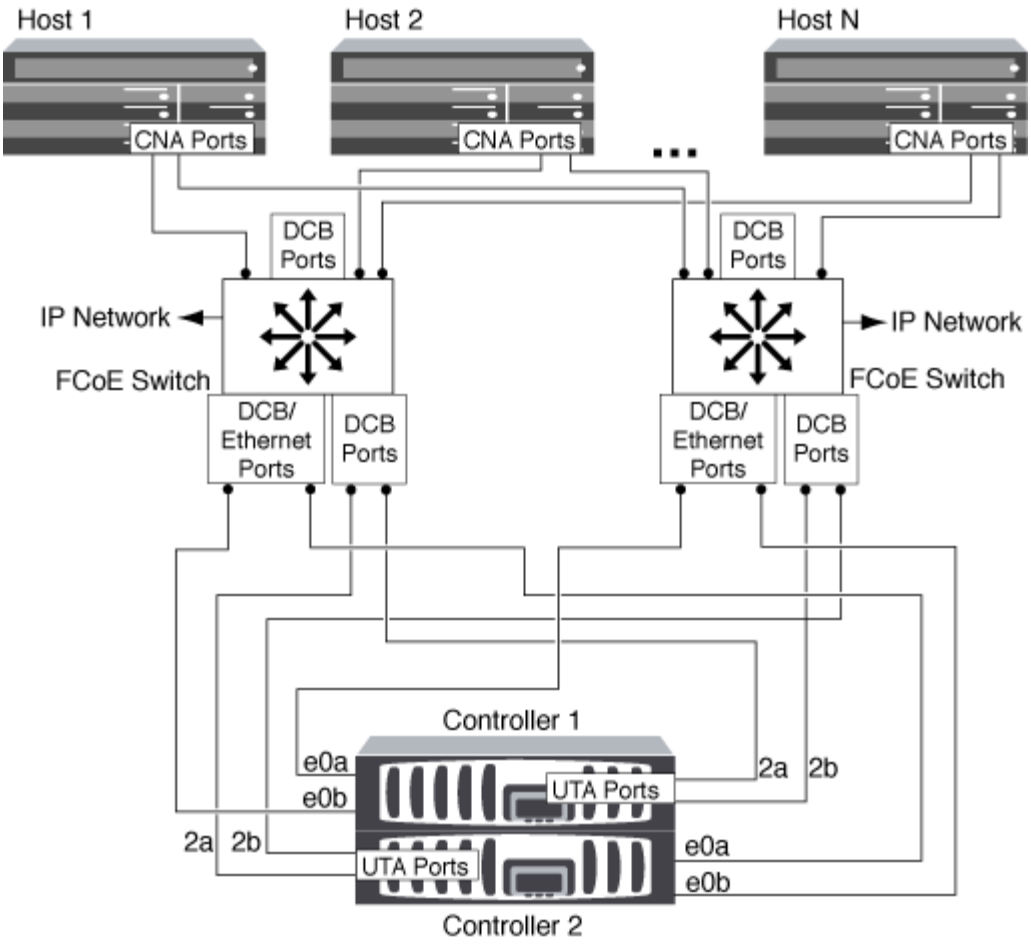

FCoE initiator and target combinations

Certain combinations of FCoE and traditional FC initiators and targets are supported.

FCoE initiators

You can use FCoE initiators in host computers with both FCoE and traditional FC targets in storage controllers. The host FCoE initiator must connect to an FCoE DCB (data center bridging) switch; direct connection to a target is not supported.

The following table lists the supported combinations:

Initiator	Target	Supported?
FC	FC	Yes
FC	FCoE	Yes
FCoE	FC	Yes
FCoE	FCoE	Yes

FCoE targets

You can mix FCoE target ports with 4-Gb, 8-Gb, or 16-Gb FC ports on the storage controller regardless of whether the FC ports are add-in target adapters or onboard ports. You can have both FCoE and FC target adapters in the same storage controller.

The rules for combining onboard and expansion FC ports still apply.

FCoE supported hop count

The maximum supported Fibre Channel over Ethernet (FCoE) hop count between a host and storage system depends on the switch supplier and storage system support for FCoE configurations.

The hop count is defined as the number of switches in the path between the initiator (host) and target (storage system). Documentation from Cisco Systems also refers to this value as the *diameter of the SAN fabric*.

For FCoE, you can have FCoE switches connected to FC switches.

For end-to-end FCoE connections, the FCoE switches must be running a firmware version that supports Ethernet inter-switch links (ISLs).

The following table lists the maximum supported hop counts:

Switch supplier	Supported hop count
Brocade	7 for FC 5 for FCoE
Cisco	7 Up to 3 of the switches can be FCoE switches.

Copyright information

Copyright © 2024 NetApp, Inc. All Rights Reserved. Printed in the U.S. No part of this document covered by copyright may be reproduced in any form or by any means—graphic, electronic, or mechanical, including photocopying, recording, taping, or storage in an electronic retrieval system—without prior written permission of the copyright owner.

Software derived from copyrighted NetApp material is subject to the following license and disclaimer:

THIS SOFTWARE IS PROVIDED BY NETAPP “AS IS” AND WITHOUT ANY EXPRESS OR IMPLIED WARRANTIES, INCLUDING, BUT NOT LIMITED TO, THE IMPLIED WARRANTIES OF MERCHANTABILITY AND FITNESS FOR A PARTICULAR PURPOSE, WHICH ARE HEREBY DISCLAIMED. IN NO EVENT SHALL NETAPP BE LIABLE FOR ANY DIRECT, INDIRECT, INCIDENTAL, SPECIAL, EXEMPLARY, OR CONSEQUENTIAL DAMAGES (INCLUDING, BUT NOT LIMITED TO, PROCUREMENT OF SUBSTITUTE GOODS OR SERVICES; LOSS OF USE, DATA, OR PROFITS; OR BUSINESS INTERRUPTION) HOWEVER CAUSED AND ON ANY THEORY OF LIABILITY, WHETHER IN CONTRACT, STRICT LIABILITY, OR TORT (INCLUDING NEGLIGENCE OR OTHERWISE) ARISING IN ANY WAY OUT OF THE USE OF THIS SOFTWARE, EVEN IF ADVISED OF THE POSSIBILITY OF SUCH DAMAGE.

NetApp reserves the right to change any products described herein at any time, and without notice. NetApp assumes no responsibility or liability arising from the use of products described herein, except as expressly agreed to in writing by NetApp. The use or purchase of this product does not convey a license under any patent rights, trademark rights, or any other intellectual property rights of NetApp.

The product described in this manual may be protected by one or more U.S. patents, foreign patents, or pending applications.

LIMITED RIGHTS LEGEND: Use, duplication, or disclosure by the government is subject to restrictions as set forth in subparagraph (b)(3) of the Rights in Technical Data -Noncommercial Items at DFARS 252.227-7013 (FEB 2014) and FAR 52.227-19 (DEC 2007).

Data contained herein pertains to a commercial product and/or commercial service (as defined in FAR 2.101) and is proprietary to NetApp, Inc. All NetApp technical data and computer software provided under this Agreement is commercial in nature and developed solely at private expense. The U.S. Government has a non-exclusive, non-transferrable, nonsublicensable, worldwide, limited irrevocable license to use the Data only in connection with and in support of the U.S. Government contract under which the Data was delivered. Except as provided herein, the Data may not be used, disclosed, reproduced, modified, performed, or displayed without the prior written approval of NetApp, Inc. United States Government license rights for the Department of Defense are limited to those rights identified in DFARS clause 252.227-7015(b) (FEB 2014).

Trademark information

NETAPP, the NETAPP logo, and the marks listed at http://www.netapp.com/TM are trademarks of NetApp, Inc. Other company and product names may be trademarks of their respective owners.