Configuring the host network

StorageGRID 11.5

NetApp
February 20, 2024

This PDF was generated from https://docs.netapp.com/us-en/storagegrid-115/ubuntu/considerations-and-recommendations-for-mac-address-cloning.html on February 20, 2024. Always check docs.netapp.com for the latest.

Table of Contents

Configuring the host network . . . 1
Considerations and recommendations for MAC address cloning . . . 2
Example 1: 1-to-1 mapping to physical or virtual NICs . . . 3
Example 2: LACP bond carrying VLANs . . . 4

Configuring the host network

After completing the Linux installation on your hosts, you might need to perform some additional configuration to prepare a set of network interfaces on each host that are suitable for mapping into the StorageGRID nodes you will deploy later.

What you'll need

- You have reviewed the StorageGRID networking guidelines.

  Network guidelines

- You have reviewed the information about node container migration requirements.

  Node container migration requirements

- If you are using virtual hosts, you have read the considerations and recommendations for MAC address cloning before configuring the host network.

  Considerations and recommendations for MAC address cloning

> If you are using VMs as hosts, you should select VMXNET 3 as the virtual network adapter. The VMware E1000 network adapter has caused connectivity issues with StorageGRID containers deployed on certain distributions of Linux.

About this task

Grid nodes must be able to access the Grid Network and, optionally, the Admin and Client Networks. You provide this access by creating mappings that associate the host's physical interface to the virtual interfaces for each grid node. When creating host interfaces, use friendly names to facilitate deployment across all hosts, and to enable migration.

The same interface can be shared between the host and one or more nodes. For example, you might use the same interface for host access and node Admin Network access, to facilitate host and node maintenance. Although the same interface can be shared between the host and individual nodes, all must have different IP addresses. IP addresses cannot be shared between nodes or between the host and any node.

You can use the same host network interface to provide the Grid Network interface for all StorageGRID nodes on the host; you can use a different host network interface for each node; or you can do something in between. However, you would not typically provide the same host network interface as both the Grid and Admin Network interfaces for a single node, or as the Grid Network interface for one node and the Client Network interface for another.

You can complete this task in many ways. For example, if your hosts are virtual machines and you are deploying one or two StorageGRID nodes for each host, you can simply create the correct number of network interfaces in the hypervisor, and use a 1-to-1 mapping. If you are deploying multiple nodes on bare metal hosts for production use, you can leverage the Linux networking stack's support for VLAN and LACP for fault tolerance and bandwidth sharing. The following sections provide detailed approaches for both of these examples. You do not need to use either of these examples; you can use any approach that meets your needs.

> Do not use bond or bridge devices directly as the container network interface. Doing so could prevent node start-up caused by a kernel issue with the use of MACVLAN with bond and bridge devices in the container namespace. Instead, use a non-bond device, such as a VLAN or virtual Ethernet (veth) pair. Specify this device as the network interface in the node configuration file.

Considerations and recommendations for MAC address cloning

MAC address cloning causes the Docker container to use the MAC address of the host, and the host to use the MAC address of either an address you specify or a randomly generated one. You should use MAC address cloning to avoid the use of promiscuous mode network configurations.

Enabling MAC cloning

In certain environments, security can be enhanced through MAC address cloning because it enables you to use a dedicated virtual NIC for the Admin Network, Grid Network, and Client Network. Having the Docker container use the MAC address of the dedicated NIC on the host allows you to avoid using promiscuous mode network configurations.

> MAC address cloning is intended to be used with virtual server installations and might not function properly with all physical appliance configurations.

> If a node fails to start due to a MAC cloning targeted interface being busy, you might need to set the link to "down" before starting node. Additionally, it is possible that the virtual environment might prevent MAC cloning on a network interface while the link is up. If a node fails to set the MAC address and start due to an interface being busy, setting the link to "down" before starting the node might fix the issue.

MAC address cloning is disabled by default and must be set by node configuration keys. You should enable it when you install StorageGRID.

There is one key for each network:

- `ADMIN_NETWORK_TARGET_TYPE_INTERFACE_CLONE_MAC`
- `GRID_NETWORK_TARGET_TYPE_INTERFACE_CLONE_MAC`
- `CLIENT_NETWORK_TARGET_TYPE_INTERFACE_CLONE_MAC`

Setting the key to "true" causes the Docker container to use the MAC address of the host's NIC. Additionally, the host will then use the MAC address of the specified container network. By default, the container address is a randomly generated address, but if you have set one using the `_NETWORK_MAC` node configuration key, that address is used instead. The host and container will always have different MAC addresses.

> Enabling MAC cloning on a virtual host without also enabling promiscuous mode on the hypervisor might cause Linux host networking using the host's interface to stop working.

MAC cloning use cases

There are two use cases to consider with MAC cloning:

- MAC cloning not enabled: When the `_CLONE_MAC` key in the node configuration file is not set, or set to "false," the host will use the host NIC MAC and the container will have a StorageGRID-generated MAC unless a MAC is specified in the `_NETWORK_MAC` key. If an address is set in the `_NETWORK_MAC` key, the container will have the address specified in the `_NETWORK_MAC` key. This configuration of keys requires the

use of promiscuous mode.

- MAC cloning enabled: When the `_CLONE_MAC` key in the node configuration file is set to "true," the container uses the host NIC MAC, and the host uses a StorageGRID-generated MAC unless a MAC is specified in the `_NETWORK_MAC` key. If an address is set in the `_NETWORK_MAC` key, the host uses the specified address instead of a generated one. In this configuration of keys, you should not use promiscuous mode.

> If you do not want to use MAC address cloning and would rather allow all interfaces to receive and transmit data for MAC addresses other than the ones assigned by the hypervisor, ensure that the security properties at the virtual switch and port group levels are set to **Accept** for Promiscuous Mode, MAC Address Changes, and Forged Transmits. The values set on the virtual switch can be overridden by the values at the port group level, so ensure that settings are the same in both places.

To enable MAC cloning, see the instructions for creating node configuration files.

Creating node configuration files

MAC cloning example

Example of MAC cloning enabled with a host having MAC address of 11:22:33:44:55:66 for the interface ens256 and the following keys in the node configuration file:

- `ADMIN_NETWORK_TARGET = ens256`
- `ADMIN_NETWORK_MAC = b2:9c:02:c2:27:10`
- `ADMIN_NETWORK_TARGET_TYPE_INTERFACE_CLONE_MAC = true`

Result: the host MAC for ens256 is b2:9c:02:c2:27:10 and the Admin Network MAC is 11:22:33:44:55:66

Example 1: 1-to-1 mapping to physical or virtual NICs

Example 1 describes a simple physical interface mapping that requires little or no host-side configuration.

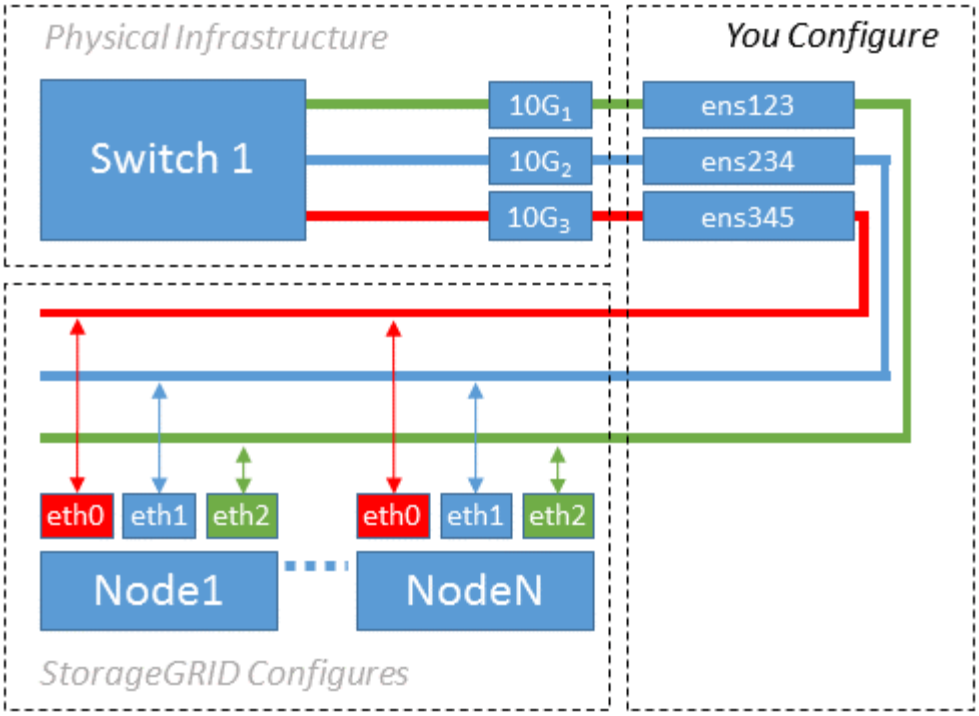

The Linux operating system creates the ensXYZ interfaces automatically during installation or boot, or when the interfaces are hot-added. No configuration is required other than ensuring that the interfaces are set to come up automatically after boot. You do have to determine which ensXYZ corresponds to which StorageGRID network (Grid, Admin, or Client) so you can provide the correct mappings later in the configuration process.

Note that the figure show multiple StorageGRID nodes; however, you would normally use this configuration for single-node VMs.

If Switch 1 is a physical switch, you should configure the ports connected to interfaces $10G_1$ through $10G_3$ for access mode, and place them on the appropriate VLANs.

Example 2: LACP bond carrying VLANs

Example 2 assumes you are familiar with bonding network interfaces and with creating VLAN interfaces on the Linux distribution you are using.

About this task

Example 2 describes a generic, flexible, VLAN-based scheme that facilitates the sharing of all available network bandwidth across all nodes on a single host. This example is particularly applicable to bare metal hosts.

To understand this example, suppose you have three separate subnets for the Grid, Admin, and Client Networks at each data center. The subnets are on separate VLANs (1001, 1002, and 1003) and are presented to the host on a LACP-bonded trunk port (bond0). You would configure three VLAN interfaces on the bond: bond0.1001, bond0.1002, and bond0.1003.

If you require separate VLANs and subnets for node networks on the same host, you can add VLAN interfaces on the bond and map them into the host (shown as bond0.1004 in the illustration).

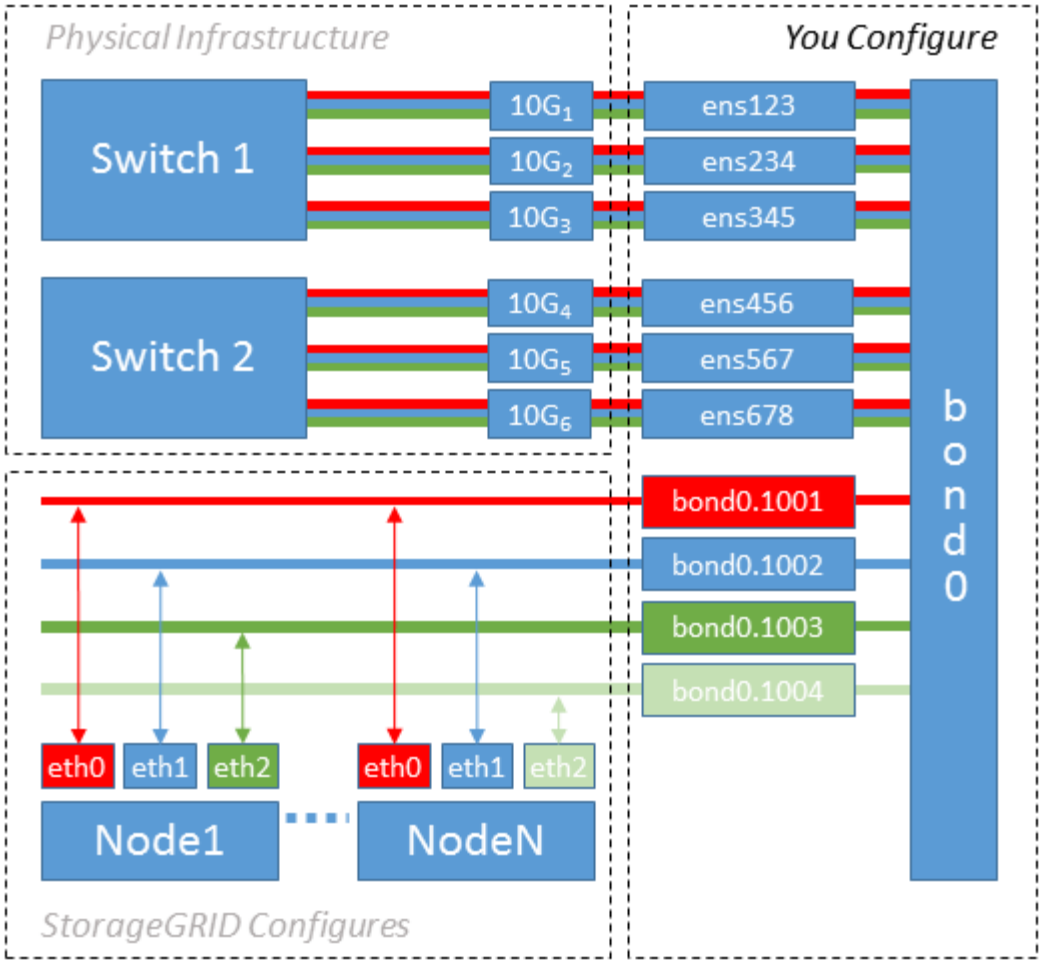

Steps

1. Aggregate all physical network interfaces that will be used for StorageGRID network connectivity into a single LACP bond.

   Use the same name for the bond on every host, for example, bond0.

2. Create VLAN interfaces that use this bond as their associated “physical device,” using the standard VLAN interface naming convention `physdev-name.VLAN ID`.

   Note that steps 1 and 2 require appropriate configuration on the edge switches terminating the other ends of the network links. The edge switch ports must also be aggregated into a LACP port channel, configured as a trunk, and allowed to pass all required VLANs.

   Sample interface configuration files for this per-host networking configuration scheme are provided.

Related information

Example /etc/network/interfaces

Copyright information

Copyright © 2024 NetApp, Inc. All Rights Reserved. Printed in the U.S. No part of this document covered by copyright may be reproduced in any form or by any means—graphic, electronic, or mechanical, including photocopying, recording, taping, or storage in an electronic retrieval system—without prior written permission of the copyright owner.

Software derived from copyrighted NetApp material is subject to the following license and disclaimer:

THIS SOFTWARE IS PROVIDED BY NETAPP “AS IS” AND WITHOUT ANY EXPRESS OR IMPLIED WARRANTIES, INCLUDING, BUT NOT LIMITED TO, THE IMPLIED WARRANTIES OF MERCHANTABILITY AND FITNESS FOR A PARTICULAR PURPOSE, WHICH ARE HEREBY DISCLAIMED. IN NO EVENT SHALL NETAPP BE LIABLE FOR ANY DIRECT, INDIRECT, INCIDENTAL, SPECIAL, EXEMPLARY, OR CONSEQUENTIAL DAMAGES (INCLUDING, BUT NOT LIMITED TO, PROCUREMENT OF SUBSTITUTE GOODS OR SERVICES; LOSS OF USE, DATA, OR PROFITS; OR BUSINESS INTERRUPTION) HOWEVER CAUSED AND ON ANY THEORY OF LIABILITY, WHETHER IN CONTRACT, STRICT LIABILITY, OR TORT (INCLUDING NEGLIGENCE OR OTHERWISE) ARISING IN ANY WAY OUT OF THE USE OF THIS SOFTWARE, EVEN IF ADVISED OF THE POSSIBILITY OF SUCH DAMAGE.

NetApp reserves the right to change any products described herein at any time, and without notice. NetApp assumes no responsibility or liability arising from the use of products described herein, except as expressly agreed to in writing by NetApp. The use or purchase of this product does not convey a license under any patent rights, trademark rights, or any other intellectual property rights of NetApp.

The product described in this manual may be protected by one or more U.S. patents, foreign patents, or pending applications.

LIMITED RIGHTS LEGEND: Use, duplication, or disclosure by the government is subject to restrictions as set forth in subparagraph (b)(3) of the Rights in Technical Data -Noncommercial Items at DFARS 252.227-7013 (FEB 2014) and FAR 52.227-19 (DEC 2007).

Data contained herein pertains to a commercial product and/or commercial service (as defined in FAR 2.101) and is proprietary to NetApp, Inc. All NetApp technical data and computer software provided under this Agreement is commercial in nature and developed solely at private expense. The U.S. Government has a non-exclusive, non-transferrable, nonsublicensable, worldwide, limited irrevocable license to use the Data only in connection with and in support of the U.S. Government contract under which the Data was delivered. Except as provided herein, the Data may not be used, disclosed, reproduced, modified, performed, or displayed without the prior written approval of NetApp, Inc. United States Government license rights for the Department of Defense are limited to those rights identified in DFARS clause 252.227-7015(b) (FEB 2014).

Trademark information

NETAPP, the NETAPP logo, and the marks listed at http://www.netapp.com/TM are trademarks of NetApp, Inc. Other company and product names may be trademarks of their respective owners.