Installing the hardware

StorageGRID 11.5

NetApp
February 20, 2024

This PDF was generated from https://docs.netapp.com/us-en/storagegrid-115/sg100-1000/registering-hardware-sg100-and-sg1000.html on February 20, 2024. Always check docs.netapp.com for the latest.

Table of Contents

Installing the hardware . . . 1
Registering the hardware . . . 1
Installing the appliance into a cabinet or rack (SG100 and SG1000) . . . 2
Cabling the appliance SG100 and SG1000 . . . 3
Connecting power cords and applying power (SG100 and SG1000) . . . 6
Viewing status indicators on the SG100 and SG1000 appliances . . . 6

Installing the hardware

Hardware installation entails installing the appliance into a cabinet or rack, connecting the cables, and applying power.

Steps

- Registering the hardware
- Installing the appliance into a cabinet or rack (SG100 and SG1000)
- Cabling the appliance SG100 and SG1000)
- Connecting power cords and applying power (SG100 and SG1000)
- Viewing status indicators on the SG100 and SG1000 appliances

Registering the hardware

Registering the appliance hardware provides support benefits.

Steps

1. Locate the chassis serial number for the appliance.

   You can find the number on the packing slip, in your confirmation email, or on the appliance after you unpack it.

2. Go to the NetApp Support Site at mysupport.netapp.com.
3. Determine whether you need to register the hardware:

If you are a…	Follow these steps…
Existing NetApp customer	a. Sign in with your username and password. b. Select **Products** > **My Products**. c. Confirm that the new serial number is listed. d. If it is not, follow the instructions for new NetApp customers.
New NetApp customer	a. Click **Register Now**, and create an account. b. Select **Products** > **Register Products**. c. Enter the product serial number and requested details. After your registration is approved, you can download any required software. The approval process might take up to 24 hours.

Installing the appliance into a cabinet or rack (SG100 and SG1000)

You must install a set of rails for the appliance in your cabinet or rack, and then slide the appliance onto the rails.

What you'll need

- You have reviewed the Safety Notices document included in the box, and understand the precautions for moving and installing hardware.
- You have the instructions packaged with the rail kit.

Steps

1. Carefully follow the instructions for the rail kit to install the rails in your cabinet or rack.
2. On the two rails installed in the cabinet or rack, extend the movable parts of the rails until you hear a click.

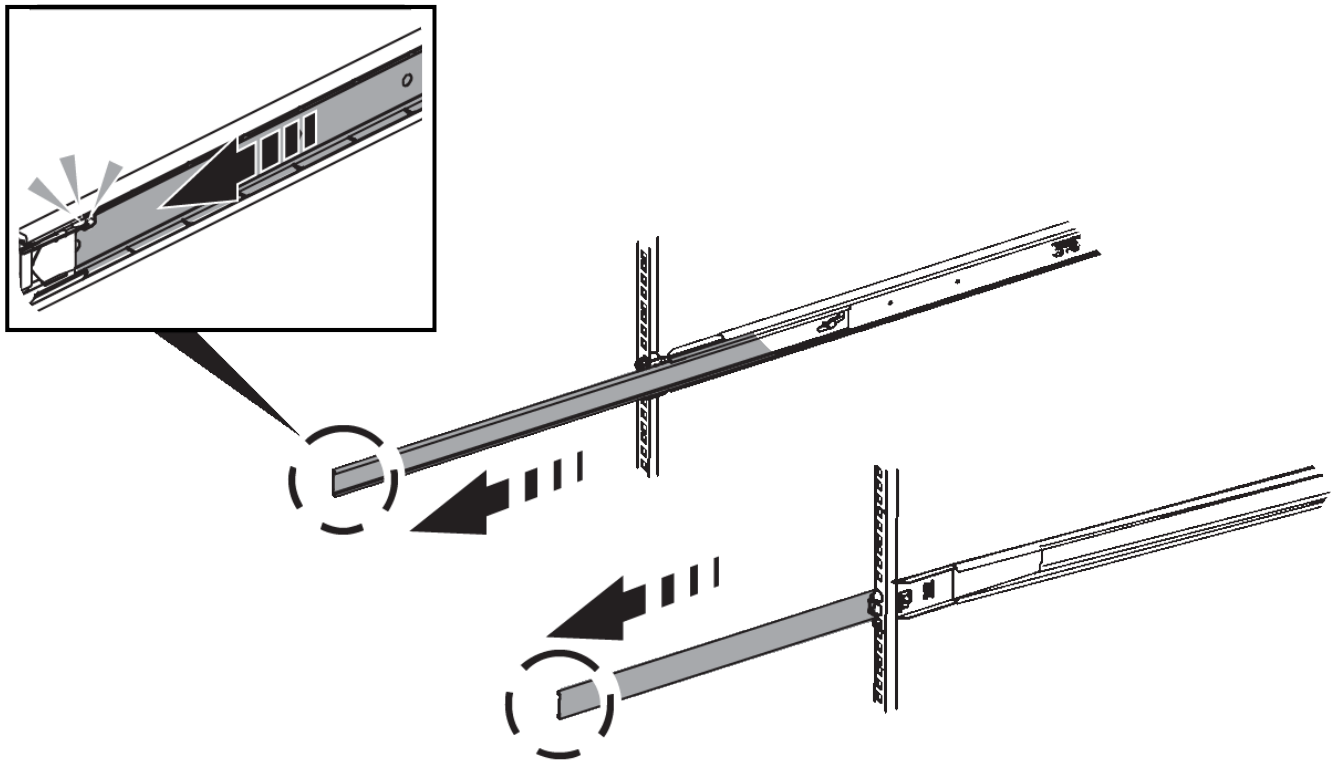

3. Insert the appliance into the rails.
4. Slide the appliance into the cabinet or rack.

   When you cannot move the appliance any further, pull the blue latches on both sides of the chassis to slide the appliance all the way in.

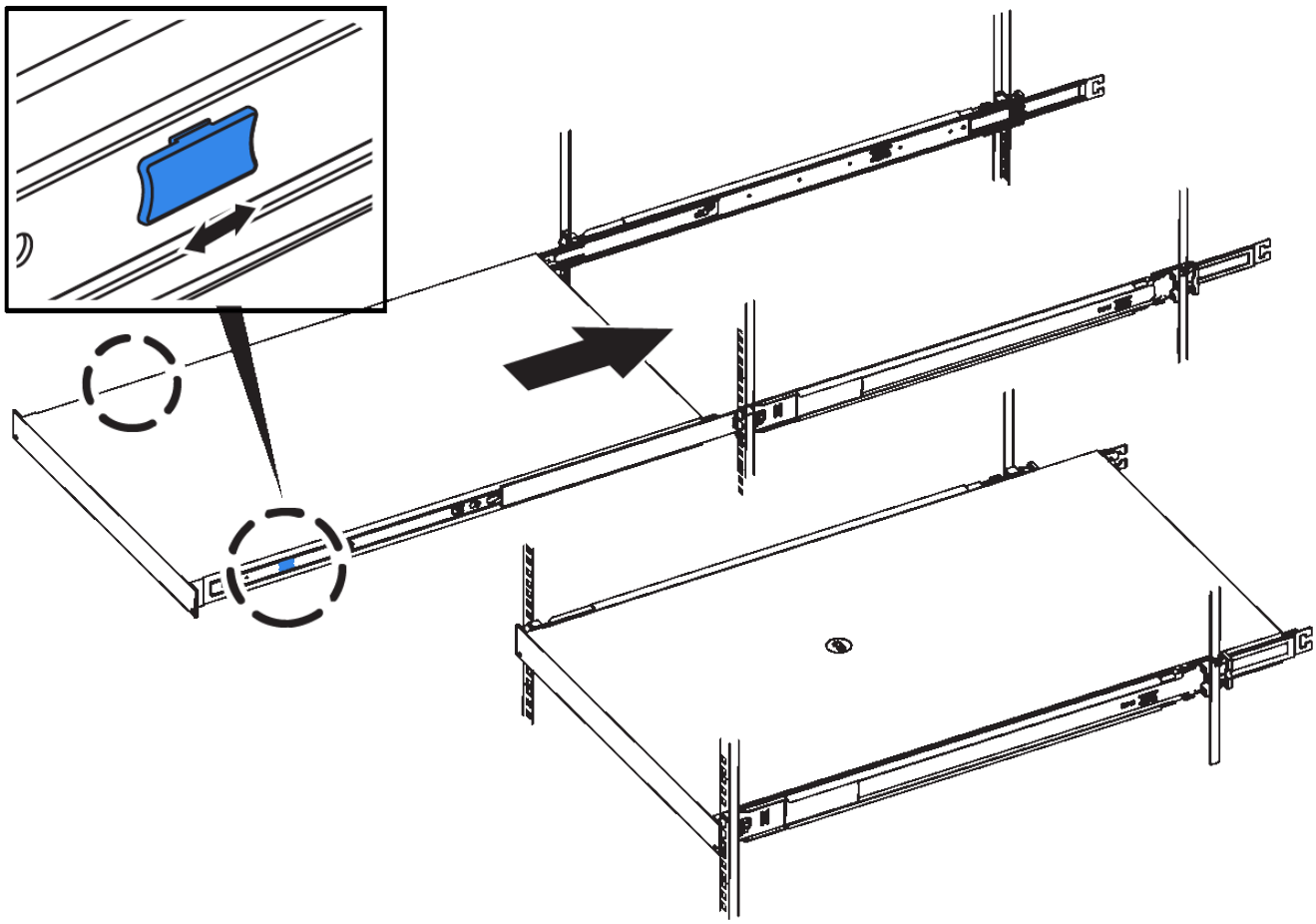

Do not attach the front bezel until after you power on the appliance.

Cabling the appliance SG100 and SG1000

You must connect the management port on the appliance to the service laptop and connect the network ports on the appliance to the Grid Network and optional Client Network for StorageGRID.

What you'll need

- You have an RJ-45 Ethernet cable for connecting the management port.
- You have one of the following options for the network ports. These items are not provided with the appliance.
  - One to four TwinAx cables for connecting the four network ports.
  - For the SG100, one to four SFP+ or SFP28 transceivers if you plan to use optical cables for the ports.
  - For the SG1000, one to four QSFP+ or QSFP28 transceivers if you plan to use optical cables for the ports.

Risk of exposure to laser radiation — Do not disassemble or remove any part of a SFP or QSFP transceiver. You might be exposed to laser radiation.

About this task

The following figures show the ports on the back of the appliance.

SG100 port connections

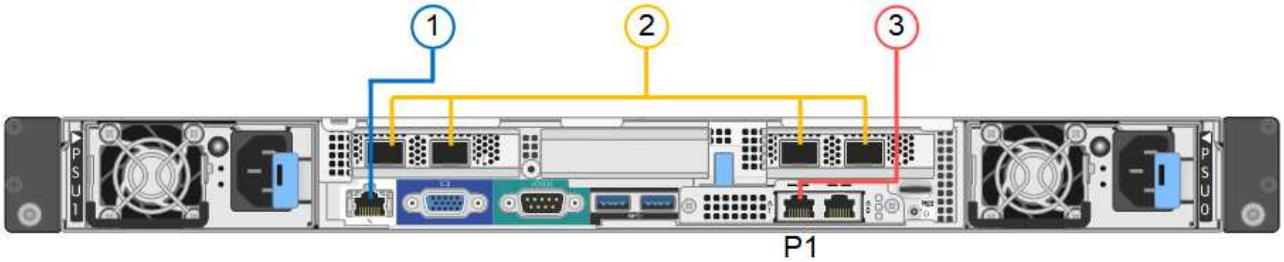

SG1000 port connections

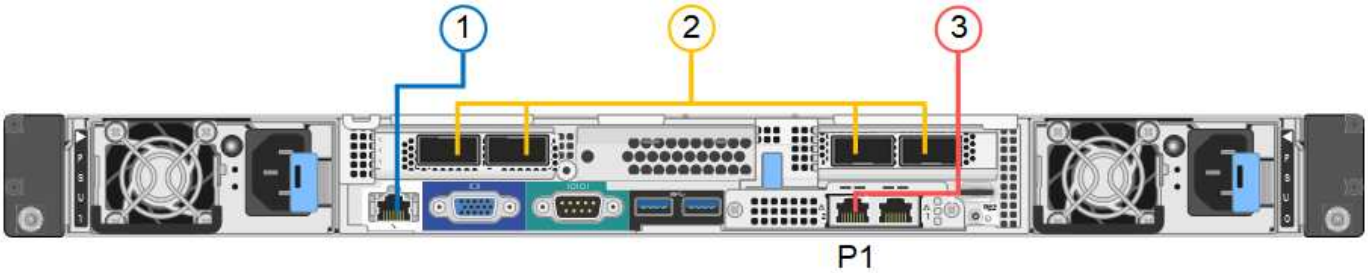

	Port	Type of port	Function
1	BMC management port on the appliance	1-GbE (RJ-45)	Connects to the network where you access the BMC interface.
2	Four network ports on the appliance	• For the SG100: 10/25-GbE • For the SG1000: 10/25/40/100-GbE	Connect to the Grid Network and the Client Network for StorageGRID.
3	Admin Network port on the appliance (labelled P1 in the figures)	1-GbE (RJ-45) **Important:** This port operates only at 1000 baseT/full and does not support 10- or 100-megabit speeds.	Connects the appliance to the Admin Network for StorageGRID.
3	Rightmost RJ-45 port on the appliance	1-GbE (RJ-45) **Important:** This port operates only at 1000 baseT/full and does not support 10- or 100-megabit speeds.	• Can be bonded with management port 1 if you want a redundant connection to the Admin Network. • Can be left disconnected and available for temporary local access (IP 169.254.0.1). • During installation, can be used to connect the appliance to a service laptop if DHCP-assigned IP addresses are not available.

Steps

1. Connect the BMC management port on the appliance to the management network, using an Ethernet cable.

   Although this connection is optional, it is recommended to facilitate support.

2. Connect the network ports on the appliance to the appropriate network switches, using TwinAx cables or optical cables and transceivers.

   > The four network ports must use the same link speed. See the following tables for the equipment required based on your hardware and link speed.

SG100 link speed (GbE)	Required equipment
10	SFP+ transceiver
25	SFP28 transceiver
SG1000 link speed (GbE)	**Required equipment**
10	QSA and SFP+ transceiver
25	QSA and SFP28 transceiver
40	QSFP+ transceiver
100	QFSP28 transceiver

   - If you plan to use Fixed port bond mode (default), connect the ports to the StorageGRID Grid and Client Networks, as shown in the table.

Port	Connects to…
Port 1	Client Network (optional)
Port 2	Grid Network
Port 3	Client Network (optional)
Port 4	Grid Network

   - If you plan to use the Aggregate port bond mode, connect one or more of the network ports to one or more switches. You should connect at least two of the four ports to avoid having a single point of failure. If you use more than one switch for a single LACP bond, the switches must support MLAG or equivalent.

3. If you plan to use the Admin Network for StorageGRID, connect the Admin Network port on the appliance to the Admin Network, using an Ethernet cable.

Connecting power cords and applying power (SG100 and SG1000)

After connecting the network cables, you are ready to apply power to the appliance.

Steps

1. Connect a power cord to each of the two power supply units in the appliance.
2. Connect these two power cords to two different power distribution units (PDUs) in the cabinet or rack.
3. If the power button on the front of the appliance is not currently illuminated blue, press the button to turn on power to the appliance.

   Do not press the power button again during the power-on process.

4. If errors occur, correct any issues.
5. Attach the front bezel to the appliance.

Related information

Viewing status indicators on the SG100 and SG1000 appliances

Viewing status indicators on the SG100 and SG1000 appliances

The appliance includes indicators that help you determine the status of the appliance controller and the two SSDs.

Appliance indicators and buttons

	Display	State
1	Power button	• Blue: the appliance is powered on. • Off: the appliance is powered off.
2	Reset button	Use this button to perform a hard reset of the controller.

	Display	State
3	Identify button	This button can be set to Blink, On (Solid), or Off. • Blue, blinking: Identifies the appliance in the cabinet or rack. • Blue, solid: Identifies the appliance in the cabinet or rack. • Off: The appliance is not visually identifiable in the cabinet or rack.
4	Alarm LED	• Amber, solid: An error has occurred. **Note:** To view the boot-up and error codes, you must access the BMC interface. • Off: No errors are present.

General boot-up codes

During boot-up or after a hard reset of the appliance, the following occurs:

1. The baseboard management controller (BMC) logs codes for the boot-up sequence, including any errors that occur.
2. The power button lights up.
3. If any errors occur during boot-up, the alarm LED lights up.

   To view the boot-up and error codes, you must access the BMC interface.

SSD indicators

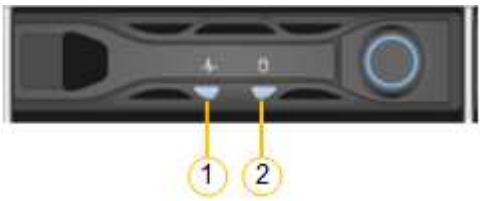

LED	Display	State
1	Drive status/fault	• Blue (solid): drive is online • Amber (blinking): drive failure • Off: slot is empty
2	Drive active	Blue (blinking): drive is being accessed

Related information

Troubleshooting the hardware installation

Configuring the BMC interface

Copyright information

Copyright © 2024 NetApp, Inc. All Rights Reserved. Printed in the U.S. No part of this document covered by copyright may be reproduced in any form or by any means—graphic, electronic, or mechanical, including photocopying, recording, taping, or storage in an electronic retrieval system—without prior written permission of the copyright owner.

Software derived from copyrighted NetApp material is subject to the following license and disclaimer:

THIS SOFTWARE IS PROVIDED BY NETAPP “AS IS” AND WITHOUT ANY EXPRESS OR IMPLIED WARRANTIES, INCLUDING, BUT NOT LIMITED TO, THE IMPLIED WARRANTIES OF MERCHANTABILITY AND FITNESS FOR A PARTICULAR PURPOSE, WHICH ARE HEREBY DISCLAIMED. IN NO EVENT SHALL NETAPP BE LIABLE FOR ANY DIRECT, INDIRECT, INCIDENTAL, SPECIAL, EXEMPLARY, OR CONSEQUENTIAL DAMAGES (INCLUDING, BUT NOT LIMITED TO, PROCUREMENT OF SUBSTITUTE GOODS OR SERVICES; LOSS OF USE, DATA, OR PROFITS; OR BUSINESS INTERRUPTION) HOWEVER CAUSED AND ON ANY THEORY OF LIABILITY, WHETHER IN CONTRACT, STRICT LIABILITY, OR TORT (INCLUDING NEGLIGENCE OR OTHERWISE) ARISING IN ANY WAY OUT OF THE USE OF THIS SOFTWARE, EVEN IF ADVISED OF THE POSSIBILITY OF SUCH DAMAGE.

NetApp reserves the right to change any products described herein at any time, and without notice. NetApp assumes no responsibility or liability arising from the use of products described herein, except as expressly agreed to in writing by NetApp. The use or purchase of this product does not convey a license under any patent rights, trademark rights, or any other intellectual property rights of NetApp.

The product described in this manual may be protected by one or more U.S. patents, foreign patents, or pending applications.

LIMITED RIGHTS LEGEND: Use, duplication, or disclosure by the government is subject to restrictions as set forth in subparagraph (b)(3) of the Rights in Technical Data -Noncommercial Items at DFARS 252.227-7013 (FEB 2014) and FAR 52.227-19 (DEC 2007).

Data contained herein pertains to a commercial product and/or commercial service (as defined in FAR 2.101) and is proprietary to NetApp, Inc. All NetApp technical data and computer software provided under this Agreement is commercial in nature and developed solely at private expense. The U.S. Government has a non-exclusive, non-transferrable, nonsublicensable, worldwide, limited irrevocable license to use the Data only in connection with and in support of the U.S. Government contract under which the Data was delivered. Except as provided herein, the Data may not be used, disclosed, reproduced, modified, performed, or displayed without the prior written approval of NetApp, Inc. United States Government license rights for the Department of Defense are limited to those rights identified in DFARS clause 252.227-7015(b) (FEB 2014).

Trademark information

NETAPP, the NETAPP logo, and the marks listed at http://www.netapp.com/TM are trademarks of NetApp, Inc. Other company and product names may be trademarks of their respective owners.