StorageGRID networking overview

StorageGRID 11.5

NetApp
February 20, 2024

This PDF was generated from https://docs.netapp.com/us-en/storagegrid-115/network/storagegrid-network-types.html on February 20, 2024. Always check docs.netapp.com for the latest.

Table of Contents

StorageGRID networking overview 1
StorageGRID network types 2
Network topology examples 5

StorageGRID networking overview

Configuring the networking for a StorageGRID system requires a high level of experience with Ethernet switching, TCP/IP networking, subnets, network routing, and firewalls.

Before you configure networking, become familiar with StorageGRID architecture as described in the *Grid primer*.

Before you deploy and configure StorageGRID, you must configure the networking infrastructure. Communication needs to occur among all the nodes in the grid and between the grid and external clients and services.

External clients and external services need to connect to StorageGRID networks to perform functions such as the following:

- Store and retrieve object data
- Receive email notifications
- Access the StorageGRID management interface (the Grid Manager and Tenant Manager)
- Access the audit share (optional)
- Provide services such as:
  - Network Time Protocol (NTP)
  - Domain Name System (DNS)
  - Key Management Server (KMS)

StorageGRID networking must be configured appropriately to handle the traffic for these functions and more.

After you determine which of the three StorageGRID networks you want to use and how those networks will be configured, you can install and configure the StorageGRID nodes by following the appropriate instructions.

Related information

Grid primer

Administer StorageGRID

Release notes

Install Red Hat Enterprise Linux or CentOS

Install Ubuntu or Debian

Install VMware

SG100 & SG1000 services appliances

SG6000 storage appliances

SG5700 storage appliances

SG5600 storage appliances

StorageGRID network types

The grid nodes in a StorageGRID system process *grid traffic*, *admin traffic*, and *client traffic*. You must configure the networking appropriately to manage these three types of traffic and to provide control and security.

Traffic types

Traffic type	Description	Network type
Grid traffic	The internal StorageGRID traffic that travels between all nodes in the grid. All grid nodes must be able to communicate with all other grid nodes over this network.	Grid Network (required)
Admin traffic	The traffic used for system administration and maintenance.	Admin Network (optional)
Client traffic	The traffic that travels between external client applications and the grid, including all object storage requests from S3 and Swift clients.	Client Network (optional)

You can configure networking in the following ways:

- Grid Network only
- Grid and Admin Networks
- Grid and Client Networks
- Grid, Admin, and Client Networks

The Grid Network is mandatory and can manage all grid traffic. The Admin and Client Networks can be included at the time of installation or added later to adapt to changes in requirements. Although the Admin Network and Client Network are optional, when you use these networks to handle administrative and client traffic, the Grid Network can be made isolated and secure.

Network interfaces

StorageGRID nodes are connected to each network using the following specific interfaces:

Network	Interface name
Grid Network (required)	eth0
Admin Network (optional)	eth1
Client Network (optional)	eth2

For details about mapping virtual or physical ports to node network interfaces, see the installation instructions.

You must configure the following for each network you enable on a node:

- IP address
- Subnet mask
- Gateway IP address

You can only configure one IP address/mask/gateway combination for each of the three networks on each grid node. If you do not want to configure a gateway for a network, you should use the IP address as the gateway address.

High availability (HA) groups provide the ability to add virtual IP addresses to the Grid or Client Network interface. For more information, see the instructions for administering StorageGRID.

Grid Network

The Grid Network is required. It is used for all internal StorageGRID traffic. The Grid Network provides connectivity among all nodes in the grid, across all sites and subnets. All nodes on the Grid Network must be able to communicate with all other nodes. The Grid Network can consist of multiple subnets. Networks containing critical grid services, such as NTP, can also be added as grid subnets.

> StorageGRID does not support network address translation (NAT) between nodes.

The Grid Network can be used for all admin traffic and all client traffic, even if the Admin Network and Client Network are configured. The Grid Network gateway is the node default gateway unless the node has the Client Network configured.

> When configuring the Grid Network, you must ensure that the network is secured from untrusted clients, such as those on the open internet.

Note the following requirements and details for the Grid Network:

- The Grid Network gateway must be configured if there are multiple grid subnets.
- The Grid Network gateway is the node default gateway until grid configuration is complete.
- Static routes are generated automatically for all nodes to all subnets configured in the global Grid Network Subnet List.
- If a Client Network is added, the default gateway switches from the Grid Network gateway to the Client Network gateway when grid configuration is complete.

Admin Network

The Admin Network is optional. When configured, it can be used for system administration and maintenance traffic. The Admin Network is typically a private network and does not need to be routable between nodes.

You can choose which grid nodes should have the Admin Network enabled on them.

By using an Admin Network, administrative and maintenance traffic does not need to travel across the Grid Network. Typical uses of the Admin Network include access to the Grid Manager user interface; access to critical services such as NTP, DNS, external key management (KMS), and Lightweight Directory Access Protocol (LDAP); access to audit logs on Admin Nodes; and Secure Shell Protocol (SSH) access for maintenance and support.

The Admin Network is never used for internal grid traffic. An Admin Network gateway is provided and allows the Admin Network to communicate with multiple external subnets. However, the Admin Network gateway is

never used as the node default gateway.

Note the following requirements and details for the Admin Network:

- The Admin Network gateway is required if connections will be made from outside of the Admin Network subnet or if multiple Admin Network subnets are configured.
- Static routes are created for each subnet configured in the node's Admin Network Subnet List.

Client Network

The Client Network is optional. When configured, it is used to provide access to grid services for client applications such as S3 and Swift. If you plan to make StorageGRID data accessible to an external resource (for example, a Cloud Storage Pool or the StorageGRID CloudMirror replication service), the external resource can also use the Client Network. Grid nodes can communicate with any subnet reachable through the Client Network gateway.

You can choose which grid nodes should have the Client Network enabled on them. All nodes do not have to be on the same Client Network, and nodes will never communicate with each other over the Client Network. The Client Network does not become operational until grid installation is complete.

For added security, you can specify that a node's Client Network interface be untrusted so that the Client Network will be more restrictive of which connections are allowed. If a node's Client Network interface is untrusted, the interface accepts outbound connections such as those used by CloudMirror replication, but only accepts inbound connections on ports that have been explicitly configured as load balancer endpoints. For more information about the Untrusted Client Network feature and the Load Balancer service, see the instructions for administering StorageGRID.

When you use a Client Network, client traffic does not need to travel across the Grid Network. Grid Network traffic can be separated onto a secure, non-routable network. The following node types are often configured with a Client Network:

- Gateway Nodes, because these nodes provide access to the StorageGRID Load Balancer service and S3 and Swift client access to the grid.
- Storage Nodes, because these nodes provide access to the S3 and Swift protocols and to Cloud Storage Pools and the CloudMirror replication service.
- Admin Nodes, to ensure that tenant users can connect to theTenant Manager without needing to using the Admin Network.

Note the following for the Client Network:

- The Client Network gateway is required if the Client Network is configured.
- The Client Network gateway becomes the default route for the grid node when grid configuration is complete.

Related information

Networking requirements and guidelines

Administer StorageGRID

SG100 & SG1000 services appliances

SG6000 storage appliances

SG5700 storage appliances

Install Red Hat Enterprise Linux or CentOS

Install Ubuntu or Debian

Install VMware

Network topology examples

In addition to the required Grid Network, you can choose whether to configure Admin Network and Client Network interfaces when designing the network topology for a single or multi-site deployment.

Internal ports are only accessible over the Grid Network. External ports are accessible from all network types. This flexibility provides multiple options for designing a StorageGRID deployment and setting up external IP and port filtering in switches and firewalls. For more information about internal and external ports, see the network port reference.

If you specify that a node's Client Network interface is untrusted, configure a load balancer endpoint to accept the inbound traffic. For information about configuring untrusted Client Networks and load balancer endpoints, see the instructions for administering StorageGRID.

Related information

Administer StorageGRID

Network port reference

Grid Network topology

The simplest network topology is created by configuring the Grid Network only.

When you configure the Grid Network, you establish the host IP address, subnet mask, and Gateway IP address for the eth0 interface for each grid node.

During configuration, you must add all Grid Network subnets to the Grid Network Subnet List (GNSL). This list includes all subnets for all sites, and might also include external subnets that provide access to critical services such as NTP, DNS, or LDAP.

At installation, the Grid Network interface applies static routes for all subnets in the GNSL and sets the node's default route to the Grid Network gateway if one is configured. The GNSL is not required if there is no Client Network and the Grid Network gateway is the node's default route. Host routes to all other nodes in the grid are also generated.

In this example, all traffic shares the same network, including traffic related to S3 and Swift client requests and administrative and maintenance functions.

> This topology is appropriate for single-site deployments that are not externally available, proof-of-concept or test deployments, or when a third-party load balancer acts as the client access boundary. When possible, the Grid Network should be used exclusively for internal traffic. Both the Admin Network and the Client Network have additional firewall restrictions that block external traffic to internal services. Using the Grid Network for external client traffic is supported, but this use offers fewer layers of protection.

Topology example: Grid Network only

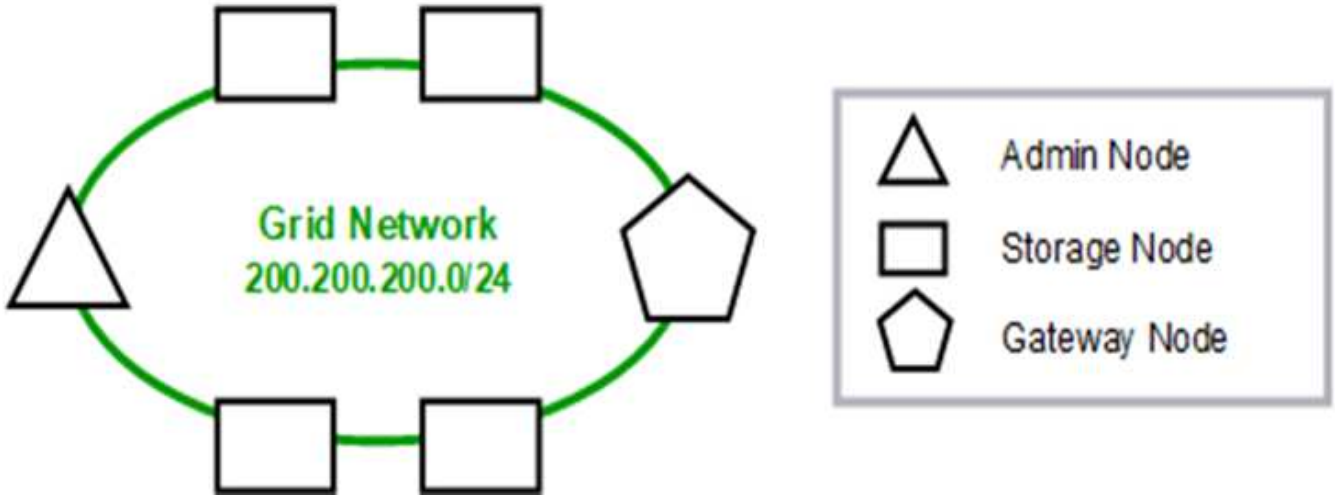

Provisioned

GNSL → 200.200.200.0/24		
	Grid Network	
Nodes	IP/mask	Gateway
Admin	200.200.200.32/24	200.200.200.1
Storage	200.200.200.33/24	200.200.200.1
Storage	200.200.200.34/24	200.200.200.1
Storage	200.200.200.35/24	200.200.200.1
Storage	200.200.200.36/24	200.200.200.1
Gateway	200.200.200.37/24	200.200.200.1

System Generated

Nodes	Routes			Type	From
All	0.0.0.0/0	→	200.200.200.1	Default	Grid Network gateway
	200.200.200.0/24	→	eth0	Link	Interface IP/mask

Admin Network topology

Having an Admin Network is optional. One way that you can use an Admin Network and a Grid Network is to configure a routable Grid Network and a bounded Admin Network for each node.

When you configure the Admin Network, you establish the host IP address, subnet mask, and Gateway IP address for the eth1 interface for each grid node.

The Admin Network can be unique to each node and can consist of multiple subnets. Each node can be configured with an Admin External Subnet List (AESL). The AESL lists the subnets reachable over the Admin Network for each node. The AESL must also include the subnets of any services the grid will access over the Admin Network, such as NTP, DNS, KMS, and LDAP. Static routes are applied for each subnet in the AESL.

In this example, the Grid Network is used for traffic related to S3 and Swift client requests and object management. while the Admin Network is used for administrative functions.

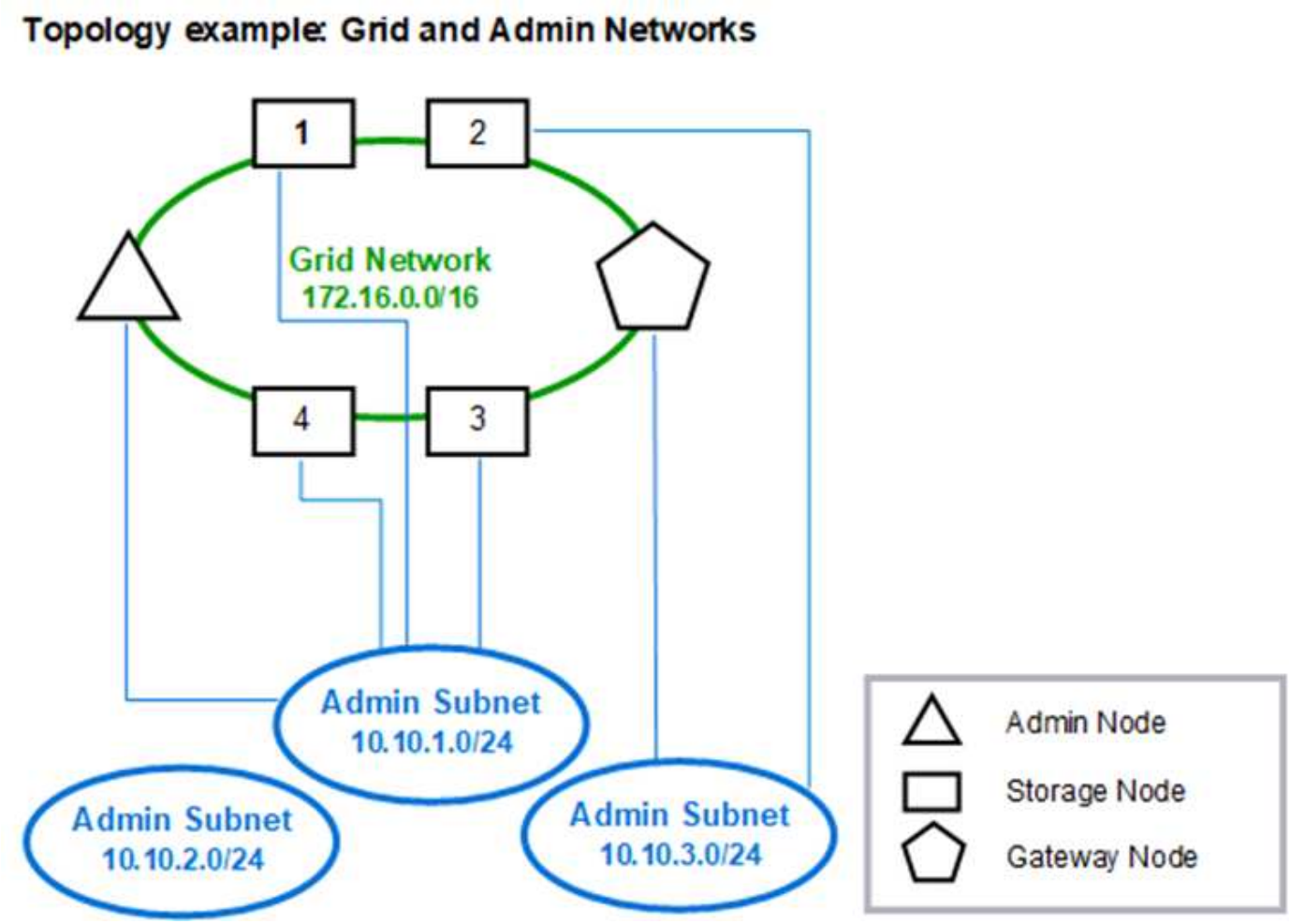

Provisioned

GNSL → 172.16.0.0/16
AESL (all) → 10.10.1.0/24 10.10.2.0/24 10.10.3.0/24

	Grid Network		Admin Network	
Nodes	**IP/mask**	**Gateway**	**IP/mask**	**Gateway**
Admin	172.16.200.32/24	172.16.200.1	10.10.1.10/24	10.10.1.1
Storage 1	172.16.200.33/24	172.16.200.1	10.10.1.11/24	10.10.1.1
Storage 2	172.16.200.34/24	172.16.200.1	10.10.3.65/24	10.10.3.1
Storage 3	172.16.200.35/24	172.16.200.1	10.10.1.12/24	10.10.1.1
Storage 4	172.16.200.36/24	172.16.200.1	10.10.1.13/24	10.10.1.1
Gateway	172.16.200.37/24	172.16.200.1	10.10.3.66/24	10.10.3.1

System Generated

Nodes	Routes			Type	From
All	0.0.0.0/0	→	172.16.200.1	Default	Grid Network gateway
Admin, Storage 1, 3, and 4	172.16.0.0/16	→	eth0	Static	GNSL
	10.10.1.0/24	→	eth1	Link	Interface IP/mask
	10.10.2.0/24	→	10.10.1.1	Static	AESL
	10.10.3.0/24	→	10.10.1.1	Static	AESL
Storage 2, Gateway	172.16.0.0/16	→	eth0	Static	GNSL
	10.10.1.0/24	→	10.10.3.1	Static	AESL
	10.10.2.0/24	→	10.10.3.1	Static	AESL
	10.10.3.0/24	→	eth1	Link	Interface IP/mask

Client Network topology

Having a Client Network is optional. Using a Client Network allows client network traffic (for example, S3 and Swift) to be separated from grid internal traffic, which allows grid networking to be more secure. Administrative traffic can be handled by either the Client or Grid Network when the Admin Network is not configured.

When you configure the Client Network, you establish the host IP address, subnet mask, and Gateway IP address for the eth2 interface for the configured node. Each node's Client Network can be independent of the Client Network on any other node.

If you configure a Client Network for a node during installation, the node's default gateway switches from the Grid Network gateway to the Client Network gateway when installation is complete. If a Client Network is added later, the node's default gateway switches in the same way.

In this example, the Client Network is used for S3 and Swift client requests and for administrative functions, while the Grid Network is dedicated to internal object management operations.

Topology example: Grid and Client Networks

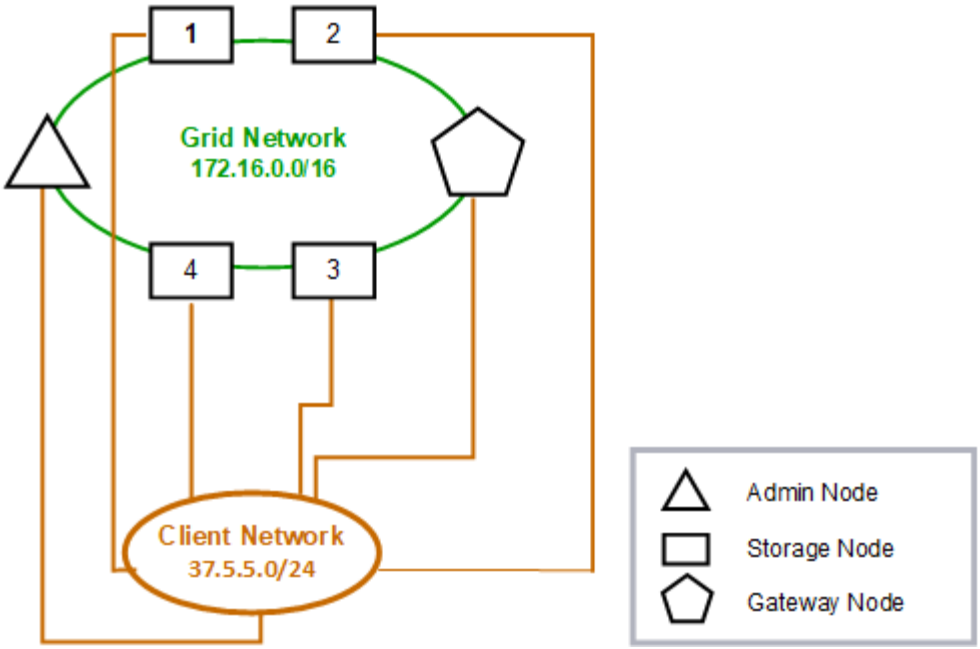

Provisioned

GNSL → 172.16.0.0/16			
	Grid Network	Client Network	
Nodes	IP/mask	IP/mask	Gateway
Admin	172.16.200.32/24	37.5.5.10/24	37.5.5.1
Storage	172.16.200.33/24	37.5.5.11/24	37.5.5.1
Storage	172.16.200.34/24	37.5.5.12/24	37.5.5.1
Storage	172.16.200.35/24	37.5.5.13/24	37.5.5.1
Storage	172.16.200.36/24	37.5.5.14/24	37.5.5.1
Gateway	172.16.200.37/24	37.5.5.15/24	37.5.5.1

System Generated

Nodes	Routes			Type	From
All	0.0.0.0/0	→	37.5.5.1	Default	Client Network gateway
	172.16.0.0/16	→	eth0	Link	Interface IP/mask
	37.5.5.0/24	→	eth2	Link	Interface IP/mask

Topology for all three networks

You can configure all three networks into a network topology consisting of a private Grid Network, bounded site-specific Admin Networks, and open Client Networks. Using load

balancer endpoints and untrusted Client Networks can provide additional security if needed.

In this example:

- The Grid Network is used for network traffic related to internal object management operations.
- The Admin Network is used for traffic related to administrative functions.
- The Client Network is used for traffic related to S3 and Swift client requests.

Topology example: Grid, Admin, and Client Networks

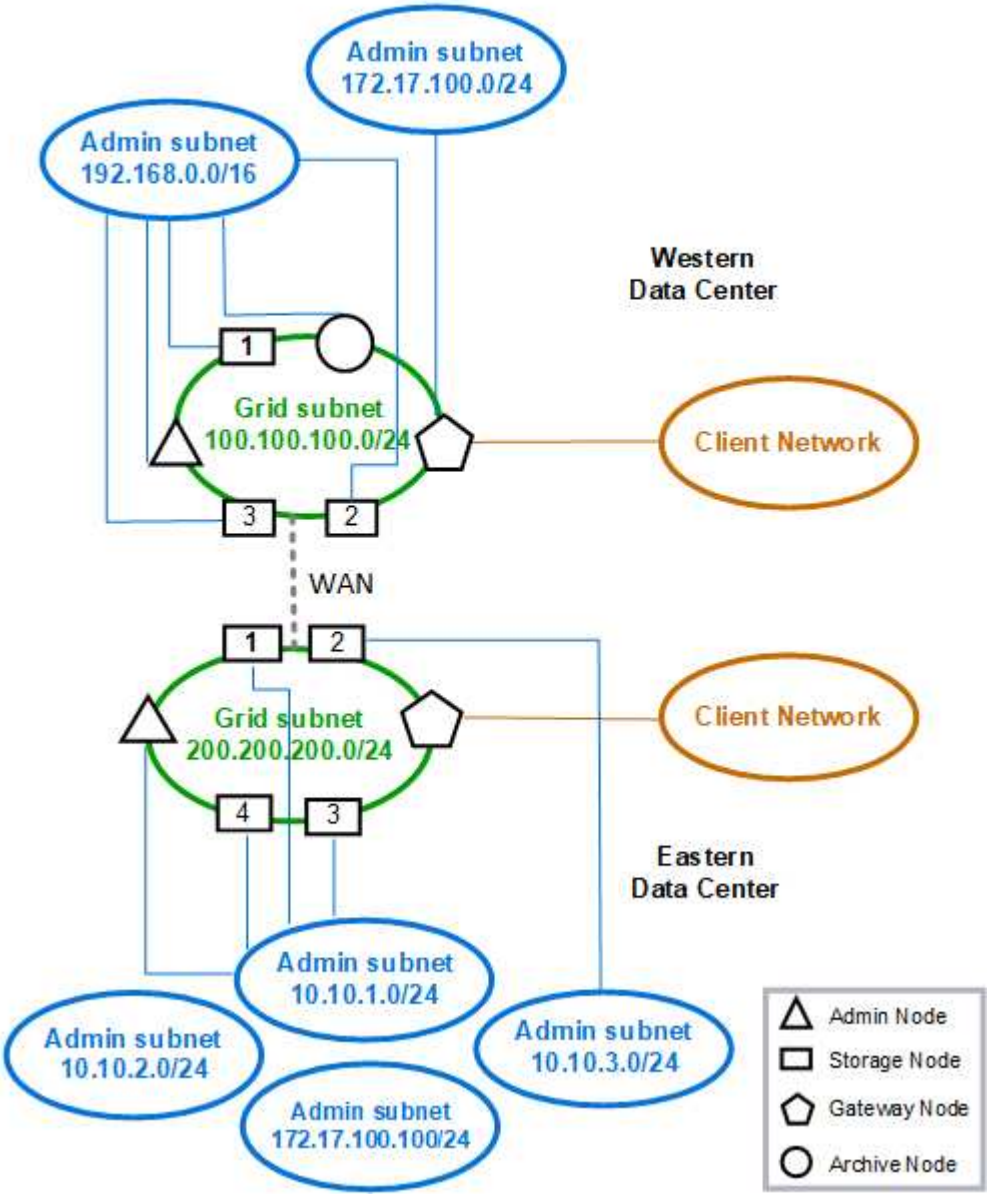

Copyright information

Copyright © 2024 NetApp, Inc. All Rights Reserved. Printed in the U.S. No part of this document covered by copyright may be reproduced in any form or by any means—graphic, electronic, or mechanical, including photocopying, recording, taping, or storage in an electronic retrieval system—without prior written permission of the copyright owner.

Software derived from copyrighted NetApp material is subject to the following license and disclaimer:

THIS SOFTWARE IS PROVIDED BY NETAPP “AS IS” AND WITHOUT ANY EXPRESS OR IMPLIED WARRANTIES, INCLUDING, BUT NOT LIMITED TO, THE IMPLIED WARRANTIES OF MERCHANTABILITY AND FITNESS FOR A PARTICULAR PURPOSE, WHICH ARE HEREBY DISCLAIMED. IN NO EVENT SHALL NETAPP BE LIABLE FOR ANY DIRECT, INDIRECT, INCIDENTAL, SPECIAL, EXEMPLARY, OR CONSEQUENTIAL DAMAGES (INCLUDING, BUT NOT LIMITED TO, PROCUREMENT OF SUBSTITUTE GOODS OR SERVICES; LOSS OF USE, DATA, OR PROFITS; OR BUSINESS INTERRUPTION) HOWEVER CAUSED AND ON ANY THEORY OF LIABILITY, WHETHER IN CONTRACT, STRICT LIABILITY, OR TORT (INCLUDING NEGLIGENCE OR OTHERWISE) ARISING IN ANY WAY OUT OF THE USE OF THIS SOFTWARE, EVEN IF ADVISED OF THE POSSIBILITY OF SUCH DAMAGE.

NetApp reserves the right to change any products described herein at any time, and without notice. NetApp assumes no responsibility or liability arising from the use of products described herein, except as expressly agreed to in writing by NetApp. The use or purchase of this product does not convey a license under any patent rights, trademark rights, or any other intellectual property rights of NetApp.

The product described in this manual may be protected by one or more U.S. patents, foreign patents, or pending applications.

LIMITED RIGHTS LEGEND: Use, duplication, or disclosure by the government is subject to restrictions as set forth in subparagraph (b)(3) of the Rights in Technical Data -Noncommercial Items at DFARS 252.227-7013 (FEB 2014) and FAR 52.227-19 (DEC 2007).

Data contained herein pertains to a commercial product and/or commercial service (as defined in FAR 2.101) and is proprietary to NetApp, Inc. All NetApp technical data and computer software provided under this Agreement is commercial in nature and developed solely at private expense. The U.S. Government has a non-exclusive, non-transferrable, nonsublicensable, worldwide, limited irrevocable license to use the Data only in connection with and in support of the U.S. Government contract under which the Data was delivered. Except as provided herein, the Data may not be used, disclosed, reproduced, modified, performed, or displayed without the prior written approval of NetApp, Inc. United States Government license rights for the Department of Defense are limited to those rights identified in DFARS clause 252.227-7015(b) (FEB 2014).

Trademark information

NETAPP, the NETAPP logo, and the marks listed at http://www.netapp.com/TM are trademarks of NetApp, Inc. Other company and product names may be trademarks of their respective owners.