What link costs are

StorageGRID 11.5

NetApp
February 20, 2024

This PDF was generated from https://docs.netapp.com/us-en/storagegrid-115/admin/updating-link-costs.html on February 20, 2024. Always check docs.netapp.com for the latest.

Table of Contents

What link costs are 1
Updating link costs 2

What link costs are

Link costs let you prioritize which data center site provides a requested service when two or more data center sites exist. You can adjust link costs to reflect latency between sites.

- Link costs are used to prioritize which object copy is used to fulfill object retrievals.
- Link costs are used by the Grid Management API and the Tenant Management API to determine which internal StorageGRID services to use.
- Link costs are used by the CLB service on Gateway Nodes to direct client connections.

> The CLB service is deprecated.

The diagram shows a three site grid that has link costs configured between sites:

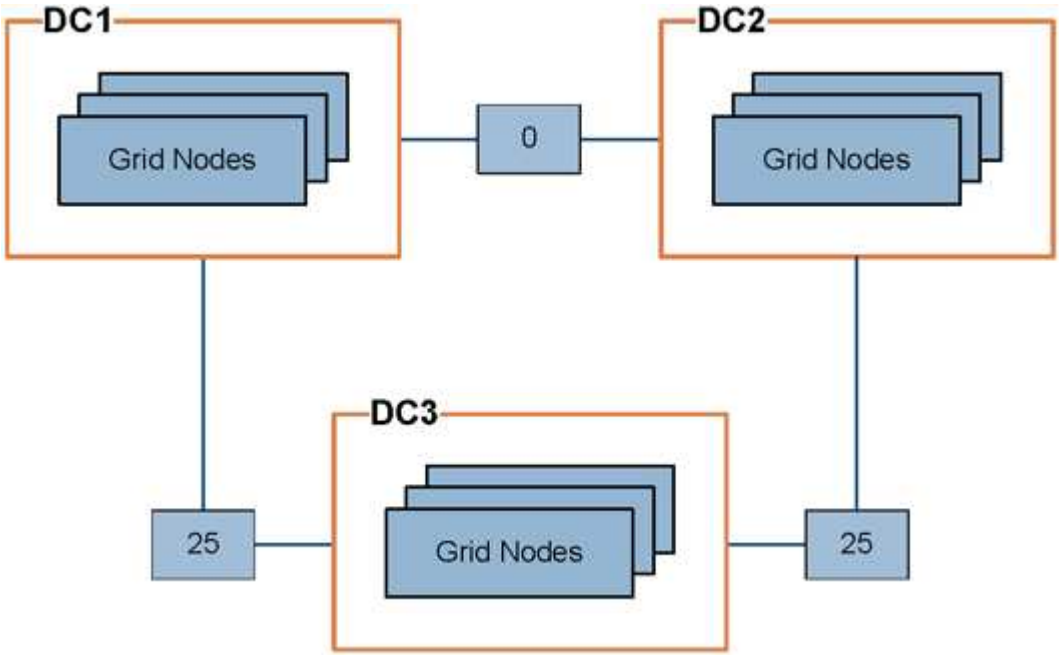

- The CLB service on Gateway Nodes equally distribute client connections to all Storage Nodes at the same data center site and to any data center sites with a link cost of 0.

  In the example, a Gateway Node at data center site 1 (DC1) equally distributes client connections to Storage Nodes at DC1 and to Storage Nodes at DC2. A Gateway Node at DC3 sends client connections only to Storage Nodes at DC3.

- When retrieving an object that exists as multiple replicated copies, StorageGRID retrieves the copy at the data center that has the lowest link cost.

  In the example, if a client application at DC2 retrieves an object that is stored both at DC1 and DC3, the object is retrieved from DC1, because the link cost from DC1 to D2 is 0, which is lower than the link cost from DC3 to DC2 (25).

Link costs are arbitrary relative numbers with no specific unit of measure. For example, a link cost of 50 is used less preferentially than a link cost of 25. The table shows commonly used link costs.

Link	Link cost	Notes
Between physical data center sites	25 (default)	Data centers connected by a WAN link.
Between logical data center sites at the same physical location	0	Logical data centers in the same physical building or campus connected by a LAN.

Related information

How load balancing works - CLB service

Updating link costs

You can update the link costs between data center sites to reflect latency between sites.

What you'll need

- You must be signed in to the Grid Manager using a supported browser.
- You must have the Grid Topology Page Configuration permission.

Steps

1. Select **Configuration** > **Network Settings** > **Link Cost**.

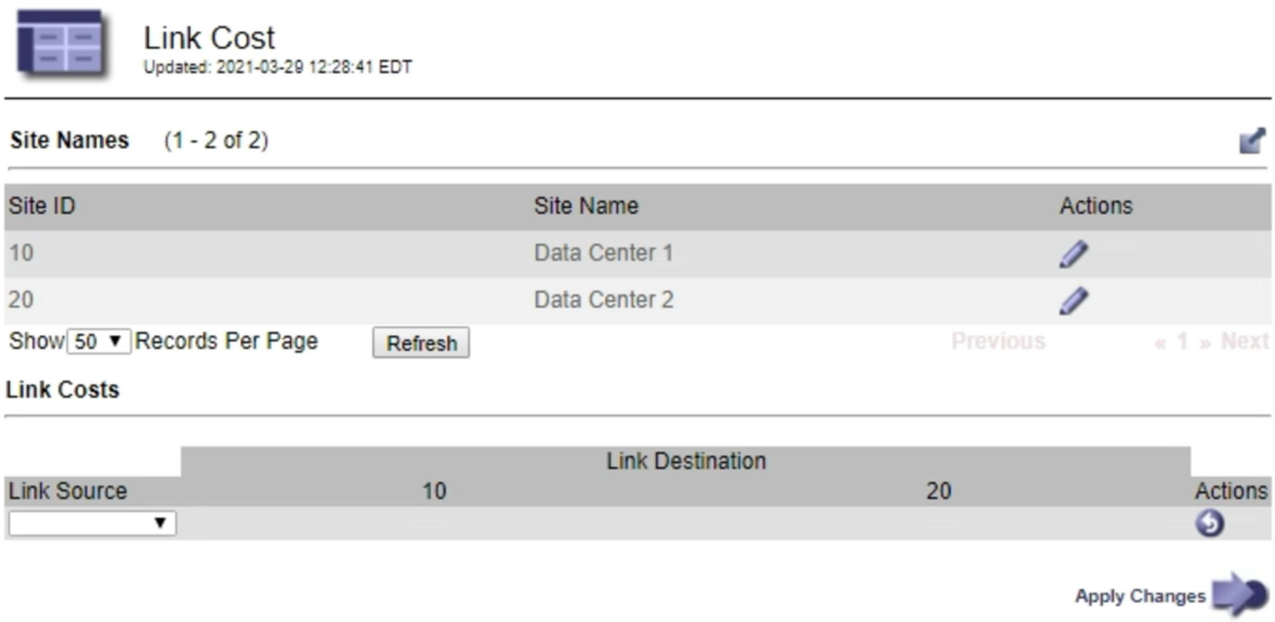

2. Select a site under **Link Source** and enter a cost value between 0 and 100 under **Link Destination**.

   You cannot change the link cost if the source is the same as the destination.

   To cancel changes, click **Revert**.

3. Click **Apply Changes**.

Copyright information

Copyright © 2024 NetApp, Inc. All Rights Reserved. Printed in the U.S. No part of this document covered by copyright may be reproduced in any form or by any means—graphic, electronic, or mechanical, including photocopying, recording, taping, or storage in an electronic retrieval system—without prior written permission of the copyright owner.

Software derived from copyrighted NetApp material is subject to the following license and disclaimer:

THIS SOFTWARE IS PROVIDED BY NETAPP “AS IS” AND WITHOUT ANY EXPRESS OR IMPLIED WARRANTIES, INCLUDING, BUT NOT LIMITED TO, THE IMPLIED WARRANTIES OF MERCHANTABILITY AND FITNESS FOR A PARTICULAR PURPOSE, WHICH ARE HEREBY DISCLAIMED. IN NO EVENT SHALL NETAPP BE LIABLE FOR ANY DIRECT, INDIRECT, INCIDENTAL, SPECIAL, EXEMPLARY, OR CONSEQUENTIAL DAMAGES (INCLUDING, BUT NOT LIMITED TO, PROCUREMENT OF SUBSTITUTE GOODS OR SERVICES; LOSS OF USE, DATA, OR PROFITS; OR BUSINESS INTERRUPTION) HOWEVER CAUSED AND ON ANY THEORY OF LIABILITY, WHETHER IN CONTRACT, STRICT LIABILITY, OR TORT (INCLUDING NEGLIGENCE OR OTHERWISE) ARISING IN ANY WAY OUT OF THE USE OF THIS SOFTWARE, EVEN IF ADVISED OF THE POSSIBILITY OF SUCH DAMAGE.

NetApp reserves the right to change any products described herein at any time, and without notice. NetApp assumes no responsibility or liability arising from the use of products described herein, except as expressly agreed to in writing by NetApp. The use or purchase of this product does not convey a license under any patent rights, trademark rights, or any other intellectual property rights of NetApp.

The product described in this manual may be protected by one or more U.S. patents, foreign patents, or pending applications.

LIMITED RIGHTS LEGEND: Use, duplication, or disclosure by the government is subject to restrictions as set forth in subparagraph (b)(3) of the Rights in Technical Data -Noncommercial Items at DFARS 252.227-7013 (FEB 2014) and FAR 52.227-19 (DEC 2007).

Data contained herein pertains to a commercial product and/or commercial service (as defined in FAR 2.101) and is proprietary to NetApp, Inc. All NetApp technical data and computer software provided under this Agreement is commercial in nature and developed solely at private expense. The U.S. Government has a non-exclusive, non-transferrable, nonsublicensable, worldwide, limited irrevocable license to use the Data only in connection with and in support of the U.S. Government contract under which the Data was delivered. Except as provided herein, the Data may not be used, disclosed, reproduced, modified, performed, or displayed without the prior written approval of NetApp, Inc. United States Government license rights for the Department of Defense are limited to those rights identified in DFARS clause 252.227-7015(b) (FEB 2014).

Trademark information

NETAPP, the NETAPP logo, and the marks listed at http://www.netapp.com/TM are trademarks of NetApp, Inc. Other company and product names may be trademarks of their respective owners.