Network topology examples

StorageGRID

NetApp
February 20, 2024

This PDF was generated from https://docs.netapp.com/us-en/storagegrid-116/network/grid-network-topology.html on February 20, 2024. Always check docs.netapp.com for the latest.

Table of Contents

Network topology examples . . . 1
Grid Network topology . . . 1
Admin Network topology . . . 2
Client Network topology . . . 4
Topology for all three networks . . . 6

Network topology examples

Grid Network topology

The simplest network topology is created by configuring the Grid Network only.

When you configure the Grid Network, you establish the host IP address, subnet mask, and Gateway IP address for the eth0 interface for each grid node.

During configuration, you must add all Grid Network subnets to the Grid Network Subnet List (GNSL). This list includes all subnets for all sites, and might also include external subnets that provide access to critical services such as NTP, DNS, or LDAP.

At installation, the Grid Network interface applies static routes for all subnets in the GNSL and sets the node's default route to the Grid Network gateway if one is configured. The GNSL is not required if there is no Client Network and the Grid Network gateway is the node's default route. Host routes to all other nodes in the grid are also generated.

In this example, all traffic shares the same network, including traffic related to S3 and Swift client requests and administrative and maintenance functions.

> This topology is appropriate for single-site deployments that are not externally available, proof-of-concept or test deployments, or when a third-party load balancer acts as the client access boundary. When possible, the Grid Network should be used exclusively for internal traffic. Both the Admin Network and the Client Network have additional firewall restrictions that block external traffic to internal services. Using the Grid Network for external client traffic is supported, but this use offers fewer layers of protection.

Topology example: Grid Network only

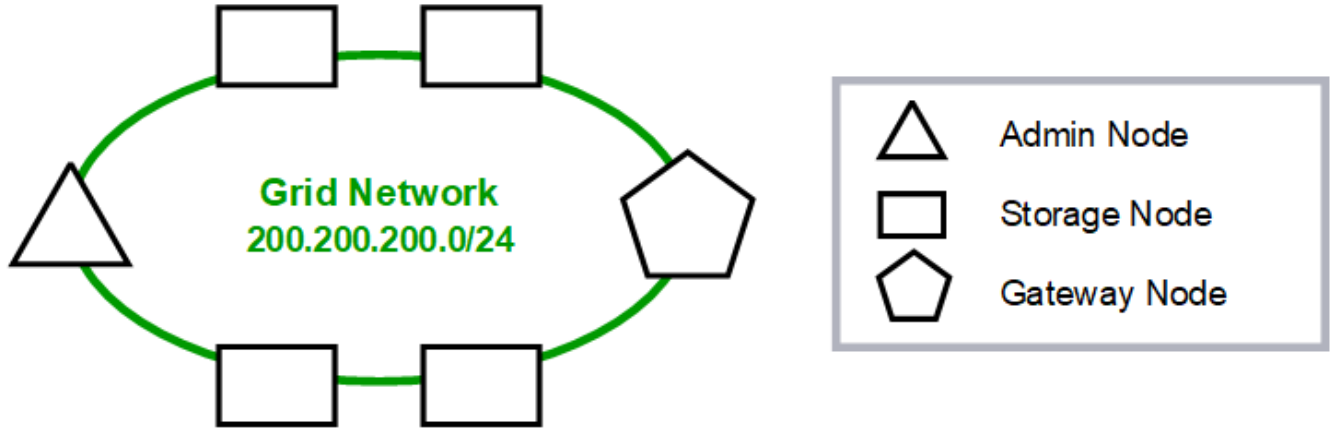

		Provisioned
GNSL → 200.200.200.0/24		
	Grid Network	
Nodes	**IP/mask**	**Gateway**
Admin	200.200.200.32/24	200.200.200.1
Storage	200.200.200.33/24	200.200.200.1
Storage	200.200.200.34/24	200.200.200.1
Storage	200.200.200.35/24	200.200.200.1
Storage	200.200.200.36/24	200.200.200.1
Gateway	200.200.200.37/24	200.200.200.1

System Generated

Nodes	**Routes**			**Type**	**From**
All	0.0.0.0/0	→	200.200.200.1	Default	Grid Network gateway
	200.200.200.0/24	→	eth0	Link	Interface IP/mask

Admin Network topology

Having an Admin Network is optional. One way that you can use an Admin Network and a Grid Network is to configure a routable Grid Network and a bounded Admin Network for each node.

When you configure the Admin Network, you establish the host IP address, subnet mask, and Gateway IP address for the eth1 interface for each grid node.

The Admin Network can be unique to each node and can consist of multiple subnets. Each node can be configured with an Admin External Subnet List (AESL). The AESL lists the subnets reachable over the Admin Network for each node. The AESL must also include the subnets of any services the grid will access over the Admin Network, such as NTP, DNS, KMS, and LDAP. Static routes are applied for each subnet in the AESL.

In this example, the Grid Network is used for traffic related to S3 and Swift client requests and object management. while the Admin Network is used for administrative functions.

Topology example: Grid and Admin Networks

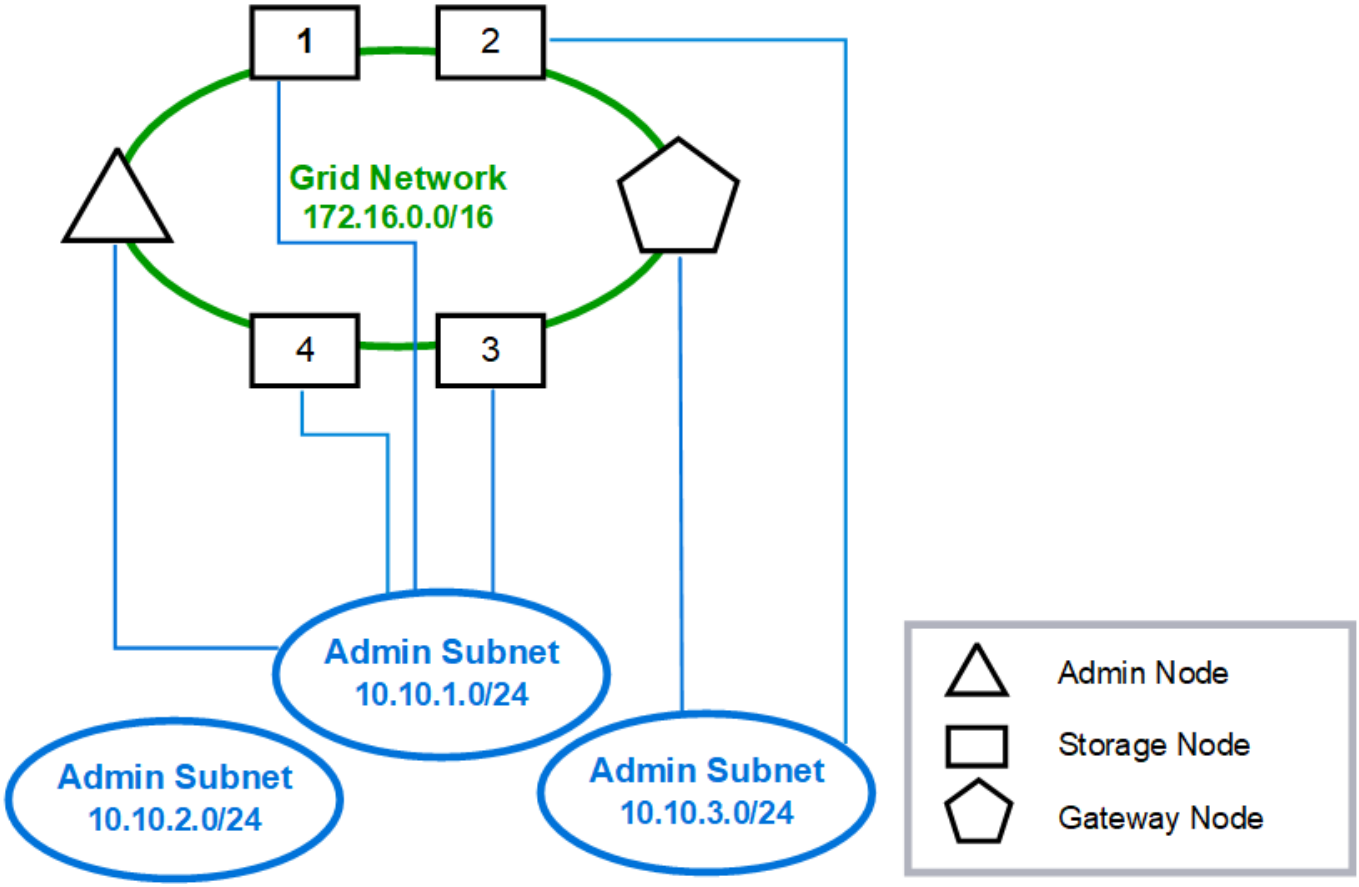

Provisioned

GNSL → 172.16.0.0/16
AESL (all) → 10.10.1.0/24 10.10.2.0/24 10.10.3.0/24

	Grid Network		Admin Network	
Nodes	**IP/mask**	**Gateway**	**IP/mask**	**Gateway**
Admin	172.16.200.32/24	172.16.200.1	10.10.1.10/24	10.10.1.1
Storage 1	172.16.200.33/24	172.16.200.1	10.10.1.11/24	10.10.1.1
Storage 2	172.16.200.34/24	172.16.200.1	10.10.3.65/24	10.10.3.1
Storage 3	172.16.200.35/24	172.16.200.1	10.10.1.12/24	10.10.1.1
Storage 4	172.16.200.36/24	172.16.200.1	10.10.1.13/24	10.10.1.1
Gateway	172.16.200.37/24	172.16.200.1	10.10.3.66/24	10.10.3.1

System Generated

Nodes	Routes			Type	From
All	0.0.0.0/0	→	172.16.200.1	Default	Grid Network gateway
Admin, Storage 1, 3, and 4	172.16.0.0/16	→	eth0	Static	GNSL
	10.10.1.0/24	→	eth1	Link	Interface IP/mask
	10.10.2.0/24	→	10.10.1.1	Static	AESL
	10.10.3.0/24	→	10.10.1.1	Static	AESL
Storage 2, Gateway	172.16.0.0/16	→	eth0	Static	GNSL
	10.10.1.0/24	→	10.10.3.1	Static	AESL
	10.10.2.0/24	→	10.10.3.1	Static	AESL
	10.10.3.0/24	→	eth1	Link	Interface IP/mask

Client Network topology

Having a Client Network is optional. Using a Client Network allows client network traffic (for example, S3 and Swift) to be separated from grid internal traffic, which allows grid networking to be more secure. Administrative traffic can be handled by either the Client or Grid Network when the Admin Network is not configured.

When you configure the Client Network, you establish the host IP address, subnet mask, and Gateway IP address for the eth2 interface for the configured node. Each node's Client Network can be independent of the Client Network on any other node.

If you configure a Client Network for a node during installation, the node's default gateway switches from the Grid Network gateway to the Client Network gateway when installation is complete. If a Client Network is added later, the node's default gateway switches in the same way.

In this example, the Client Network is used for S3 and Swift client requests and for administrative functions, while the Grid Network is dedicated to internal object management operations.

Topology example: Grid and Client Networks

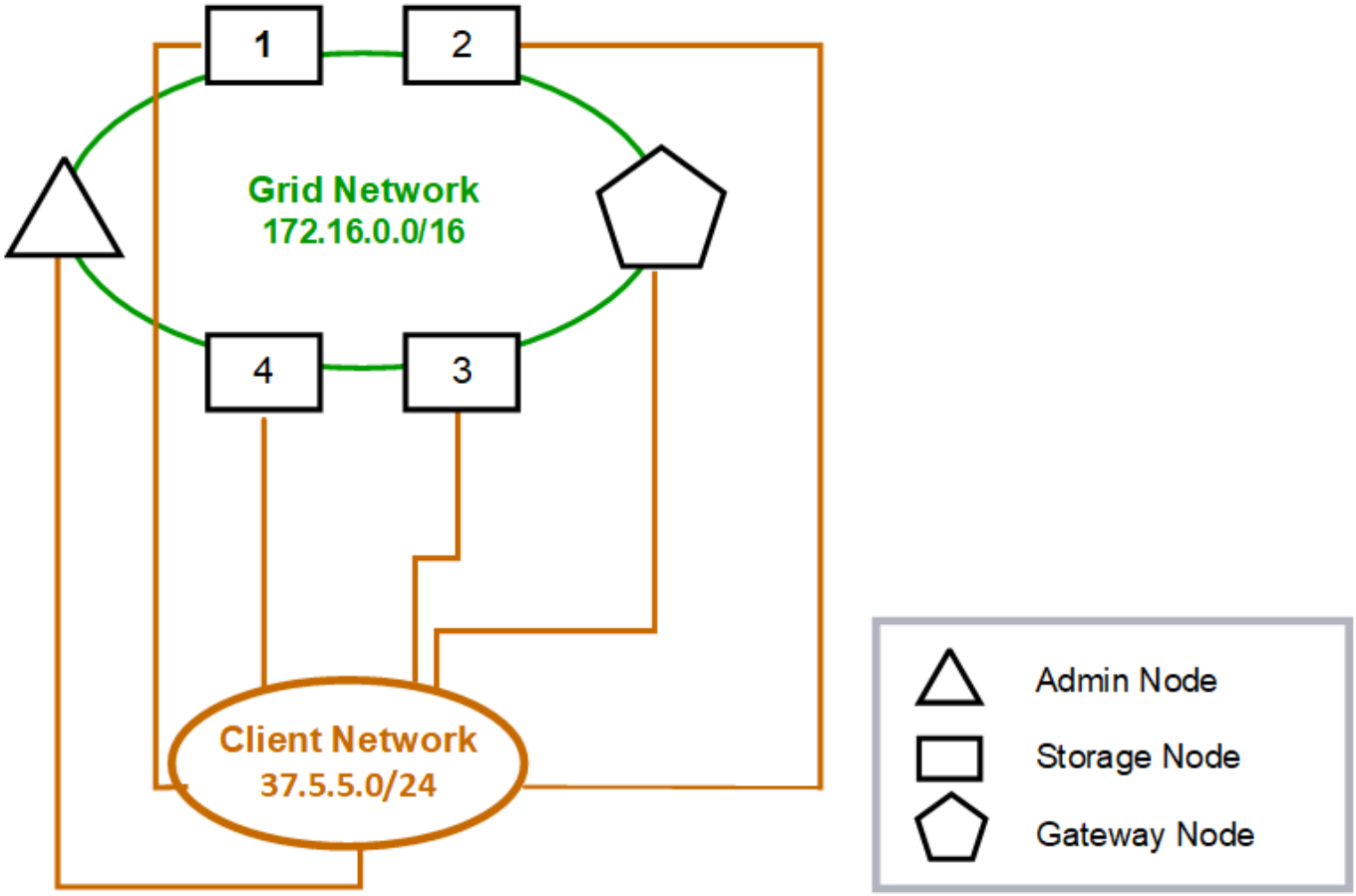

Provisioned

GNSL → 172.16.0.0/16			
	Grid Network	Client Network	
Nodes	IP/mask	IP/mask	Gateway
Admin	172.16.200.32/24	37.5.5.10/24	37.5.5.1
Storage	172.16.200.33/24	37.5.5.11/24	37.5.5.1
Storage	172.16.200.34/24	37.5.5.12/24	37.5.5.1
Storage	172.16.200.35/24	37.5.5.13/24	37.5.5.1
Storage	172.16.200.36/24	37.5.5.14/24	37.5.5.1
Gateway	172.16.200.37/24	37.5.5.15/24	37.5.5.1

System Generated

Nodes	Routes			Type	From
All	0.0.0.0/0	→	37.5.5.1	Default	Client Network gateway
	172.16.0.0/16	→	eth0	Link	Interface IP/mask
	37.5.5.0/24	→	eth2	Link	Interface IP/mask

Topology for all three networks

You can configure all three networks into a network topology consisting of a private Grid Network, bounded site-specific Admin Networks, and open Client Networks. Using load balancer endpoints and untrusted Client Networks can provide additional security if needed.

In this example:

- The Grid Network is used for network traffic related to internal object management operations.
- The Admin Network is used for traffic related to administrative functions.
- The Client Network is used for traffic related to S3 and Swift client requests.

Topology example: Grid, Admin, and Client Networks

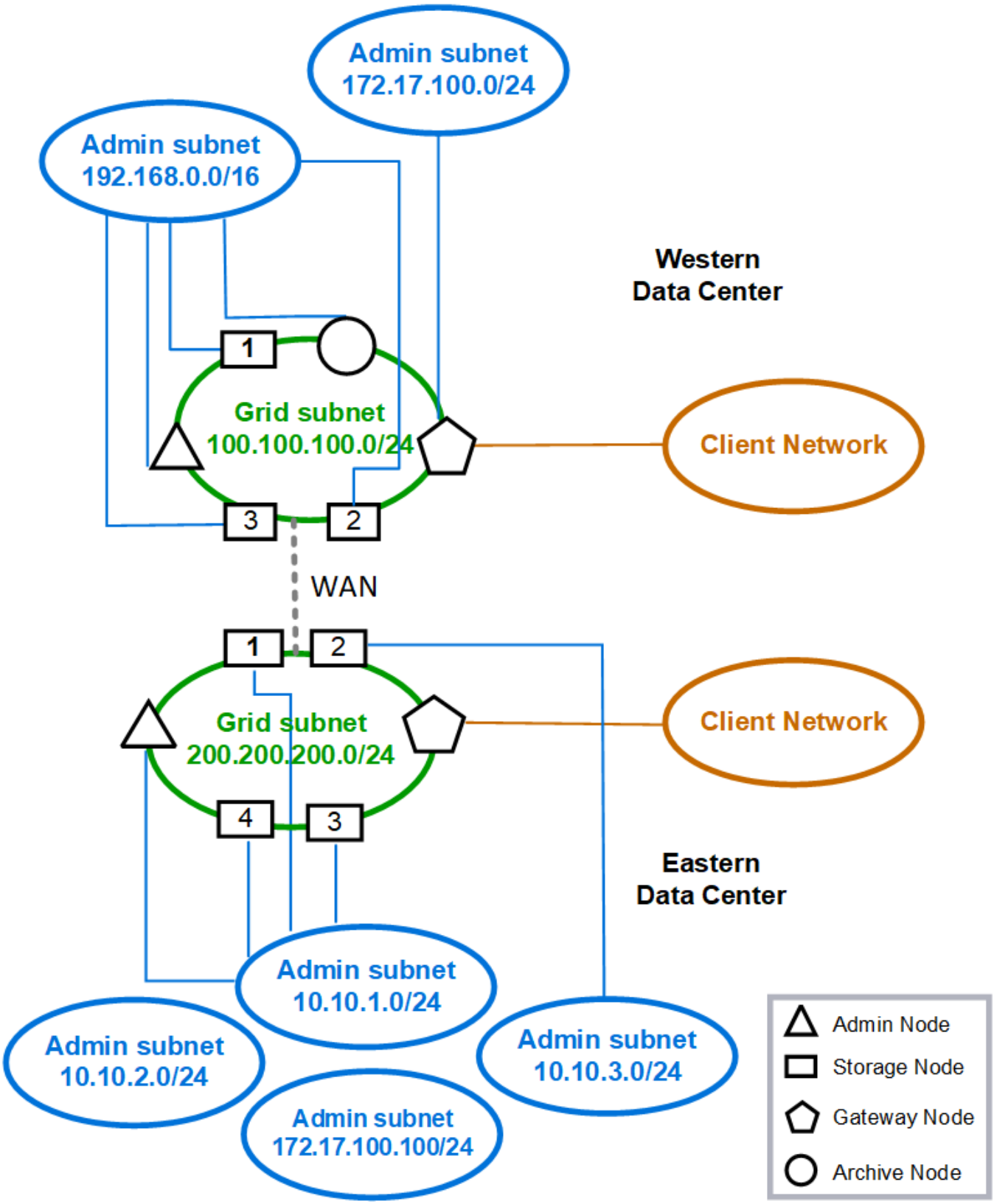

Copyright information

Copyright © 2024 NetApp, Inc. All Rights Reserved. Printed in the U.S. No part of this document covered by copyright may be reproduced in any form or by any means—graphic, electronic, or mechanical, including photocopying, recording, taping, or storage in an electronic retrieval system—without prior written permission of the copyright owner.

Software derived from copyrighted NetApp material is subject to the following license and disclaimer:

THIS SOFTWARE IS PROVIDED BY NETAPP “AS IS” AND WITHOUT ANY EXPRESS OR IMPLIED WARRANTIES, INCLUDING, BUT NOT LIMITED TO, THE IMPLIED WARRANTIES OF MERCHANTABILITY AND FITNESS FOR A PARTICULAR PURPOSE, WHICH ARE HEREBY DISCLAIMED. IN NO EVENT SHALL NETAPP BE LIABLE FOR ANY DIRECT, INDIRECT, INCIDENTAL, SPECIAL, EXEMPLARY, OR CONSEQUENTIAL DAMAGES (INCLUDING, BUT NOT LIMITED TO, PROCUREMENT OF SUBSTITUTE GOODS OR SERVICES; LOSS OF USE, DATA, OR PROFITS; OR BUSINESS INTERRUPTION) HOWEVER CAUSED AND ON ANY THEORY OF LIABILITY, WHETHER IN CONTRACT, STRICT LIABILITY, OR TORT (INCLUDING NEGLIGENCE OR OTHERWISE) ARISING IN ANY WAY OUT OF THE USE OF THIS SOFTWARE, EVEN IF ADVISED OF THE POSSIBILITY OF SUCH DAMAGE.

NetApp reserves the right to change any products described herein at any time, and without notice. NetApp assumes no responsibility or liability arising from the use of products described herein, except as expressly agreed to in writing by NetApp. The use or purchase of this product does not convey a license under any patent rights, trademark rights, or any other intellectual property rights of NetApp.

The product described in this manual may be protected by one or more U.S. patents, foreign patents, or pending applications.

LIMITED RIGHTS LEGEND: Use, duplication, or disclosure by the government is subject to restrictions as set forth in subparagraph (b)(3) of the Rights in Technical Data -Noncommercial Items at DFARS 252.227-7013 (FEB 2014) and FAR 52.227-19 (DEC 2007).

Data contained herein pertains to a commercial product and/or commercial service (as defined in FAR 2.101) and is proprietary to NetApp, Inc. All NetApp technical data and computer software provided under this Agreement is commercial in nature and developed solely at private expense. The U.S. Government has a non-exclusive, non-transferrable, nonsublicensable, worldwide, limited irrevocable license to use the Data only in connection with and in support of the U.S. Government contract under which the Data was delivered. Except as provided herein, the Data may not be used, disclosed, reproduced, modified, performed, or displayed without the prior written approval of NetApp, Inc. United States Government license rights for the Department of Defense are limited to those rights identified in DFARS clause 252.227-7015(b) (FEB 2014).

Trademark information

NETAPP, the NETAPP logo, and the marks listed at http://www.netapp.com/TM are trademarks of NetApp, Inc. Other company and product names may be trademarks of their respective owners.